TPS3702 High-Accuracy Over and Undervoltage Monitoring

1 Features

- Input Voltage Range: 2V to 18V
- High threshold accuracy:
  - 0.25% (typical)
  - 0.9% (–40°C to 125°C)
- Fixed window thresholds optimized for nominal rails between 1V and 5V
- Open-drain outputs for overvoltage and undervoltage indication
- Internal glitch immunity
- Threshold adjust using the SET pin
- Low quiescent current: 7µA (typical)
- Internal threshold hysteresis: 0.55%, 1.0%
- SOT-6 package

2 Applications

- FPGA and ASIC applications
- DSP-based systems
- Industrial control systems
- Factory automation
- Personal electronics
- Building automation
- Motor drives

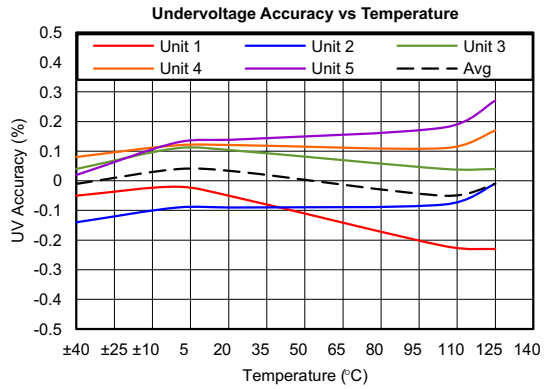

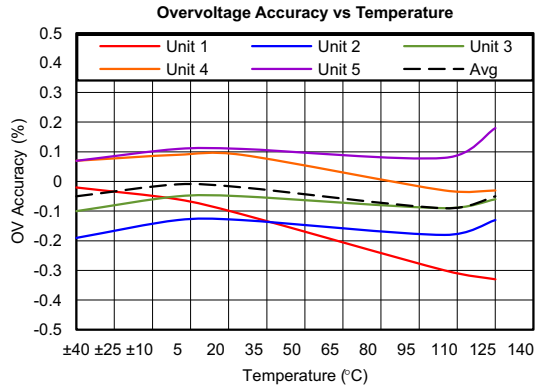

Accuracy versus Temperature

3 Description

The TPS3702 is an integrated overvoltage and undervoltage window voltage detector in a small SOT-6 package. This highly accurate voltage detector is an excellent choice for systems that operate on low-voltage supply rails and have narrow margin supply tolerances. Low threshold hysteresis options of 0.55% and 1.0% prevent false reset signals when the monitored voltage supply is in the normal range of operation. Internal glitch immunity and noise filters further eliminate false resets resulting from erroneous signals.

The TPS3702 does not require any external resistors for setting overvoltage and undervoltage reset thresholds, which further increases overall accuracy and reduces solution size and cost. The SET pin is used to select between the two available threshold voltages designed into each device. A separate SENSE input pin and VDD pin allow for the redundancy sought by safety-critical and high-reliability systems. This device also features independent reset outputs for the OV and UV pins; as a result of the open-drain configuration, UV and OV can be tied together.

This device has a low typical quiescent current specification of 7µA and is qualified for use over the industrial temperature range of –40°C to 125°C.

Device Information

PART NUMBER	PACKAGE (1)	BODY SIZE (NOM) (2)
TPS3702	SOT (6)	2.90mm × 1.60mm

(1) For all available packages, see the orderable addendum at the end of the data sheet.
(2) The package size (length × width) is a nominal value and includes pins, where applicable.

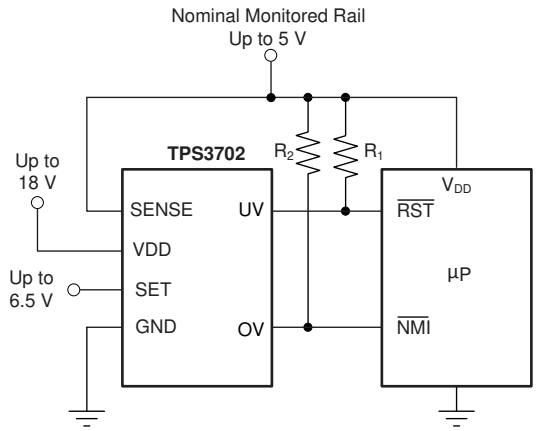

Typical Application Circuit

An IMPORTANT NOTICE at the end of this data sheet addresses availability, warranty, changes, use in safety-critical applications, intellectual property matters and other important disclaimers. PRODUCTION DATA.

Table of Contents

1 Features....1
2 Applications....1
3 Description....1
4 Pin Configuration and Functions....3
5 Specifications....4
5.1 Absolute Maximum Ratings....4
5.2 ESD Ratings....4
5.3 Recommended Operating Conditions....4
5.4 Thermal Information....4
5.5 Electrical Characteristics....5
5.6 Timing Requirements....6
5.7 Typical Characteristics....7
6 Detailed Description....10
6.1 Overview....10
6.2 Functional Block Diagram....10
6.3 Feature Description....11
6.4 Device Functional Modes....12
7 Application and Implementation....13
7.1 Application Information....13
7.2 Typical Application....17
8 Power Supply Recommendations....19
9 Layout....20
9.1 Layout Guidelines....20
9.2 Layout Example....20
10 Device and Documentation Support....21
10.1 Device Support....21
10.2 Documentation Support....22
10.3 Support Resources....22
10.4 Trademarks....22
10.5 Electrostatic Discharge Caution....22
10.6 Glossary....22
11 Revision History....22
12 Mechanical, Packaging, and Orderable Information....22

Copyright © 2024 Texas Instruments Incorporated

4 Pin Configuration and Functions

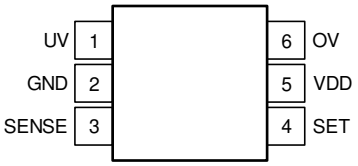

Figure 4-1. DDC Package
SOT-6
Top View

Table 4-1. Pin Functions

PIN		I/O	DESCRIPTION
NO.	NAME		
1	UV	O	Active-low, open-drain undervoltage output. This pin goes low when the SENSE voltage falls below the internally set undervoltage threshold (V_{IT-}). See the timing diagram in Figure 5-1 for more details. Connect this pin to a pull-up resistor terminated to the desired pull-up voltage.
2	GND	—	Ground
3	SENSE	I	Input for the monitored supply voltage rail. When the SENSE voltage goes below the undervoltage threshold, the UV pin is driven low. When the SENSE voltage goes above the overvoltage threshold, the OV pin is driven low.
4	SET	I	Use this pin to configure the threshold voltages. Refer to Table 10-1 for the desired configuration.
5	VDD	I	Supply voltage input pin. To power the device, connect a voltage supply (within the range of 2V and 18V) to VDD. Good analog design practice is to place a 0.1µF ceramic capacitor close to this pin.
6	OV	O	Active-low, open-drain overvoltage output. This pin goes low when the SENSE voltage rises above the internally set overvoltage threshold (V_{IT+}). See the timing diagram in Figure 5-1 for more details. Connect this pin to a pull-up resistor terminated to the desired pull-up voltage.

Copyright © 2024 Texas Instruments Incorporated

5 Specifications

5.1 Absolute Maximum Ratings

over operating free-air temperature range (unless otherwise noted)[1]

		MIN	MAX	UNIT
Voltage	V_{DD}	–0.3	20	V
	V_{UV}, V_{OV}	–0.3	20	V
	V_{SENSE}, V_{SET}	–0.3	7	V
Current	I_{UV}, I_{OV}		±40	mA
Continuous total power dissipation		See the *Section 5.4*		
Operating junction temperature, T_J [2]		–40	125	°C
Storage temperature, T_{stg}		–65	150	°C

(1) Stresses beyond those listed under *Absolute Maximum Ratings* may cause permanent damage to the device. These are stress ratings only, which do not imply functional operation of the device at these or any other conditions beyond those indicated under *Recommended Operating Conditions*. Exposure to absolute-maximum-rated conditions for extended periods may affect device reliability.
(2) As a result of the low dissipated power in this device, it is assumed that $T_J = T_A$.

5.2 ESD Ratings

			VALUE	UNIT
$V_{(ESD)}$	Electrostatic discharge	Human body model (HBM), per ANSI/ESDA/JEDEC JS-001[1]	±2000	V
		Charged device model (CDM), per JEDEC specification JESD22-C101[2]	±750	

(1) JEDEC document JEP155 states that 500V HBM allows safe manufacturing with a standard ESD control process.
(2) JEDEC document JEP157 states that 250V CDM allows safe manufacturing with a standard ESD control process.

5.3 Recommended Operating Conditions

over operating free-air temperature range (unless otherwise noted)

		MIN	NOM	MAX	UNIT
V_{DD}	Supply pin voltage	2		18	V
V_{SENSE}	Input pin voltage	0		6.5	V
V_{SET}	SET pin voltage	0		6.5	V
V_{UV}, V_{OV}	Output pin voltage	0		18	V
I_{UV}, I_{OV}	Output pin current	0.3		10	mA
R_{PU}	Pull-up resistor	2.2		10,000	kΩ

5.4 Thermal Information

THERMAL METRIC[1]		TPS3702 DDC (SOT) 6 PINS	UNIT
$R_{\theta JA}$	Junction-to-ambient thermal resistance	201.6	°C/W
$R_{\theta JC(top)}$	Junction-to-case (top) thermal resistance	47.8	°C/W
$R_{\theta JB}$	Junction-to-board thermal resistance	51.2	°C/W
ψ_{JT}	Junction-to-top characterization parameter	0.7	°C/W
ψ_{JB}	Junction-to-board characterization parameter	50.8	°C/W
$R_{\theta JC(bot)}$	Junction-to-case (bottom) thermal resistance	N/A	°C/W

(1) For more information about traditional and new thermal metrics, see the *IC Package Thermal Metrics* application report, SPRA953.

Copyright © 2024 Texas Instruments Incorporated

5.5 Electrical Characteristics

At 2V ≤ V_{DD} ≤ 18V, 1V ≤ V_{SENSE} ≤ 5V, and over the operating free-air temperature range of –40°C to 125°C, unless otherwise noted. Typical values are at T_J = 25°C.

PARAMETER		TEST CONDITIONS	MIN	TYP	MAX	UNIT
V_{DD}	Supply voltage range		2		18	V
$V_{IT+(OV)}$	Positive-going threshold accuracy	V_{SET} ≤ $V_{IL(SET)}$, V_{SET} ≥ $V_{IH(SET)}$	–0.9%	±0.25%	0.9%	
$V_{IT–(UV)}$	Negative-going threshold accuracy	V_{SET} ≤ $V_{IL(SET)}$, V_{SET} ≥ $V_{IH(SET)}$	–0.9%	±0.25%	0.9%	
V_{HYS}	Hysteresis voltage[(2)]	TPS3702x**X**x	0.3%	0.55%	0.8%	
$V_{(POR)}$	Power-on reset voltage[(1)]	$V_{OL(max)}$ = 0.25V, I_{OUT} = 15µA			0.8	V
I_{DD}	Supply current	V_{DD} = 2V		6.0	10	µA
		V_{DD} ≥ 5V		7.0	12	
I_{SENSE}	Input current, SENSE pin	V_{SENSE} = 5V		1	1.5	µA
I_{SET}	Internal pull-up current, SET pin	V_{DD} = 18V, SET pin = GND		600		nA
V_{OL}	Low-level output voltage	V_{DD} = 1.3V, I_{OUT} = 0.4mA			250	mV
		V_{DD} = 2V, I_{OUT} = 3mA			250	
		V_{DD} = 5V, I_{OUT} = 5mA			250	
$V_{IL(set)}$	Low-level SET pin input voltage				250	mV
$V_{IH(set)}$	High-level SET pin input voltage		750			mV
$I_{D(leak)}$	Open-drain output leakage current	V_{PU} = V_{DD}			300	nA
$I_{LKG(od)}$		V_{DD} = 2V, V_{PU} = 18V			300	
UVLO	Undervoltage lockout[(3)]	V_{DD} falling	1.3		1.7	V

(1) The outputs are undetermined below $V_{(POR)}$.
(2) Hysteresis is 0.55% of the nominal trip point.
(3) When V_{DD} falls below UVLO, UV is driven low and OV goes to high impedance.

Copyright © 2024 Texas Instruments Incorporated

5.6 Timing Requirements

At V_{DD} = 2V, 2.5% input overdrive[4] with R_{PU} = 10kΩ, V_{OH} = 0.9 × V_{DD}, and V_{OL} = 400mV, unless otherwise noted. R_{PU} refers to the pull-up resistor at the UV and OV pins.

		MIN	NOM	MAX	UNIT
$t_{pd(HL)}$	High-to-low propagation delay[1]		19		µs
$t_{pd(LH)}$	Low-to-high propagation delay[1]		35		µs
t_R	Output rise time[2]		2.2		µs
t_F	Output fall time[2]		0.22		µs
t_{SD}	Startup delay[3]		300		µs

(1) High-to-low and low-to-high refers to the transition at the SENSE pin
(2) Output transitions from 10% to 90% for rise times and 90% to 10% for fall times.
(3) During the power-on sequence, V_{DD} must be at or above 2V for at least t_{SD} before the output is in the correct state.
(4) Overdrive = | ($V_{(VDD)}$ / V_{IT} – 1) × 100% |.

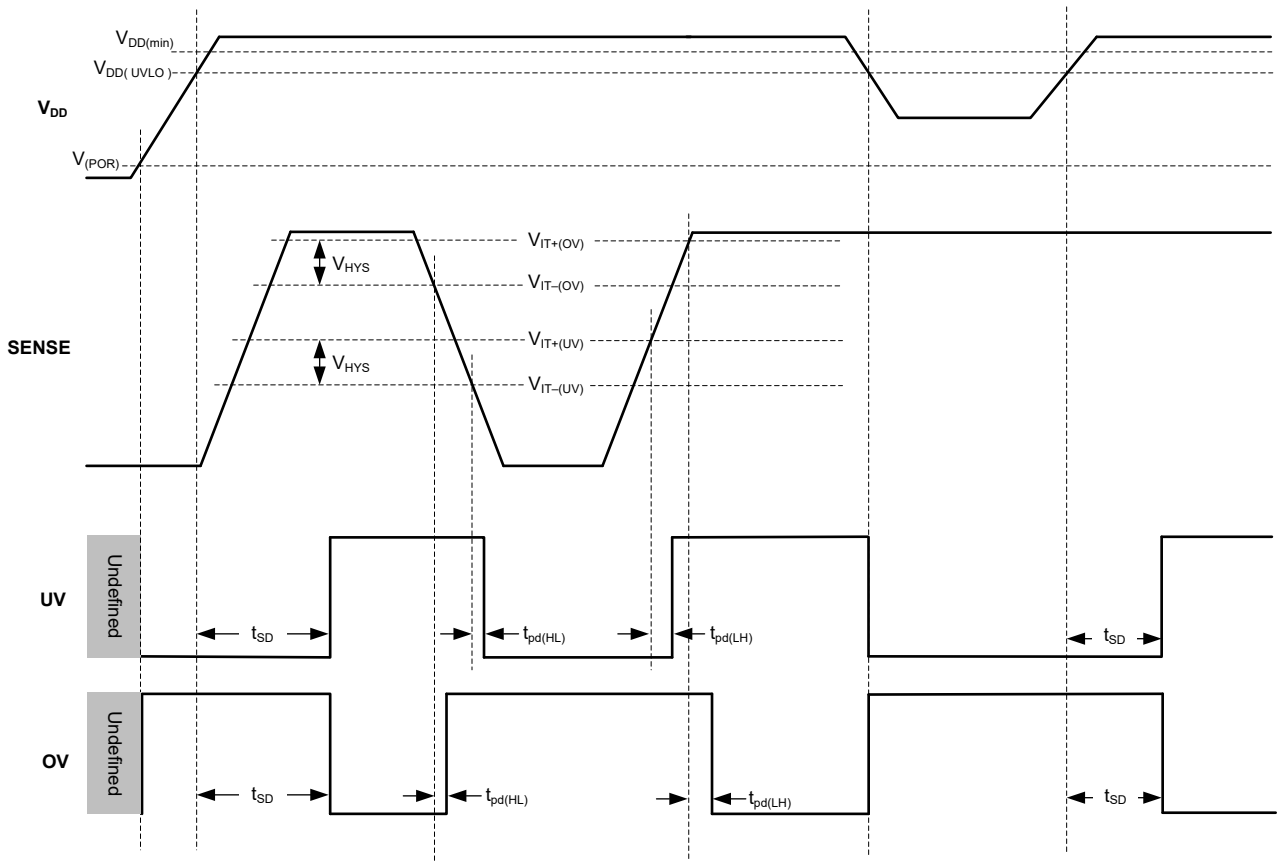

Figure 5-1. Timing Diagram

Copyright © 2024 Texas Instruments Incorporated

5.7 Typical Characteristics

At T_J = 25°C, V_{DD} = 3V, and R_{PU} = 10kΩ, unless otherwise noted.

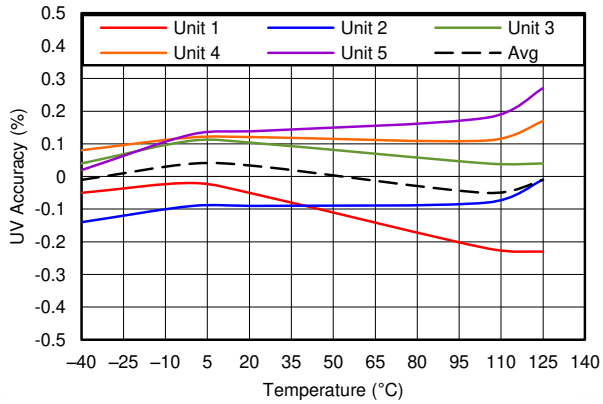

Performance is across V_{DD} with SET high or low

Figure 5-2. Undervoltage Accuracy vs Temperature

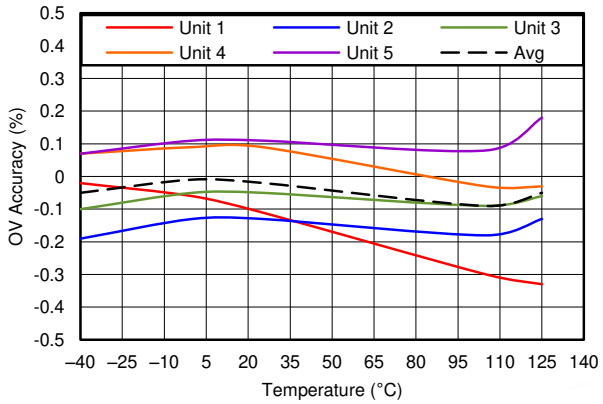

Performance is across V_{DD} with SET high or low

Figure 5-3. Overvoltage Accuracy vs Temperature

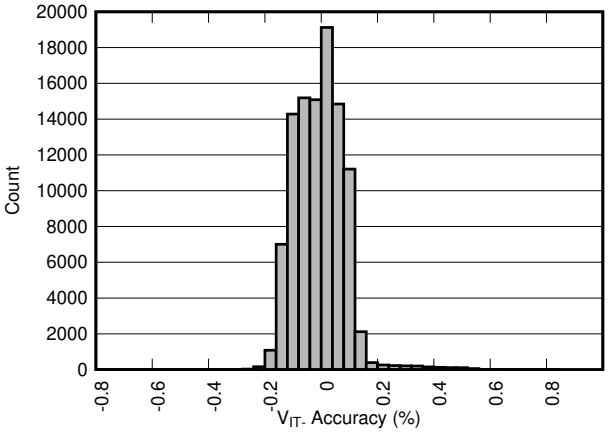

Performance is across V_{DD} with SET high or low

Figure 5-4. Undervoltage Accuracy Distribution

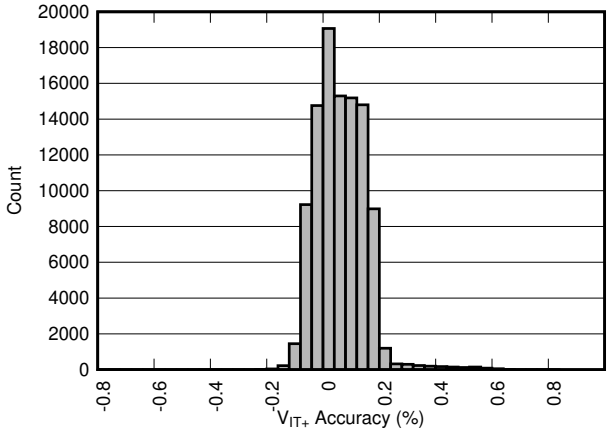

Performance is across V_{DD} with SET high or low

Figure 5-5. Overvoltage Accuracy Distribution

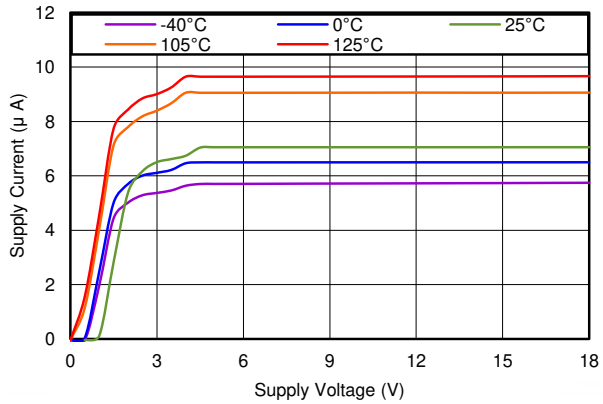

Figure 5-6. Supply Current vs Supply Voltage

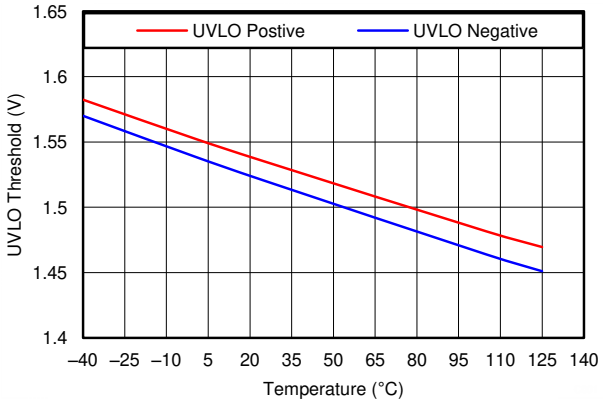

Figure 5-7. Undervoltage Lockout Threshold vs Temperature

5.7 Typical Characteristics (continued)

At T_J = 25°C, V_{DD} = 3V, and R_{PU} = 10kΩ, unless otherwise noted.

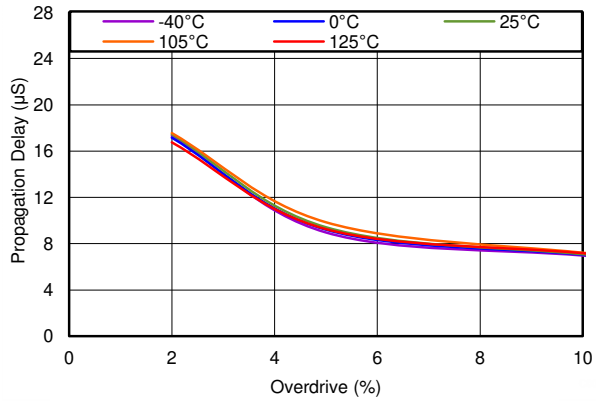

SENSE transitions from high to low

Figure 5-8. Undervoltage Propagation Delay vs Overdrive

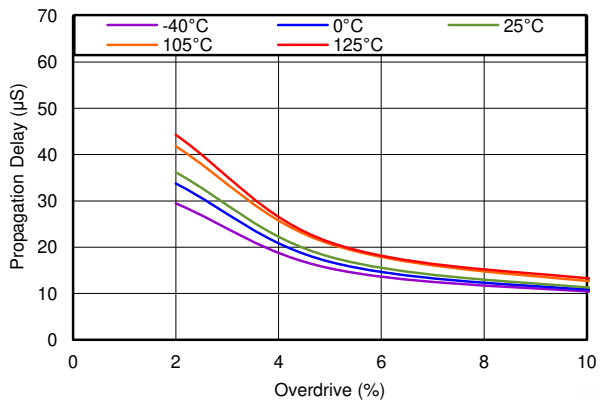

SENSE transitions from low to high

Figure 5-9. Overvoltage Propagation Delay vs Overdrive

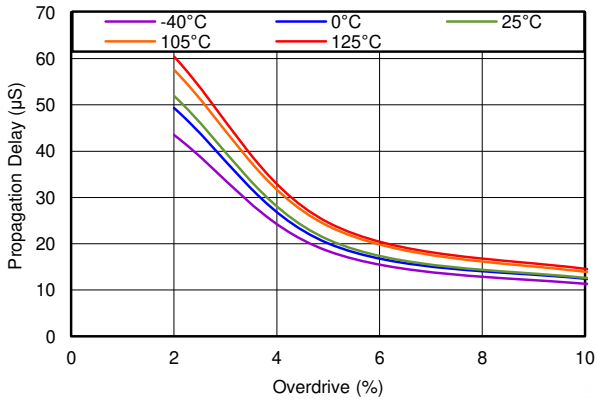

SENSE transitions from low to high

Figure 5-10. Undervoltage Propagation Delay vs Overdrive

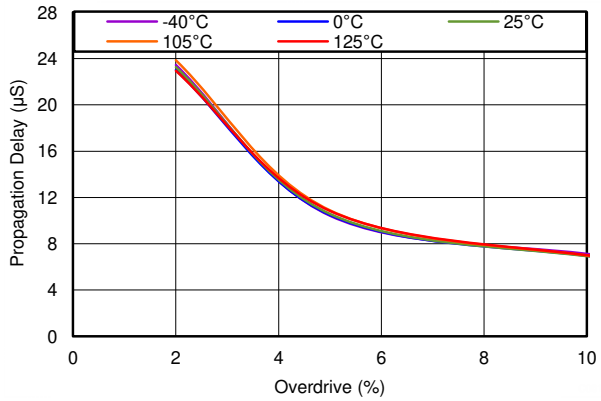

SENSE transitions from high to low

Figure 5-11. Overvoltage Propagation Delay vs Overdrive

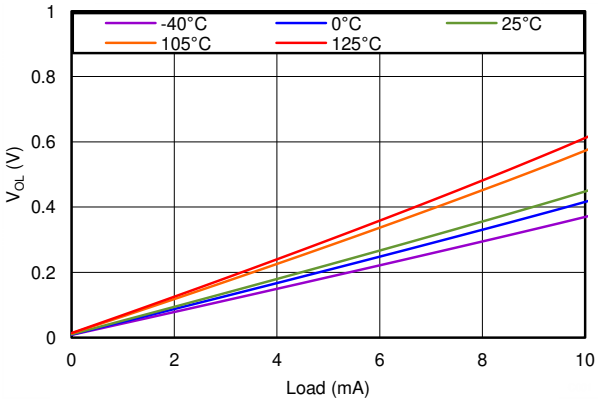

V_{DD} = 1.8V

Figure 5-12. Low-Level Output Voltage vs Output Current

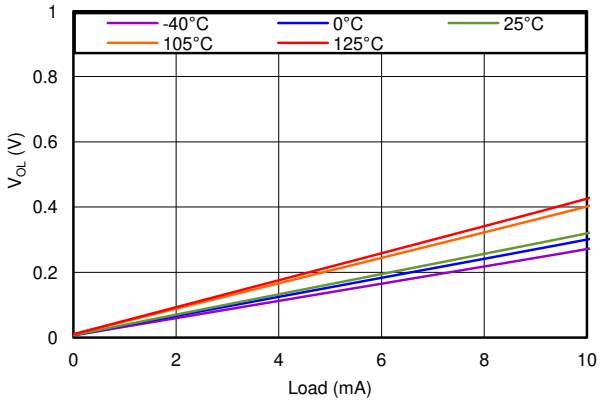

V_{DD} = 18V

Figure 5-13. Low-Level Output Voltage vs Output Current

Copyright © 2024 Texas Instruments Incorporated

5.7 Typical Characteristics (continued)

At T_J = 25°C, V_{DD} = 3V, and R_{PU} = 10kΩ, unless otherwise noted.

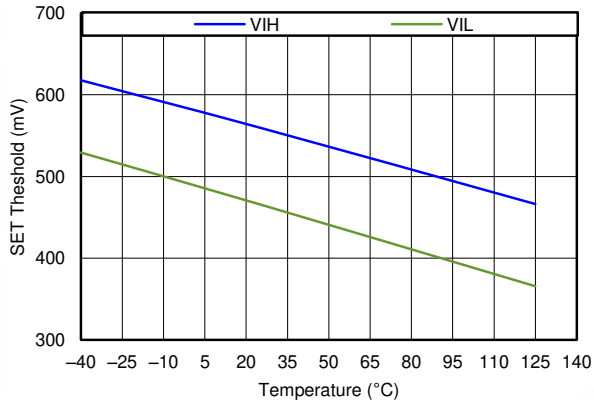

Figure 5-14. SET Threshold vs Temperature

6 Detailed Description

6.1 Overview

The TPS3702 family of devices combines two comparators and a precision reference for overvoltage and undervoltage detection. The TPS3702 features a wide supply voltage range (2V to 18V) and highly accurate window threshold voltages (0.9% over temperature). The TPS3702 is designed for systems that require an active low signal if the voltage from the monitored power supply exits the accuracy band. The outputs can be pulled up to 18V and can sink up to 10mA.

Unlike many other window voltage detectors, the TPS3702 includes the resistors used to set the overvoltage and undervoltage thresholds internal to the device. These internal resistors allow for lower component counts and greatly simplifies the design because no additional margins are needed to account for the accuracy of external resistors.

The TPS3702 is designed to assert active low output signals when the monitored voltage is outside the window band. The relationship between the monitored voltage and the states of the outputs is shown in Table 6-1.

Table 6-1. Truth Table

CONDITION	OUTPUT	STATUS
SENSE < $V_{IT-(UV)}$	UV low	UV is asserted
SENSE > $V_{IT-(UV)}$ + V_{HYS}	UV high	UV is high impedance
SENSE > $V_{IT+(OV)}$	OV low	OV is asserted
SENSE < $V_{IT+(OV)}$ – V_{HYS}	OV high	OV is high impedance

6.2 Functional Block Diagram

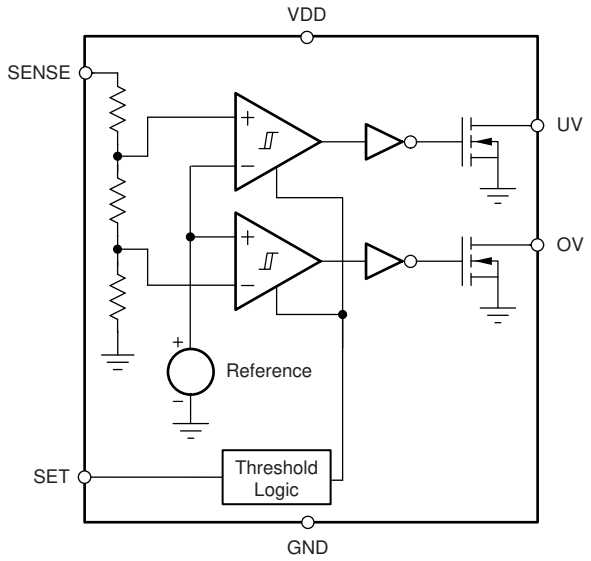

Copyright © 2024 Texas Instruments Incorporated

6.3 Feature Description

6.3.1 Input (SENSE)

The TPS3702 combines two comparators with a precision reference voltage and a trimmed resistor divider. Only a single external input is monitored by the two comparators because the resistor divider is internal to the device. This configuration optimizes device accuracy because all resistor tolerances are accounted for in the accuracy and performance specifications. Both comparators also include built-in hysteresis that provides some noise immunity and maintains stable operation.

The SENSE input can vary from ground to 6.5V (7.0V, absolute maximum), regardless of the device supply voltage used. Although not required in most cases, for noisy applications good analog design practice is to place a 1nF to 10nF bypass capacitor at the SENSE input to reduce sensitivity to transient voltages on the monitored signal.

For the undervoltage detector, the undervoltage output is driven to logic low when the SENSE voltage drops below the undervoltage falling threshold, $V_{IT-(UV)}$. When the voltage exceeds the undervoltage rising threshold, $V_{IT+(UV)}$ (which is $V_{IT-(UV)} + V_{HYS}$), the undervoltage output goes to a high-impedance state; see Figure 5-1.

For the overvoltage detector, the overvoltage output is driven to logic low when the voltage at SENSE exceeds the overvoltage rising threshold, $V_{IT+(OV)}$. When the voltage drops below the overvoltage falling threshold, $V_{IT-(OV)}$ (which is $V_{IT+(OV)} - V_{HYS}$), the overvoltage output goes to a high-impedance state; see Figure 5-1. Together, these two comparators form a window voltage detector function as described in the *Section 7.1.1* section. Also see the *Section 10.1.2* section.

6.3.2 Outputs (UV, OV)

In a typical TPS3702 application, the outputs are connected to a reset or enable input of a processor [such as a digital signal processor (DSP), application-specific integrated circuit (ASIC), or other processor type] or the outputs are connected to the enable input of a voltage regulator [such as a dc-dc converter or low-dropout regulator (LDO)].

The TPS3702 provides two open-drain outputs (UV and OV) and uses pull-up resistors to hold these lines high when the output goes to a high-impedance state. Connect the pull-up resistors to the proper voltage rails to enable the outputs to be connected to other devices at the correct interface voltage levels. The TPS3702 outputs can be pulled up to 18V, independent of the device supply voltage. To make sure of proper voltage levels, give some consideration when choosing the pull-up resistor values. The pull-up resistor value is determined by V_{OL}, output capacitive loading, and output leakage current ($I_{D(leak)}$). These values are specified in the *Section 5.5* table. Use wired-OR logic to merge the undervoltage and overvoltage signals into one logic signal that goes low if either outputs are asserted because of a fault condition.

Table 6-1 describes how the outputs are either asserted low or high impedance. See Figure 5-1 for a timing diagram that describes the relationship between the threshold voltages and the respective output.

6.3.3 User-Configurable Accuracy Band (SET)

The TPS3702 has a remarkable feature allowing each device to be set for one of two accuracy bands, Table 10-1 describes the available accuracy bands with nominal thresholds ranging from ±2% to ±10% of the monitored rail nominal voltage. Forcing the voltage on the SET pin above the high-level SET pin input voltage, $V_{IH(SET)}$, sets the thresholds for the tighter window whereas forcing the voltage on the SET pin below the low-level SET pin input voltage, $V_{IL(SET)}$, sets the thresholds for the wider window.

Using the TPS3702Cxxx as an example, when $V_{SET} \geq V_{IH(SET)}$ the nominal thresholds are set to ±4% (see Figure 6-1). Thus, when the positive-going and negative-going threshold accuracy is accounted for, the device outputs an active low signal for voltage excursions outside a ±4.9% band (worst case), which is calculated by taking the nominal threshold percentage for that given part number and adding that value to the threshold accuracy found in the *Section 5* section. Similarly, when $V_{SET} \leq V_{IL(SET)}$, the nominal thresholds are set to ±9% and the device outputs an active low signal for voltage excursions outside the ±9.9% band (worst case).

The ability for the user to change the accuracy band allows a system to programmatically change the accuracy band during certain conditions. One example is during system start up when the monitored voltage can be

Copyright © 2024 Texas Instruments Incorporated

slightly outside the typical accuracy specifications but a reset signal is not desired. In this case, V_{SET} can be set below $V_{IL(SET)}$ to detect voltage excursions outside the 10% band and, after the system is fully started up, V_{SET} can be pulled higher than $V_{IH(SET)}$, thus tightening the band to ±5%.

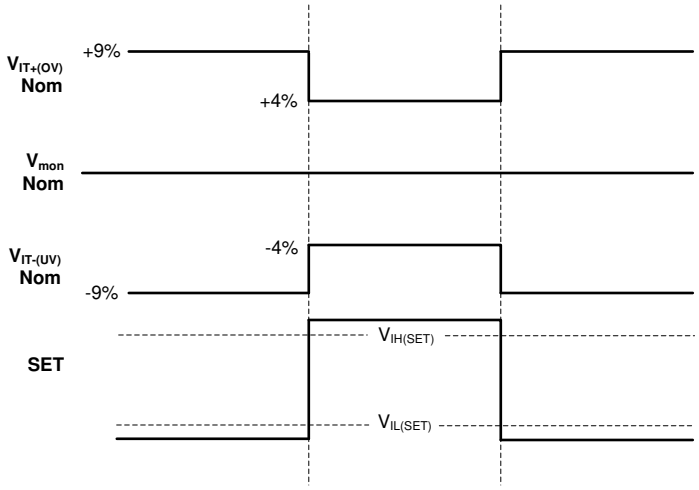

Figure 6-1. TPS3702Cxxx User-Configurable Accuracy Bands

Another benefit of allowing the user to change the accuracy band is the reduction in qualification costs. Users who have multiple rail monitoring needs (such as some rails that must be within ±5% of the nominal voltage and other rails that must be within ±10% of the same nominal voltage) benefit by only having to spend the time and money qualifying one device instead of two.

6.4 Device Functional Modes

6.4.1 Normal Operation (V_{DD} > UVLO)

When the voltage on VDD is greater than UVLO for approximately 300µs (t_{SD}), the undervoltage and overvoltage signals correspond to the voltage on the SENSE pin; see Table 6-1.

6.4.2 Undervoltage Lockout ($V_{(POR)}$ < V_{DD} < UVLO)

When the voltage on VDD is less than the device UVLO voltage but greater than the power-on reset voltage ($V_{(POR)}$), the undervoltage output is asserted and the overvoltage output is high impedance, regardless of the voltage on SENSE.

6.4.3 Power-On Reset (V_{DD} < $V_{(POR)}$)

When the voltage on VDD is lower than the required voltage to internally pull the asserted output to GND ($V_{(POR)}$), both outputs are undefined and are not to be relied upon for proper device function.

Copyright © 2024 Texas Instruments Incorporated

7 Application and Implementation

Note

Information in the following applications sections is not part of the TI component specification, and TI does not warrant its accuracy or completeness. TI's customers are responsible for determining suitability of components for their purposes, as well as validating and testing their design implementation to confirm system functionality.

7.1 Application Information

The TPS3702 is a precision window voltage detector that can be used in several different configurations. The supply voltage (V_{DD}), the monitored voltage, and the output pull-up voltage can be independent voltages or connected in many configurations. Figure 7-1 shows how the outputs operate with respect to the voltage on the SENSE pin.

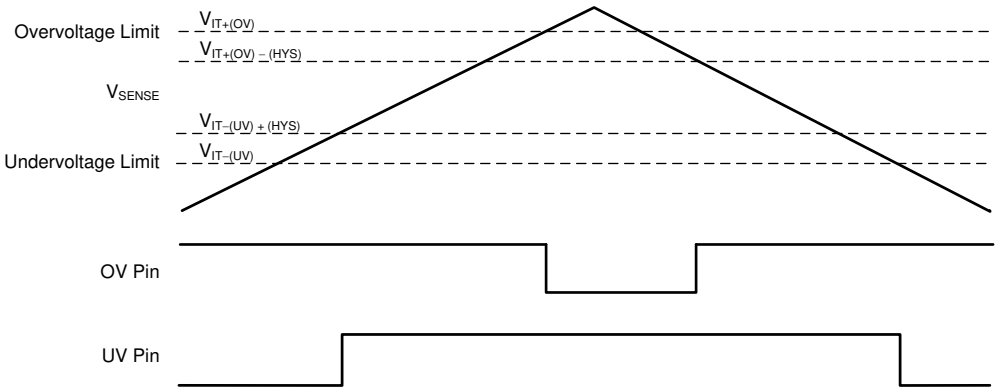

Figure 7-1. Window Voltage Detector Operation

The following sections show the connection configurations and the voltage limitations for each configuration.

7.1.1 Window Voltage Detector Considerations

The inverting and non-inverting configurations of the comparators form a window voltage detector circuit by using the internal resistor divider. The internal resistor divider allows for set voltage thresholds that already account for the tolerances of the resistors in the resistor divider. The UV and OV pins signal undervoltage and overvoltage conditions, respectively, on the SENSE pin, as shown in Figure 7-2.

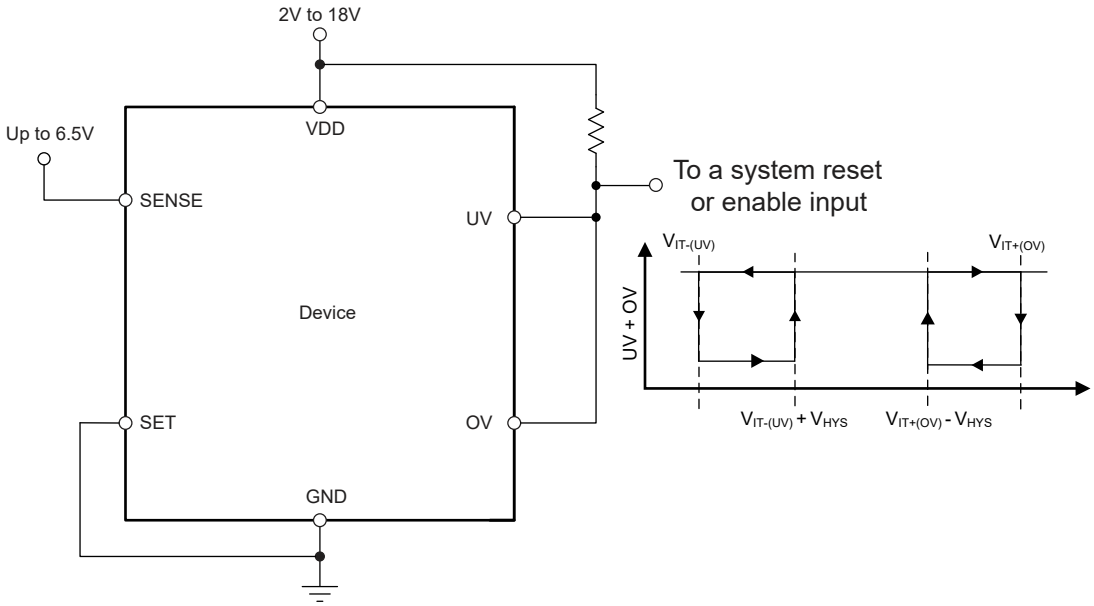

Figure 7-2. Window Voltage Detector Schematic

The TPS3702 flags the overvoltage or undervoltage conditions with the most accuracy to make sure of proper system operation. The highest accuracy threshold voltages are $V_{IT-(UV)}$ and $V_{IT+(OV)}$, and correspond with the falling SENSE undervoltage flag and the rising SENSE overvoltage flag, respectively. These thresholds represent the accuracy when the monitored voltage changes from being within the desired window (when both the undervoltage and overvoltage outputs are high) to when the monitored voltage goes outside the desired window, indicating a fault condition. If the monitored voltage is outside of the valid window (V_{SENSE} is less than the undervoltage limit, $V_{IT-(UV)}$, or greater than overvoltage limit, $V_{IT+(OV)}$), then the SENSE threshold voltages to enter into the valid window are $V_{IT+(UV)} = V_{IT-(UV)} + V_{HYS}$ or $V_{IT-(OV)} = V_{IT+(OV)} - V_{HYS}$.

Copyright © 2024 Texas Instruments Incorporated

7.1.2 Input and Output Configurations

Figure 7-3 to Figure 7-5 illustrate examples of the various input and output configurations.

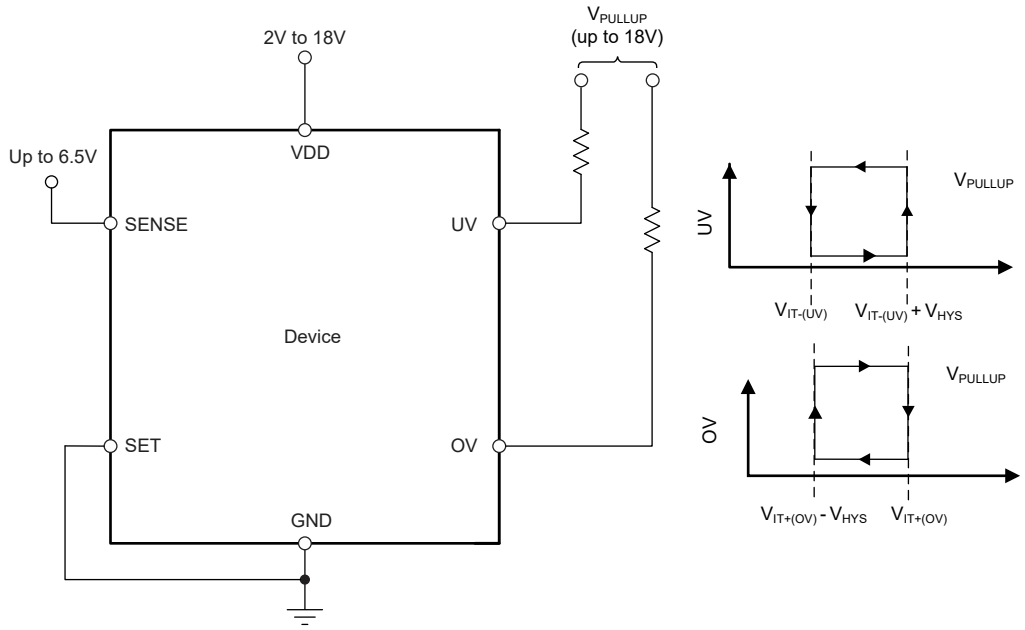

Figure 7-3. Interfacing to Voltages Other Than V_{DD}

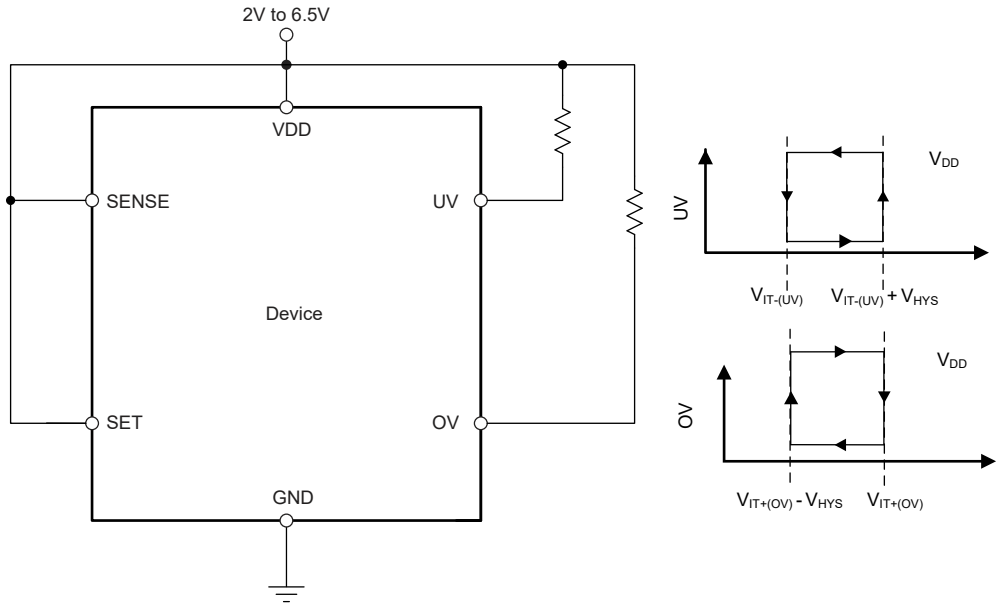

Figure 7-4. Monitoring the Same Voltage as V_{DD} with Wired-OR Logic

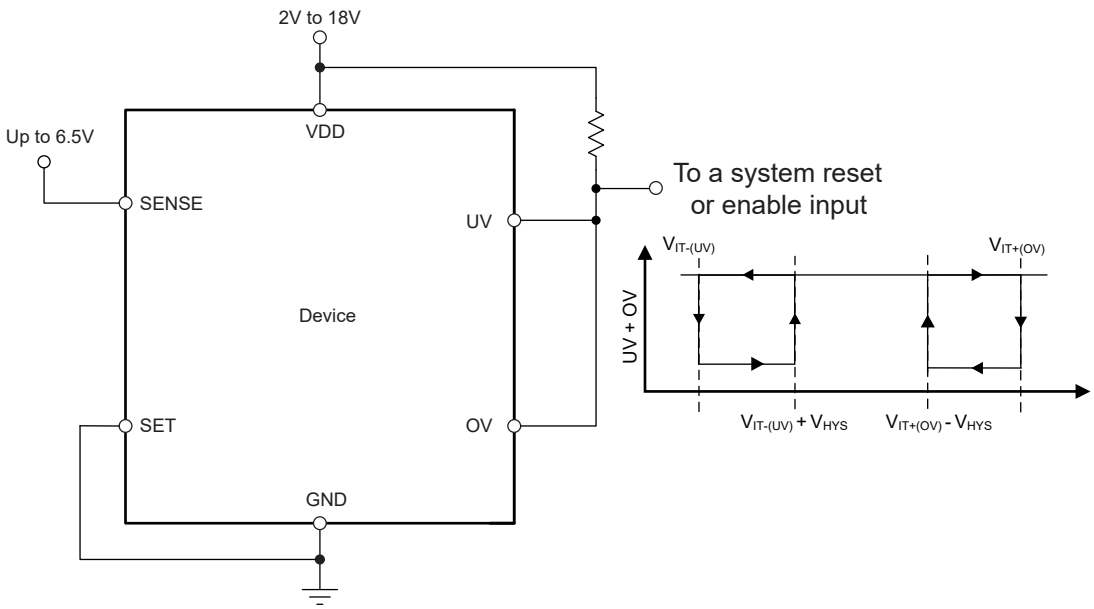

Figure 7-5. Monitoring a Voltage Other Than V_{DD} with Wired-OR Logic

Note that the SENSE input can also monitor voltages that are higher than $V_{SENSE\ (max)}$ or that may not be designed for rail voltages with the use of an external resistor divider network. If a resistor divider is used to reduce the voltage on the SENSE pin, make sure that the I_{SENSE} current is accounted for so the accuracy is not unexpectedly affected. As a general approximation, the current flowing through the resistor divider to ground must be greater than 100 times the current going into the SENSE pin. See application report *Optimizing Resistor Dividers at a Comparator Input* (SLVA450) for a more in-depth discussion on setting an external resistor divider.

7.1.3 Immunity to SENSE Pin Voltage Transients

The TPS3702 is immune to short voltage transient spikes on the input pins. Sensitivity to transients depends on both transient duration and overdrive (amplitude) of the transient.

Overdrive is defined by how much the V_{SENSE} exceeds the specified threshold, and is important to know because the smaller the overdrive, the slower the response of the outputs (UV and OV). Threshold overdrive is calculated as a percent of the threshold in question, as shown in Equation 1:

$$\text{Overdrive} = \left| \left(V_{SENSE} / V_{IT} - 1\right) \times 100\% \right| \quad (1)$$

where:

- V_{IT} is either V_{IT-} or V_{IT+} for UV or OV.

Figure 5-8 to Figure 5-11 illustrate the V_{SENSE} minimum detectable pulse versus overdrive, and can be used to visualize the relationship that overdrive has on propagation delay.

Copyright © 2024 Texas Instruments Incorporated

7.2 Typical Application

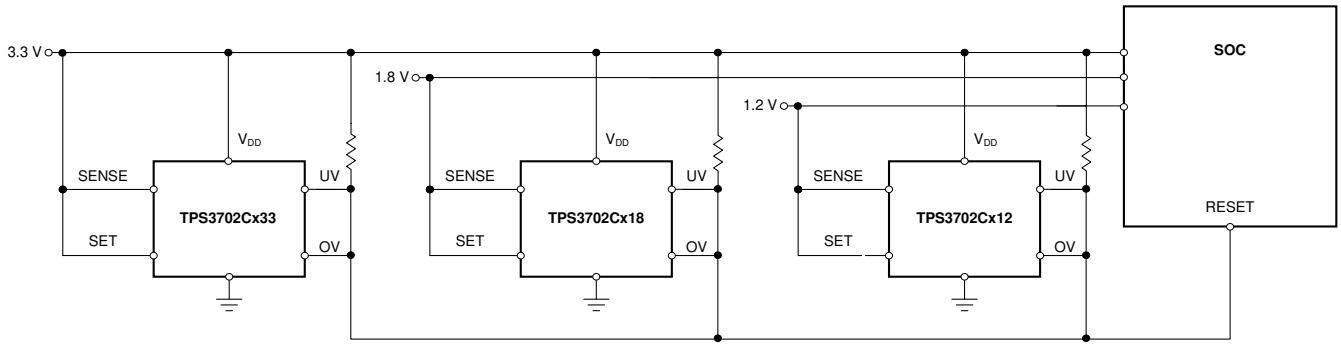

Figure 7-6. ±5% Window Voltage Detector for SOC Power Rails

7.2.1 Design Requirements

Table 7-1. Design Parameters

PARAMETER	DESIGN REQUIREMENT	DESIGN RESULT
Monitored rails	3.3V nominal, with alerts if outside of ±5% of 3.3V (including device accuracy)	Worst case $V_{IT+(OV)}$ = 3.463V (4.94%), Worst case $V_{IT-(UV)}$ = 3.139V (4.86%)
	1.8V nominal, with alerts if outside of ±5% of 1.8V (including device accuracy)	Worst case $V_{IT+(OV)}$ = 1.889V (4.94%), Worst case $V_{IT-(UV)}$ = 1.712V (4.86%)
	1.2V nominal, with alerts if outside of ±5% of 1.2V (including device accuracy)	Worst case $V_{IT+(OV)}$ = 1.259V (4.94%), Worst case $V_{IT-(UV)}$ = 1.142V (4.86%)
Output logic voltage	3.3V CMOS	3.3V CMOS
Maximum device current consumption	50µA	40.5µA (maximum), 24µA (typical)

7.2.2 Detailed Design Procedure

Determine which version of the TPS3702 best suits the application nominal rail and window tolerances. See Table 10-1 for selecting the appropriate device number for the application needs. If the nominal rail voltage to be monitored is not listed as an option, a resistor divider can be used to reduce the voltage to a nominal voltage that is available. The current I_{SENSE} causes an error in the voltage detected at the SENSE pin because the SENSE current only flows through the resistor at the top of the resistor divider. The larger the current through the resistor divider to ground, the smaller this error can be. To optimize this resistor divider, refer to application report *Optimizing Resistor Dividers at a Comparator Input* (SLVA450) for more information.

When the outputs switch to the high-Z state, the rise time of the UV or OV node depends on the pull-up resistance and the capacitance on that node. Choose pull-up resistors that satisfy both the downstream timing requirements and the sink current required to have a V_{OL} low enough for the application; 10kΩ to 1MΩ resistors are a good choice for low-capacitive loads.

Copyright © 2024 Texas Instruments Incorporated

7.2.3 Application Curves

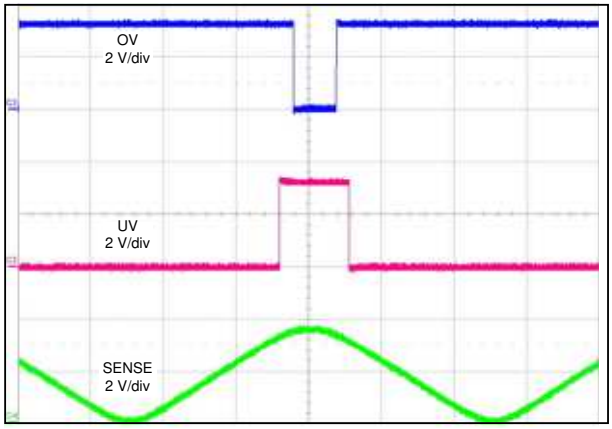

V_{SENSE} goes from 0V to 3.47V ($V_{IT+(OV)}$), V_{DD} = 3.3V, $V_{PULL-UP}$ = 3.3V

Figure 7-7. TPS3702CX33 Window Voltage Detector Function

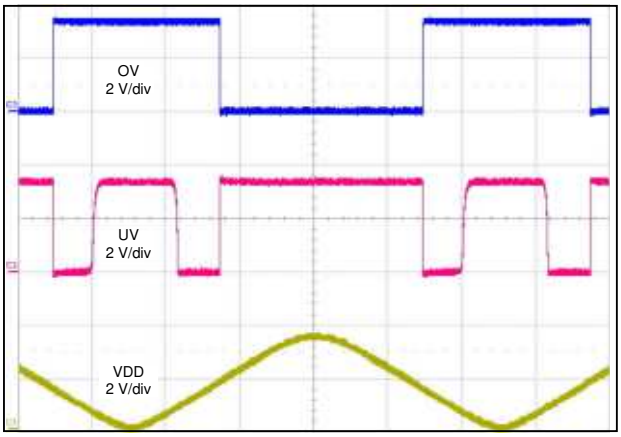

V_{DD} goes from 0V to 3.3V, V_{SENSE} = 3.47V (above $V_{IT+(OV)}$)

Figure 7-8. TPS3702CX33 Startup with $V_{PULL-UP}$ = 3V

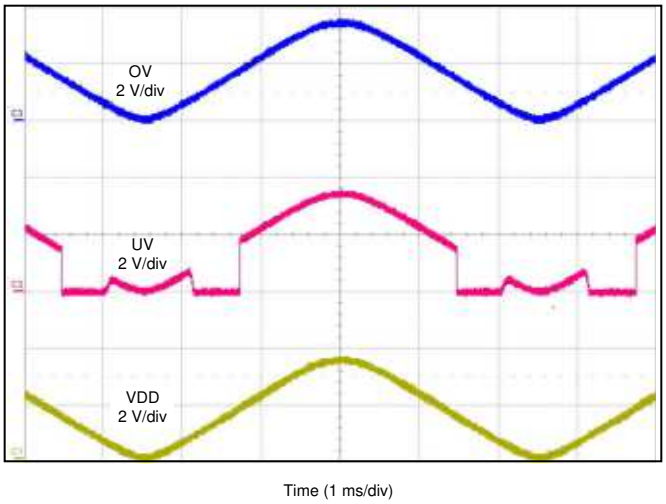

V_{DD} goes from 0V to 3.3V, V_{SENSE} = 3.3V

Figure 7-9. TPS3702CX33 Startup with $V_{PULL-UP}$ = V_{DD}

Copyright © 2024 Texas Instruments Incorporated

8 Power Supply Recommendations

The TPS3702 is designed to operate from an input voltage supply range between 2V and 18V. An input supply capacitor is not required for this device; however, if the input supply is noisy good analog practice is to place a 0.1µF capacitor between the VDD pin and the GND pin. This device has a 20V absolute maximum rating on the VDD pin. If the voltage supply providing power to VDD is susceptible to any large voltage transient that can exceed 20V, additional precautions must be taken.

Copyright © 2024 Texas Instruments Incorporated

9 Layout

9.1 Layout Guidelines

- Place the VDD decoupling capacitor close to the device.
- Avoid using long traces for the VDD supply node. The VDD capacitor (C_{VDD}), along with parasitic inductance from the supply to the capacitor, can form an LC tank and create ringing with peak voltages above the maximum VDD voltage.

9.2 Layout Example

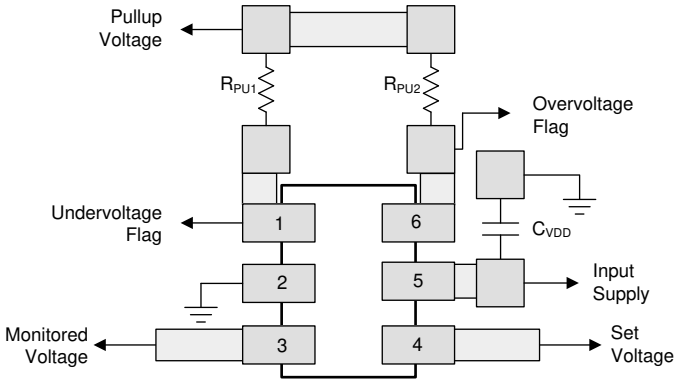

Figure 9-1. Recommended Layout

Copyright © 2024 Texas Instruments Incorporated

10 Device and Documentation Support

10.1 Device Support

10.1.1 Development Support

10.1.1.1 Evaluation Module

An evaluation module (EVM) is available to assist in the initial circuit performance evaluation using the TPS3702. The TPS3702CX33EVM-683 evaluation module (and related user guide) can be requested at the Texas Instruments website through the product folders or purchased directly from the TI eStore.

10.1.2 Device Nomenclature

Table 10-1 shows how to decode the function of the device based on the part number, with TPS3702CX33 used as an example.

Table 10-1. Device Naming Convention

DESCRIPTION	NOMENCLATURE	VALUE
TPS3702 (high-accuracy window voltage detector family)	—	—
C (nominal thresholds as a percent of the nominal monitored voltage)	A	SET pin high = ±2%, SET pin low = ±6%
	B	SET pin high = ±3%, SET pin low = ±7%
	C	SET pin high = ±4%, SET pin low = ±9%
	D	SET pin high = ±5%, SET pin low = ±10%
X (hysteresis option)	X	0.55%
	Y	1.0%
33 (nominal monitored voltage option)	10	1.0V
	12	1.2V
	18	1.8V
	33	3.3V
	50	5.0V

Table 10-2 shows the released versions of the TPS3702, including the nominal undervoltage and overvoltage thresholds. Contact the factory for details and availability of other options shown in Table 10-1; minimum order quantities apply.

Table 10-2. Released Device Thresholds

PRODUCT	NOMINAL SUPPLY (V)	HYSTERESIS (%)	UV THRESHOLD (V) SET ≤ $V_{IL(SET)}$	UV THRESHOLD (V) SET ≥ $V_{IH(SET)}$	OV THRESHOLD (V) SET ≤ $V_{IL(SET)}$	OV THRESHOLD (V) SET ≥ $V_{IH(SET)}$
TPS3702CX10	1.0	0.5	0.91	0.96	1.09	1.04
TPS3702CX12	1.2	0.5	1.09	1.15	1.31	1.25
TPS3702AX18	1.8	0.5	1.69	1.76	1.91	1.84
TPS3702CX18	1.8	0.5	1.64	1.73	1.96	1.87
TPS3702AX33	3.3	0.5	3.10	3.23	3.50	3.37
TPS3702CX33	3.3	0.5	3.00	3.17	3.60	3.43
TPS3702CX50	5.0	0.5	4.55	4.80	5.45	5.20

Copyright © 2024 Texas Instruments Incorporated

10.2 Documentation Support

10.2.1 Related Documentation

Optimizing Resistor Dividers at a Comparator Input, SLVA450

TPS3702CX33EVM-683 Evaluation Module, SBVU026

10.3 Support Resources

TI E2E™ support forums are an engineer's go-to source for fast, verified answers and design help — straight from the experts. Search existing answers or ask your own question to get the quick design help you need.

Linked content is provided "AS IS" by the respective contributors. They do not constitute TI specifications and do not necessarily reflect TI's views; see TI's Terms of Use.

10.4 Trademarks

TI E2E™ is a trademark of Texas Instruments.
All trademarks are the property of their respective owners.

10.5 Electrostatic Discharge Caution

This integrated circuit can be damaged by ESD. Texas Instruments recommends that all integrated circuits be handled with appropriate precautions. Failure to observe proper handling and installation procedures can cause damage.

ESD damage can range from subtle performance degradation to complete device failure. Precision integrated circuits may be more susceptible to damage because very small parametric changes could cause the device not to meet its published specifications.

10.6 Glossary

TI Glossary This glossary lists and explains terms, acronyms, and definitions.

11 Revision History

Changes from Revision * (January 2015) to Revision A (February 2024)	Page
• Changed device naming to "voltage detector" throughout data sheet	1
• Updated the numbering format for tables, figures, and cross-references throughout the document	1
• Changed first two sentences of Description section	1
• Updated timing diagram	6
• Changed device naming to voltage detector	10
• Updated images for Input and Output Configurations	15

12 Mechanical, Packaging, and Orderable Information

The following pages include mechanical, packaging, and orderable information. This information is the most current data available for the designated devices. This data is subject to change without notice and revision of this document. For browser-based versions of this data sheet, refer to the left-hand navigation.

Copyright © 2024 Texas Instruments Incorporated

PACKAGING INFORMATION

Orderable part number	Status (1)	Material type (2)	Package | Pins	Package qty | Carrier	RoHS (3)	Lead finish/ Ball material (4)	MSL rating/ Peak reflow (5)	Op temp (°C)	Part marking (6)
TPS3702AX18DDCR	Active	Production	SOT-23-THIN (DDC) | 6	3000 | LARGE T&R	Yes	NIPDAU	Level-2-260C-1 YEAR	-40 to 125	ZAUO
TPS3702AX18DDCR.A	Active	Production	SOT-23-THIN (DDC) | 6	3000 | LARGE T&R	Yes	NIPDAU	Level-2-260C-1 YEAR	-40 to 125	ZAUO
TPS3702AX18DDCT	Active	Production	SOT-23-THIN (DDC) | 6	250 | SMALL T&R	Yes	NIPDAU	Level-2-260C-1 YEAR	-40 to 125	ZAUO
TPS3702AX18DDCT.A	Active	Production	SOT-23-THIN (DDC) | 6	250 | SMALL T&R	Yes	NIPDAU	Level-2-260C-1 YEAR	-40 to 125	ZAUO
TPS3702AX33DDCR	Active	Production	SOT-23-THIN (DDC) | 6	3000 | LARGE T&R	Yes	NIPDAU	Level-2-260C-1 YEAR	-40 to 125	ZAPO
TPS3702AX33DDCR.A	Active	Production	SOT-23-THIN (DDC) | 6	3000 | LARGE T&R	Yes	NIPDAU	Level-2-260C-1 YEAR	-40 to 125	ZAPO
TPS3702AX33DDCT	Active	Production	SOT-23-THIN (DDC) | 6	250 | SMALL T&R	Yes	NIPDAU	Level-2-260C-1 YEAR	-40 to 125	ZAPO
TPS3702AX33DDCT.A	Active	Production	SOT-23-THIN (DDC) | 6	250 | SMALL T&R	Yes	NIPDAU	Level-2-260C-1 YEAR	-40 to 125	ZAPO
TPS3702CX10DDCR	Active	Production	SOT-23-THIN (DDC) | 6	3000 | LARGE T&R	Yes	NIPDAU	Level-2-260C-1 YEAR	-40 to 125	ZARO
TPS3702CX10DDCR.A	Active	Production	SOT-23-THIN (DDC) | 6	3000 | LARGE T&R	Yes	NIPDAU	Level-2-260C-1 YEAR	-40 to 125	ZARO
TPS3702CX10DDCT	Active	Production	SOT-23-THIN (DDC) | 6	250 | SMALL T&R	Yes	NIPDAU	Level-2-260C-1 YEAR	-40 to 125	ZARO
TPS3702CX10DDCT.A	Active	Production	SOT-23-THIN (DDC) | 6	250 | SMALL T&R	Yes	NIPDAU	Level-2-260C-1 YEAR	-40 to 125	ZARO
TPS3702CX12DDCR	Active	Production	SOT-23-THIN (DDC) | 6	3000 | LARGE T&R	Yes	NIPDAU	Level-2-260C-1 YEAR	-40 to 125	ZAVO
TPS3702CX12DDCR.A	Active	Production	SOT-23-THIN (DDC) | 6	3000 | LARGE T&R	Yes	NIPDAU	Level-2-260C-1 YEAR	-40 to 125	ZAVO
TPS3702CX12DDCT	Active	Production	SOT-23-THIN (DDC) | 6	250 | SMALL T&R	Yes	NIPDAU	Level-2-260C-1 YEAR	-40 to 125	ZAVO
TPS3702CX12DDCT.A	Active	Production	SOT-23-THIN (DDC) | 6	250 | SMALL T&R	Yes	NIPDAU	Level-2-260C-1 YEAR	-40 to 125	ZAVO

Orderable part number	Status (1)	Material type (2)	Package | Pins	Package qty | Carrier	RoHS (3)	Lead finish/ Ball material (4)	MSL rating/ Peak reflow (5)	Op temp (°C)	Part marking (6)
TPS3702CX18DDCR	Active	Production	SOT-23-THIN (DDC) | 6	3000 | LARGE T&R	Yes	NIPDAU	Level-2-260C-1 YEAR	-40 to 125	ZAWO
TPS3702CX18DDCR.A	Active	Production	SOT-23-THIN (DDC) | 6	3000 | LARGE T&R	Yes	NIPDAU	Level-2-260C-1 YEAR	-40 to 125	ZAWO
TPS3702CX18DDCRG4	Active	Production	SOT-23-THIN (DDC) | 6	3000 | LARGE T&R	Yes	NIPDAU	Level-2-260C-1 YEAR	-40 to 125	ZAWO
TPS3702CX18DDCRG4.A	Active	Production	SOT-23-THIN (DDC) | 6	3000 | LARGE T&R	Yes	NIPDAU	Level-2-260C-1 YEAR	-40 to 125	ZAWO
TPS3702CX18DDCT	Active	Production	SOT-23-THIN (DDC) | 6	250 | SMALL T&R	Yes	NIPDAU	Level-2-260C-1 YEAR	-40 to 125	ZAWO
TPS3702CX18DDCT.A	Active	Production	SOT-23-THIN (DDC) | 6	250 | SMALL T&R	Yes	NIPDAU	Level-2-260C-1 YEAR	-40 to 125	ZAWO
TPS3702CX33DDCR	Active	Production	SOT-23-THIN (DDC) | 6	3000 | LARGE T&R	Yes	NIPDAU	Level-2-260C-1 YEAR	-40 to 125	ZAQO
TPS3702CX33DDCR.A	Active	Production	SOT-23-THIN (DDC) | 6	3000 | LARGE T&R	Yes	NIPDAU	Level-2-260C-1 YEAR	-40 to 125	ZAQO
TPS3702CX33DDCT	Active	Production	SOT-23-THIN (DDC) | 6	250 | SMALL T&R	Yes	NIPDAU	Level-2-260C-1 YEAR	-40 to 125	ZAQO
TPS3702CX33DDCT.A	Active	Production	SOT-23-THIN (DDC) | 6	250 | SMALL T&R	Yes	NIPDAU	Level-2-260C-1 YEAR	-40 to 125	ZAQO
TPS3702CX33DDCTG4	Active	Production	SOT-23-THIN (DDC) | 6	250 | SMALL T&R	Yes	NIPDAU	Level-2-260C-1 YEAR	-40 to 125	ZAQO
TPS3702CX33DDCTG4.A	Active	Production	SOT-23-THIN (DDC) | 6	250 | SMALL T&R	Yes	NIPDAU	Level-2-260C-1 YEAR	-40 to 125	ZAQO
TPS3702CX50DDCR	Active	Production	SOT-23-THIN (DDC) | 6	3000 | LARGE T&R	Yes	NIPDAU	Level-2-260C-1 YEAR	-40 to 125	ZASO
TPS3702CX50DDCR.A	Active	Production	SOT-23-THIN (DDC) | 6	3000 | LARGE T&R	Yes	NIPDAU	Level-2-260C-1 YEAR	-40 to 125	ZASO
TPS3702CX50DDCT	Active	Production	SOT-23-THIN (DDC) | 6	250 | SMALL T&R	Yes	NIPDAU	Level-2-260C-1 YEAR	-40 to 125	ZASO
TPS3702CX50DDCT.A	Active	Production	SOT-23-THIN (DDC) | 6	250 | SMALL T&R	Yes	NIPDAU	Level-2-260C-1 YEAR	-40 to 125	ZASO
TPS3702CX50DDCTG4	Active	Production	SOT-23-THIN (DDC) | 6	250 | SMALL T&R	Yes	NIPDAU	Level-2-260C-1 YEAR	-40 to 125	ZASO

Orderable part number	Status (1)	Material type (2)	Package | Pins	Package qty | Carrier	RoHS (3)	Lead finish/ Ball material (4)	MSL rating/ Peak reflow (5)	Op temp (°C)	Part marking (6)
TPS3702CX50DDCTG4.A	Active	Production	SOT-23-THIN (DDC) | 6	250 | SMALL T&R	Yes	NIPDAU	Level-2-260C-1 YEAR	-40 to 125	ZASO

(1) **Status:** For more details on status, see our product life cycle.

(2) **Material type:** When designated, preproduction parts are prototypes/experimental devices, and are not yet approved or released for full production. Testing and final process, including without limitation quality assurance, reliability performance testing, and/or process qualification, may not yet be complete, and this item is subject to further changes or possible discontinuation. If available for ordering, purchases will be subject to an additional waiver at checkout, and are intended for early internal evaluation purposes only. These items are sold without warranties of any kind.

(3) **RoHS values:** Yes, No, RoHS Exempt. See the TI RoHS Statement for additional information and value definition.

(4) **Lead finish/Ball material:** Parts may have multiple material finish options. Finish options are separated by a vertical ruled line. Lead finish/Ball material values may wrap to two lines if the finish value exceeds the maximum column width.

(5) **MSL rating/Peak reflow:** The moisture sensitivity level ratings and peak solder (reflow) temperatures. In the event that a part has multiple moisture sensitivity ratings, only the lowest level per JEDEC standards is shown. Refer to the shipping label for the actual reflow temperature that will be used to mount the part to the printed circuit board.

(6) **Part marking:** There may be an additional marking, which relates to the logo, the lot trace code information, or the environmental category of the part.

Multiple part markings will be inside parentheses. Only one part marking contained in parentheses and separated by a "~" will appear on a part. If a line is indented then it is a continuation of the previous line and the two combined represent the entire part marking for that device.

Important Information and Disclaimer: The information provided on this page represents TI's knowledge and belief as of the date that it is provided. TI bases its knowledge and belief on information provided by third parties, and makes no representation or warranty as to the accuracy of such information. Efforts are underway to better integrate information from third parties. TI has taken and continues to take reasonable steps to provide representative and accurate information but may not have conducted destructive testing or chemical analysis on incoming materials and chemicals. TI and TI suppliers consider certain information to be proprietary, and thus CAS numbers and other limited information may not be available for release.

In no event shall TI's liability arising out of such information exceed the total purchase price of the TI part(s) at issue in this document sold by TI to Customer on an annual basis.

OTHER QUALIFIED VERSIONS OF TPS3702 :

- Automotive : TPS3702-Q1

NOTE: Qualified Version Definitions:

- Automotive - Q100 devices qualified for high-reliability automotive applications targeting zero defects

TAPE AND REEL INFORMATION

REEL DIMENSIONS

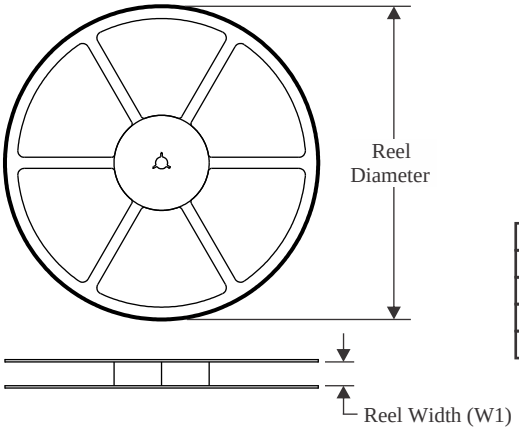

TAPE DIMENSIONS

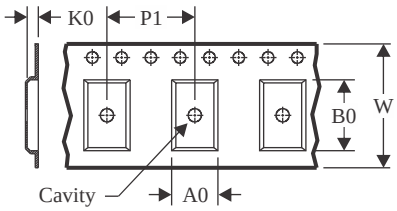

A0	Dimension designed to accommodate the component width
B0	Dimension designed to accommodate the component length
K0	Dimension designed to accommodate the component thickness
W	Overall width of the carrier tape
P1	Pitch between successive cavity centers

QUADRANT ASSIGNMENTS FOR PIN 1 ORIENTATION IN TAPE

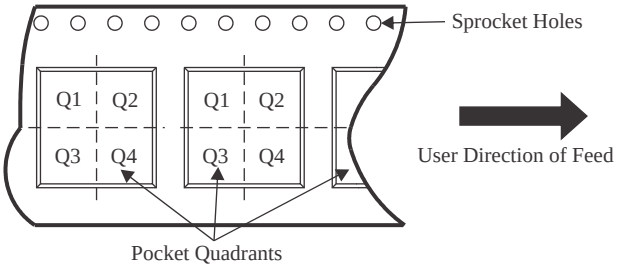

*All dimensions are nominal

Device	Package Type	Package Drawing	Pins	SPQ	Reel Diameter (mm)	Reel Width W1 (mm)	A0 (mm)	B0 (mm)	K0 (mm)	P1 (mm)	W (mm)	Pin1 Quadrant
TPS3702AX18DDCR	SOT-23-THIN	DDC	6	3000	179.0	8.4	3.2	3.2	1.4	4.0	8.0	Q3
TPS3702AX18DDCT	SOT-23-THIN	DDC	6	250	179.0	8.4	3.2	3.2	1.4	4.0	8.0	Q3
TPS3702AX33DDCR	SOT-23-THIN	DDC	6	3000	179.0	8.4	3.2	3.2	1.4	4.0	8.0	Q3
TPS3702AX33DDCT	SOT-23-THIN	DDC	6	250	180.0	8.4	3.2	3.2	1.4	4.0	8.0	Q3
TPS3702CX10DDCR	SOT-23-THIN	DDC	6	3000	179.0	8.4	3.2	3.2	1.4	4.0	8.0	Q3
TPS3702CX10DDCT	SOT-23-THIN	DDC	6	250	179.0	8.4	3.2	3.2	1.4	4.0	8.0	Q3
TPS3702CX12DDCR	SOT-23-THIN	DDC	6	3000	179.0	8.4	3.2	3.2	1.4	4.0	8.0	Q3
TPS3702CX12DDCT	SOT-23-THIN	DDC	6	250	179.0	8.4	3.2	3.2	1.4	4.0	8.0	Q3
TPS3702CX18DDCR	SOT-23-THIN	DDC	6	3000	179.0	8.4	3.2	3.2	1.4	4.0	8.0	Q3

Device	Package Type	Package Drawing	Pins	SPQ	Reel Diameter (mm)	Reel Width W1 (mm)	A0 (mm)	B0 (mm)	K0 (mm)	P1 (mm)	W (mm)	Pin1 Quadrant
TPS3702CX18DDCRG4	SOT-23-THIN	DDC	6	3000	179.0	8.4	3.2	3.2	1.4	4.0	8.0	Q3
TPS3702CX18DDCT	SOT-23-THIN	DDC	6	250	179.0	8.4	3.2	3.2	1.4	4.0	8.0	Q3
TPS3702CX33DDCR	SOT-23-THIN	DDC	6	3000	180.0	8.4	3.2	3.2	1.4	4.0	8.0	Q3
TPS3702CX33DDCT	SOT-23-THIN	DDC	6	250	180.0	8.4	3.2	3.2	1.4	4.0	8.0	Q3
TPS3702CX33DDCTG4	SOT-23-THIN	DDC	6	250	180.0	8.4	3.2	3.2	1.4	4.0	8.0	Q3
TPS3702CX50DDCR	SOT-23-THIN	DDC	6	3000	179.0	8.4	3.2	3.2	1.4	4.0	8.0	Q3
TPS3702CX50DDCT	SOT-23-THIN	DDC	6	250	180.0	8.4	3.2	3.2	1.4	4.0	8.0	Q3
TPS3702CX50DDCTG4	SOT-23-THIN	DDC	6	250	180.0	8.4	3.2	3.2	1.4	4.0	8.0	Q3

TAPE AND REEL BOX DIMENSIONS

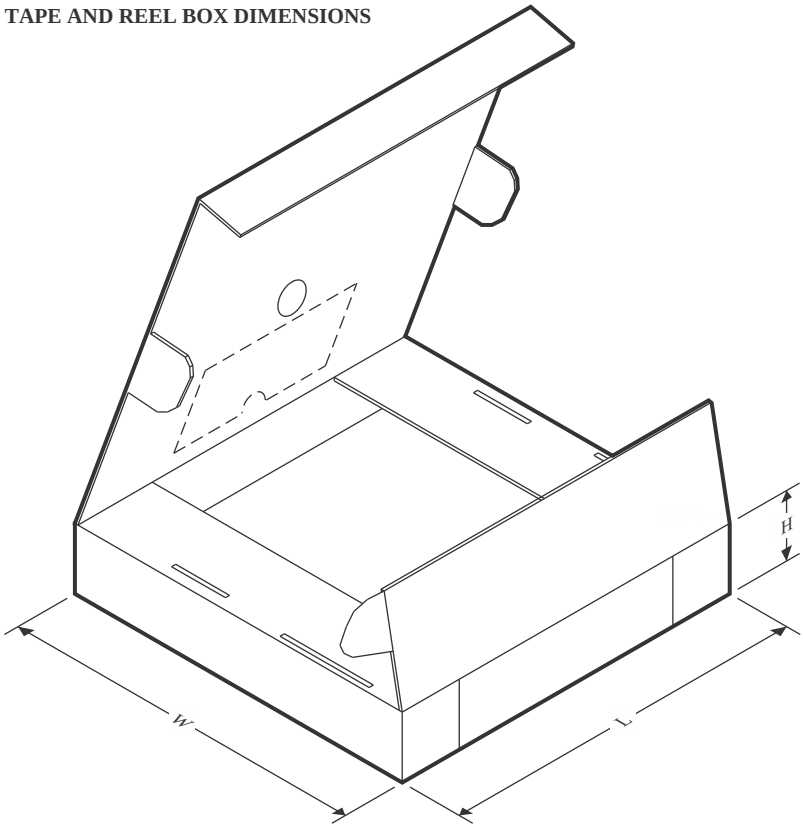

*All dimensions are nominal

Device	Package Type	Package Drawing	Pins	SPQ	Length (mm)	Width (mm)	Height (mm)
TPS3702AX18DDCR	SOT-23-THIN	DDC	6	3000	213.0	191.0	35.0
TPS3702AX18DDCT	SOT-23-THIN	DDC	6	250	213.0	191.0	35.0
TPS3702AX33DDCR	SOT-23-THIN	DDC	6	3000	213.0	191.0	35.0
TPS3702AX33DDCT	SOT-23-THIN	DDC	6	250	213.0	191.0	35.0
TPS3702CX10DDCR	SOT-23-THIN	DDC	6	3000	213.0	191.0	35.0
TPS3702CX10DDCT	SOT-23-THIN	DDC	6	250	213.0	191.0	35.0
TPS3702CX12DDCR	SOT-23-THIN	DDC	6	3000	213.0	191.0	35.0
TPS3702CX12DDCT	SOT-23-THIN	DDC	6	250	213.0	191.0	35.0
TPS3702CX18DDCR	SOT-23-THIN	DDC	6	3000	213.0	191.0	35.0
TPS3702CX18DDCRG4	SOT-23-THIN	DDC	6	3000	213.0	191.0	35.0
TPS3702CX18DDCT	SOT-23-THIN	DDC	6	250	213.0	191.0	35.0
TPS3702CX33DDCR	SOT-23-THIN	DDC	6	3000	213.0	191.0	35.0
TPS3702CX33DDCT	SOT-23-THIN	DDC	6	250	213.0	191.0	35.0
TPS3702CX33DDCTG4	SOT-23-THIN	DDC	6	250	213.0	191.0	35.0
TPS3702CX50DDCR	SOT-23-THIN	DDC	6	3000	213.0	191.0	35.0
TPS3702CX50DDCT	SOT-23-THIN	DDC	6	250	213.0	191.0	35.0
TPS3702CX50DDCTG4	SOT-23-THIN	DDC	6	250	213.0	191.0	35.0

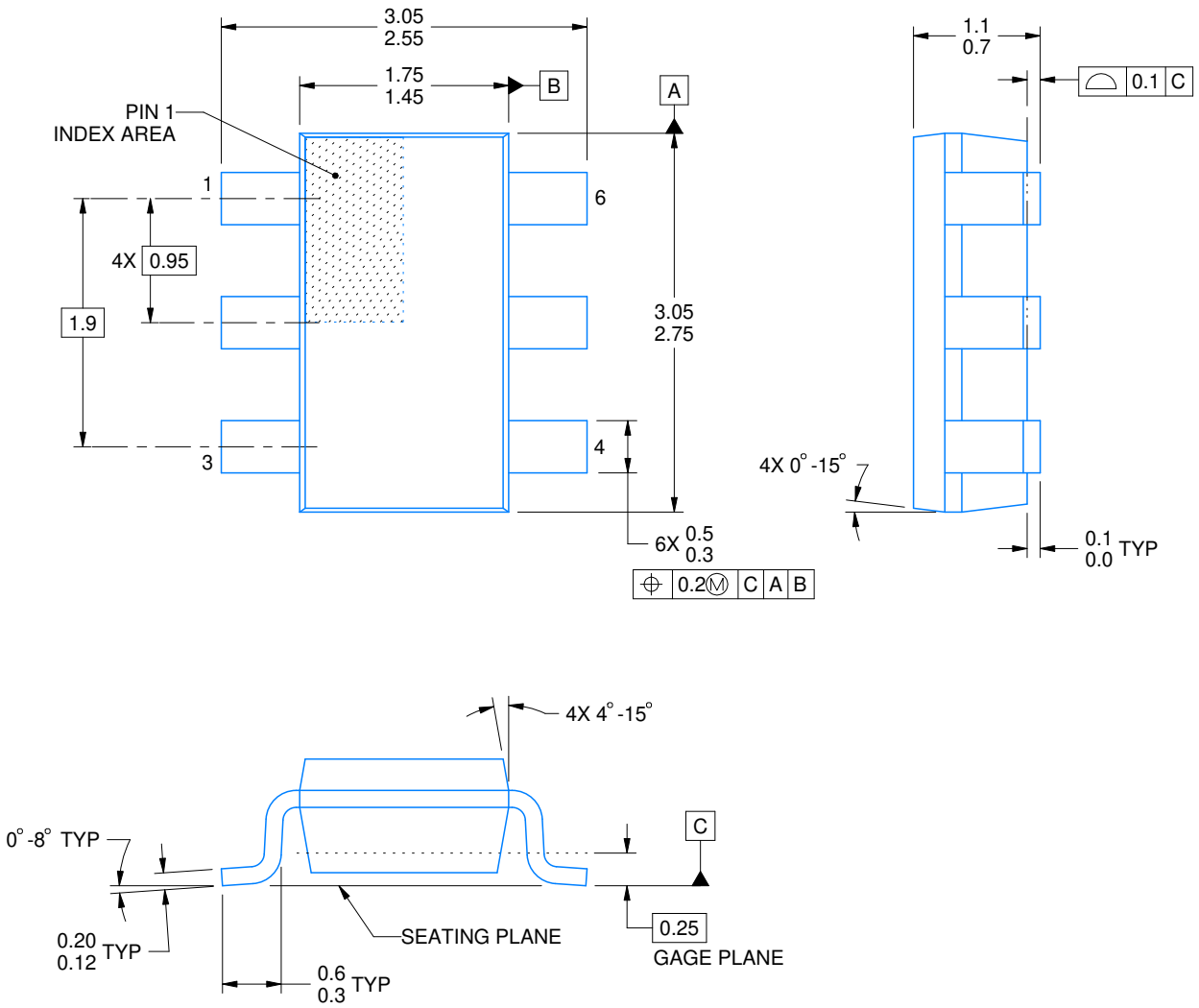

4214841/E 08/2024

NOTES:

1. All linear dimensions are in millimeters. Any dimensions in parenthesis are for reference only. Dimensioning and tolerancing per ASME Y14.5M.
2. This drawing is subject to change without notice.
3. Reference JEDEC MO-193.

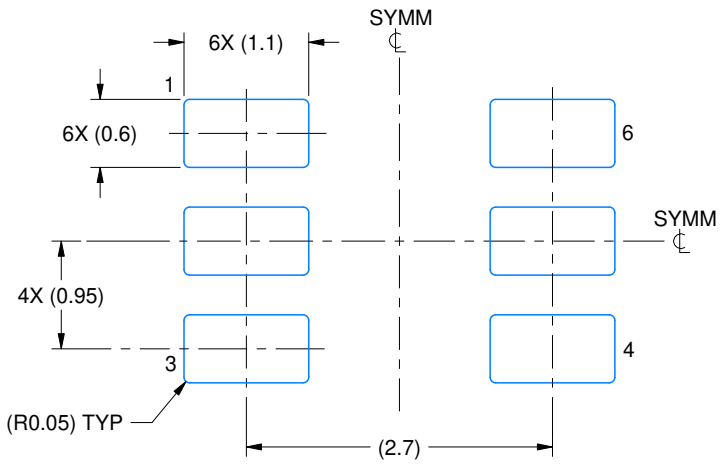

LAND PATTERN EXAMPLE
EXPLOSED METAL SHOWN
SCALE:15X

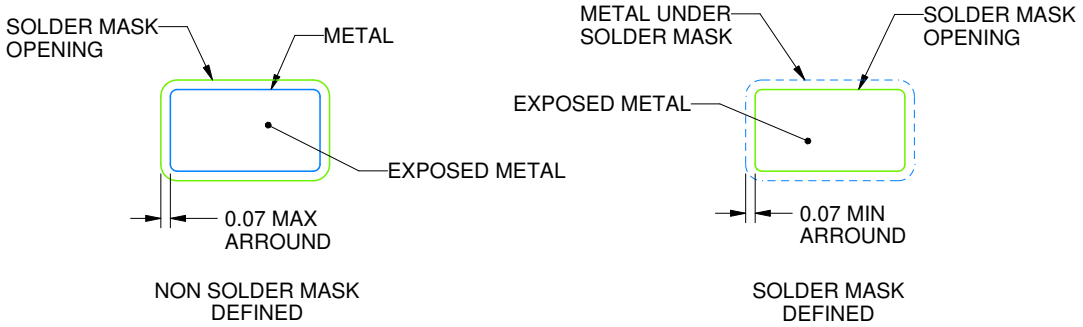

SOLDERMASK DETAILS

4214841/E 08/2024

NOTES: (continued)

4. Publication IPC-7351 may have alternate designs.
5. Solder mask tolerances between and around signal pads can vary based on board fabrication site.

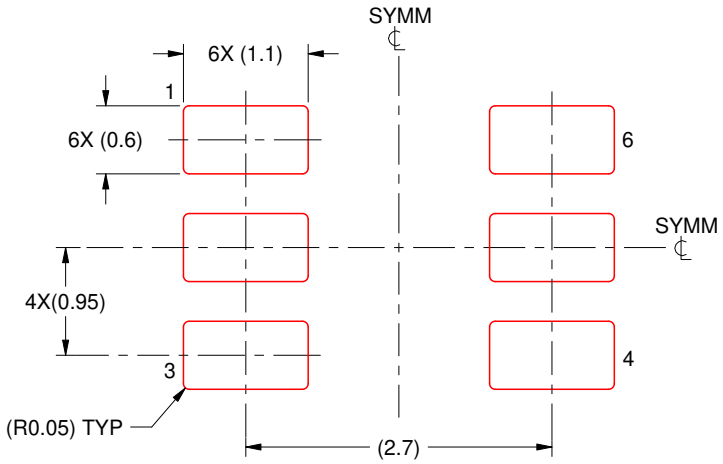

SOLDER PASTE EXAMPLE
BASED ON 0.125 THICK STENCIL
SCALE:15X

4214841/E 08/2024

NOTES: (continued)

6. Laser cutting apertures with trapezoidal walls and rounded corners may offer better paste release. IPC-7525 may have alternate design recommendations.
7. Board assembly site may have different recommendations for stencil design.

IMPORTANT NOTICE AND DISCLAIMER

TI PROVIDES TECHNICAL AND RELIABILITY DATA (INCLUDING DATASHEETS), DESIGN RESOURCES (INCLUDING REFERENCE DESIGNS), APPLICATION OR OTHER DESIGN ADVICE, WEB TOOLS, SAFETY INFORMATION, AND OTHER RESOURCES “AS IS” AND WITH ALL FAULTS, AND DISCLAIMS ALL WARRANTIES, EXPRESS AND IMPLIED, INCLUDING WITHOUT LIMITATION ANY IMPLIED WARRANTIES OF MERCHANTABILITY, FITNESS FOR A PARTICULAR PURPOSE OR NON-INFRINGEMENT OF THIRD PARTY INTELLECTUAL PROPERTY RIGHTS.

These resources are intended for skilled developers designing with TI products. You are solely responsible for (1) selecting the appropriate TI products for your application, (2) designing, validating and testing your application, and (3) ensuring your application meets applicable standards, and any other safety, security, regulatory or other requirements.

These resources are subject to change without notice. TI grants you permission to use these resources only for development of an application that uses the TI products described in the resource. Other reproduction and display of these resources is prohibited. No license is granted to any other TI intellectual property right or to any third party intellectual property right. TI disclaims responsibility for, and you fully indemnify TI and its representatives against any claims, damages, costs, losses, and liabilities arising out of your use of these resources.

TI’s products are provided subject to TI’s Terms of Sale, TI’s General Quality Guidelines, or other applicable terms available either on ti.com or provided in conjunction with such TI products. TI’s provision of these resources does not expand or otherwise alter TI’s applicable warranties or warranty disclaimers for TI products. Unless TI explicitly designates a product as custom or customer-specified, TI products are standard, catalog, general purpose devices.

TI objects to and rejects any additional or different terms you may propose.

Copyright © 2025, Texas Instruments Incorporated

Last updated 10/2025