TPS62097 2-A High Efficiency Step-Down Converter with iDCS-Control, Forced PWM Mode and Selective Switching Frequency

1 Features

- New product available: TPS62851x, 6-V, 0.5-A / 1-A / 2-A step-down converter in SOT583 package
- iDCS-control topology
- Forced PWM or power save mode
- Up to 97% efficiency
- 2.5-V to 6.0-V input voltage
- 0.8-V to V_{IN} adjustable output voltage
- 1.8-V and 3.3-V fixed output voltage
- ±1% output voltage accuracy
- Hiccup short circuit protection
- Programmable soft start-up
- Output voltage tracking
- Selectable switching frequency
- 100% duty cycle for lowest dropout
- Output discharge
- Power good output
- Thermal shutdown protection
- -40°C to 125°C operating junction temperature
- Available in 2-mm × 2-mm VQFN package

2 Applications

- Motor drives
- Programmable logic controllers (PLCs)
- Solid state drives (SSDs)
- Point of load (POL) regulators

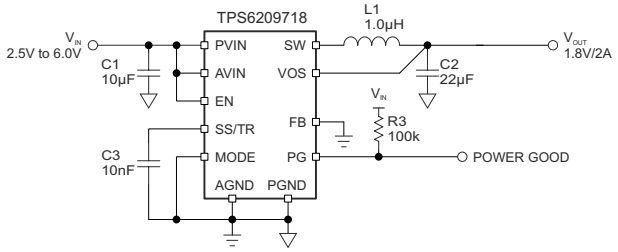

1.8-V Output, PWM/PSM Mode Application

3 Description

The TPS62097 device is a synchronous step-down converter optimized for high efficiency and noise critical applications. The devices focus on high efficiency conversion over a wide output current range. At medium to heavy loads, the converter operates in PWM mode and automatically enters Power Save Mode operation at light load. The switching frequency is selectable in the range of 1.5 MHz to 2.5 MHz by an external resistor. iDCS-Control is able to be operated in forced PWM mode for low noise operation with a fixed switching frequency.

To address the requirements of system power rails, the internal compensation circuit allows a large selection of external output capacitor values in excess of 150 µF. To control the inrush current during the start-up, the device provides a programmable soft start-up by an external capacitor connected to the SS/TR pin. The SS/TR pin is also used in voltage tracking configurations. The device integrates short circuit protection, power good and thermal shutdown features. The device is available in a 2-mm x 2-mm VQFN package.

The new product, TPS62851x, offers reduced BOM cost, smaller total solution size and other features.

Device Information

PART NUMBER	PACKAGE(1)	BODY SIZE (NOM)
TPS62097	VQFN (11)	2.0 mm x 2.0 mm
TPS6209718		
TPS6209733		

(1) For all available packages, see the orderable addendum at the end of the data sheet.

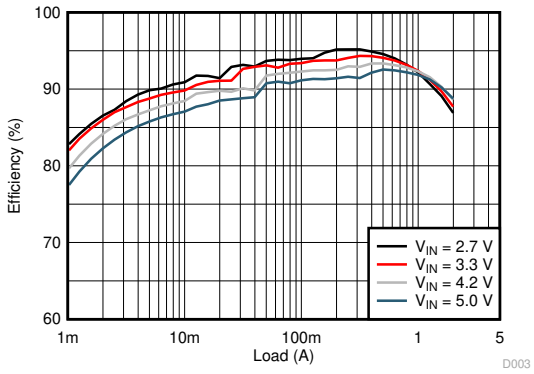

1.8-V Output, PWM/PSM Mode Efficiency

An IMPORTANT NOTICE at the end of this data sheet addresses availability, warranty, changes, use in safety-critical applications, intellectual property matters and other important disclaimers. PRODUCTION DATA.

Table of Contents

1 Features....1
2 Applications....1
3 Description....1
4 Revision History....2
5 Device Options....3
6 Pin Configuration and Functions....3
7 Specifications....4
7.1 Absolute Maximum Ratings....4
7.2 ESD Ratings....4
7.3 Recommend Operating Conditions....4
7.4 Thermal Information....4
7.5 Electrical Characteristics....5
7.6 Typical Characteristics....6
8 Detailed Description....7
8.1 Overview....7
8.2 Functional Block Diagram....7
8.3 Feature Description....8
8.4 Device Function Modes....8
9 Application and Implementation....12
9.1 Application Information....12
9.2 1.2-V Output Application....12
10 Power Supply Recommendations....20
11 Layout....21
11.1 Layout Guidelines....21
11.2 Layout Example....21
12 Device and Documentation Support....22
12.1 Device Support....22
12.2 Support Resources....22
12.3 Receiving Notification of Documentation Updates....22
12.4 Trademarks....22
12.5 Electrostatic Discharge Caution....22
12.6 Glossary....22
13 Mechanical, Packaging, and Orderable Information....22

4 Revision History

NOTE: Page numbers for previous revisions may differ from page numbers in the current version.

Changes from Revision * (December 2015) to Revision A (January 2021)	Page
• Added links to new device (TPS62851x)	1
• Added links to relevant applications pages on TI website	1
• Updated the numbering format for tables, figures and cross-references throughout the document.	1

Copyright © 2021 Texas Instruments Incorporated

5 Device Options

PART NUMBER(1)	OUTPUT VOLTAGE	PACKAGE MARKING
TPS62097	Adjustable	ZFZ5
TPS6209718	1.8V	ZGB5
TPS6209733	3.3V	ZGC5

(1) For detailed ordering information, please check the Mechanical, Packaging, and Orderable Information section at the end of this datasheet.

6 Pin Configuration and Functions

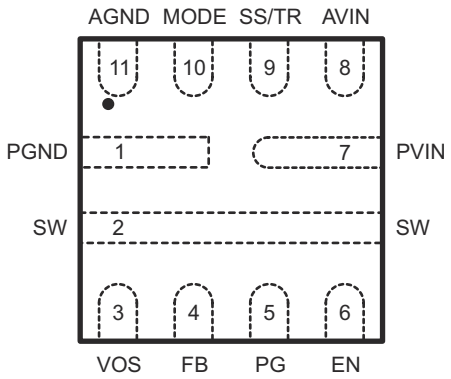

Figure 6-1. 11-Pin VQFN RWK Package (Top View)

Table 6-1. Pin Functions

PIN		I/O	DESCRIPTION
NAME	NO.		
PGND	1		Power ground pin
SW	2	PWR	Switch pin. It is connected to the internal MOSFET switches. Connect the external inductor between this terminal and the output capacitor.
VOS	3	I	Output voltage sense pin. This pin must be directly connected to the output capacitor.
FB	4	I	Feedback pin. For the fixed output voltage versions, this pin is recommended to be connected to AGND for improved thermal performance. The pin also can be left floating as an internal 400-kΩ resistor is connected between this pin and AGND for fixed output voltage versions. For the adjustable output voltage version, a resistor divider sets the output voltage.
PG	5	O	Power-good open-drain output pin. The pullup resistor should not be connected to any voltage higher than 6 V. If it is not used, leave the pin floating.
EN	6	I	Enable pin. To enable the device, this pin needs to be pulled high. Pulling this pin low disables the device. This pin has an internal pulldown resistor of typically 375 kΩ when the device is disabled.
PVIN	7	PWR	Power input supply pin
AVIN	8	I	Analog input supply pin. Connect it to the PVIN pin together.
SS/TR	9	I	Soft start-up and voltage tracking pin. A capacitor is connected to this pin to set the soft start-up time. Leaving this pin floating sets the minimum start-up time.
MODE	10	I	Mode selection pin. Connect this pin to AGND to enable Power Save Mode with automatic transition between PWM and Power Save Mode. Connect this pin to an external resistor or leave floating to enable forced PWM mode only. See Table 8-1.
AGND	11		Analog ground pin

Copyright © 2021 Texas Instruments Incorporated

7 Specifications

7.1 Absolute Maximum Ratings

over operating free-air temperature range (unless otherwise noted)[1]

		MIN	MAX	UNIT
Voltage at Pins[2]	AVIN, PVIN, EN, VOS, PG	–0.3	6.0	V
	MODE, SS/TR, SW	–0.3	V_{IN}+0.3V	
	FB	–0.3	3.0	
Sink current	PG	0	1.0	mA
Temperature	Operating Junction, T_J	-40	150	°C
	Storage, T_{stg}	–65	150	

(1) Stresses beyond those listed under absolute maximum ratings may cause permanent damage to the device. These are stress ratings only, and functional operation of the device at these or any other conditions beyond those indicated under recommended operating conditions is not implied. Exposure to absolute-maximum-rated conditions for extended periods may affect device reliability.
(2) All voltage values are with respect to network ground terminal.

7.2 ESD Ratings

			VALUE	UNIT
V_{ESD}	Electrostatic discharge	Human Body Model (HBM) ESD stress voltage[1]	±2000	V
		Charged Device Model (CDM) ESD stress voltage[2]	±500	

(1) JEDEC document JEP155 states that 500V HBM allows safe manufacturing with a standard ESD control process.
(2) JEDEC document JEP157 states that 250V CDM allows safe manufacturing with a standard ESD control process.

7.3 Recommend Operating Conditions

Over operating free-air temperature range, unless otherwise noted.

		MIN	MAX	UNIT
V_{IN}	Input voltage range	2.5	6.0	V
V_{PG}	Pull-up resistor voltage	0	6.0	V
V_{OUT}	Output voltage range	0.8	V_{IN}	V
I_{OUT}	Output current range	0	2.0	A
T_J	Operating junction temperature	-40	125	°C

7.4 Thermal Information

THERMAL METRIC[1]		TPS62097xx RWK (11 TERMINALS)	UNITS
$R_{\theta JA}$	Junction-to-ambient thermal resistance	83.4	°C/W
$R_{\theta JC(top)}$	Junction-to-case (top) thermal resistance	61.0	°C/W
$R_{\theta JB}$	Junction-to-board thermal resistance	19.9	°C/W
ψ_{JT}	Junction-to-top characterization parameter	4.4	°C/W
ψ_{JB}	Junction-to-board characterization parameter	19.9	°C/W
$R_{\theta JC(bot)}$	Junction-to-case (bottom) thermal resistance	2.0	°C/W

(1) For more information about traditional and new thermal metrics, see the IC Package Thermal Metrics application report, SPRA953

Copyright © 2021 Texas Instruments Incorporated

7.5 Electrical Characteristics

T_J = -40°C to 125°C, and V_{IN} = 2.5V to 6.0V. Typical values are at T_J = 25°C and V_{IN} = 3.6V, unless otherwise noted.

PARAMETER		TEST CONDITIONS	MIN	TYP	MAX	UNIT
SUPPLY						
I_Q	Quiescent current into AVIN, PVIN	EN = High, Device not switching, T_J = –40°C to 85°C		40	57	µA
		EN = High, Device not switching		40	65	
I_{SD}	Shutdown current into AVIN, PVIN	EN = Low, T_J = –40°C to 85°C		0.7	3	µA
		EN = Low		0.7	10	
V_{UVLO}	Under voltage lock out threshold	V_{IN} falling	2.2	2.3	2.4	V
		V_{IN} rising	2.3	2.4	2.5	
T_{JSD}	Thermal shutdown threshold	T_J rising		160		°C
	Thermal shutdown hysteresis	T_J falling		20		°C
LOGIC INTERFACE (EN, MODE)						
V_{H_EN}	High-level input voltage, EN pin		2.0	1.6		V
V_{L_EN}	Low-level input voltage, EN pin			1.3	1.0	V
$I_{EN,LKG}$	Input leakage current into EN pin	EN = High		0.01	0.9	µA
R_{PD}	Pull-down resistance at EN pin	EN = Low		375		kΩ
V_{H_MO}	High-level input voltage, MODE pin		1.2			V
V_{L_MO}	Low-level input voltage, MODE pin				0.4	V
$I_{MO,LKG}$	Input leakage current into MODE pin	MODE = High		0.01	0.16	µA
SOFT STARTUP, POWER GOOD (SS/TR, PG)						
I_{SS}	Soft startup current		5.5	7.5	9.5	µA
	Voltage tracking gain factor	V_{FB} / $V_{SS/TR}$		1		
V_{PG}	Power good threshold	V_{OUT} rising, referenced to V_{OUT} nominal	92	95	98	%
		V_{OUT} falling, referenced to V_{OUT} nominal	87	90	92	
$V_{PG,OL}$	Low-level output voltage, PG pin	I_{sink} = 1mA			0.4	V
$I_{PG,LKG}$	Input leakage current into PG pin	V_{PG} = 5.0V		0.01	1.6	µA
OUTPUT						
V_{OUT}	Output voltage accuracy TPS6209718, TPS6209733	PWM mode, No load	–1.0		1.0	%
		PSM mode(1)	–1.0		2.1	
V_{FB}	Feedback reference voltage	PWM mode	792	800	808	mV
		PSM mode(1)	792	800	817	
$I_{FB,LKG}$	Input leakage current into FB pin	V_{FB} = 0.8V		0.01	0.1	µA
R_{DIS}	Output discharge resistor	EN = Low, V_{OUT} = 1.8V		165		Ω
	Line regulation	I_{OUT} = 0.5A, V_{OUT} = 1.8V(1)		0.02		%/V
	Load regulation	PWM mode, V_{OUT} = 1.8V (1)		0.2		%/A
POWER SWITCH						
$R_{DS(on)}$	High-side FET on-resistance	I_{SW} = 500mA, V_{IN} = 5.0V		40	73	mΩ
		I_{SW} = 500mA, V_{IN} = 3.6V		50	96	
	Low-side FET on-resistance	I_{SW} = 500mA, V_{IN} = 5.0V		40	68	mΩ
		I_{SW} = 500mA, V_{IN} = 3.6V		50	85	
I_{LIMF}	High-side FET forward current limit		3.1	3.6	4.2	A
		V_{IN} = 5.0V	3.3	3.6	3.9	
I_{LIMN}	Low-side FET negative current limit	Forced PWM mode	–1.25	–1.1	-0.7	A

(1) Conditions: L = 1 µH, C_{OUT} = 22 µF, Switching Frequency = 2.0 MHz

7.6 Typical Characteristics

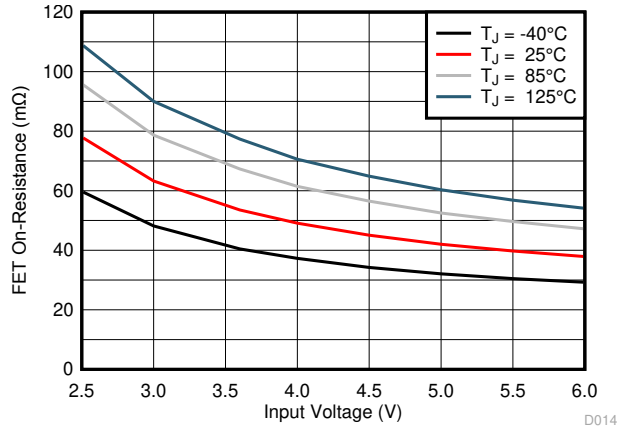

Figure 7-1. High-Side FET On-Resistance

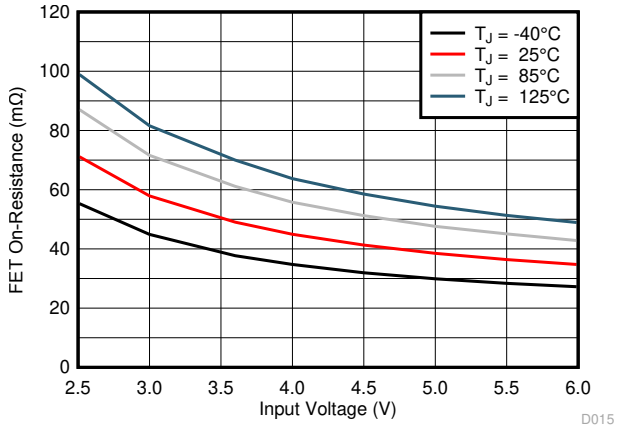

Figure 7-2. Low-Side FET On-Resistance

Copyright © 2021 Texas Instruments Incorporated

8 Detailed Description

8.1 Overview

The TPS62097 synchronous step-down converter is based on the iDCS-Control (Industrial Direct Control with Seamless transition into Power Save Mode) topology. The control topology not only keeps the advantages of DCS-Control, but also provides other features:

- Forced PWM mode over the whole load range
- Selectable PWM switching frequency
- 1% output voltage accuracy
- Output voltage sequencing and tracking

The iDCS-Control topology operates in PWM (Pulse Width Modulation) mode for medium to heavy load conditions and in Power Save Mode (PSM) at light load conditions. Or it forces the device in fixed frequency PWM mode only operation for the whole load range.

In PWM mode, the device operates with a predictive on-time switching pulse. A quasi-fixed switching frequency over the input and output voltage range is achieved by using an input and output voltage feedforward to set the on-time, as shown in Table 8-1. The converter enters Power Save Mode, reducing the switching frequency and minimizing current consumption, to achieve high efficiency over the entire load current range. Since iDCS-Control supports both operation modes within a single building block, the transition from PWM mode to Power Save Mode is seamless and without effects on the output voltage.

8.2 Functional Block Diagram

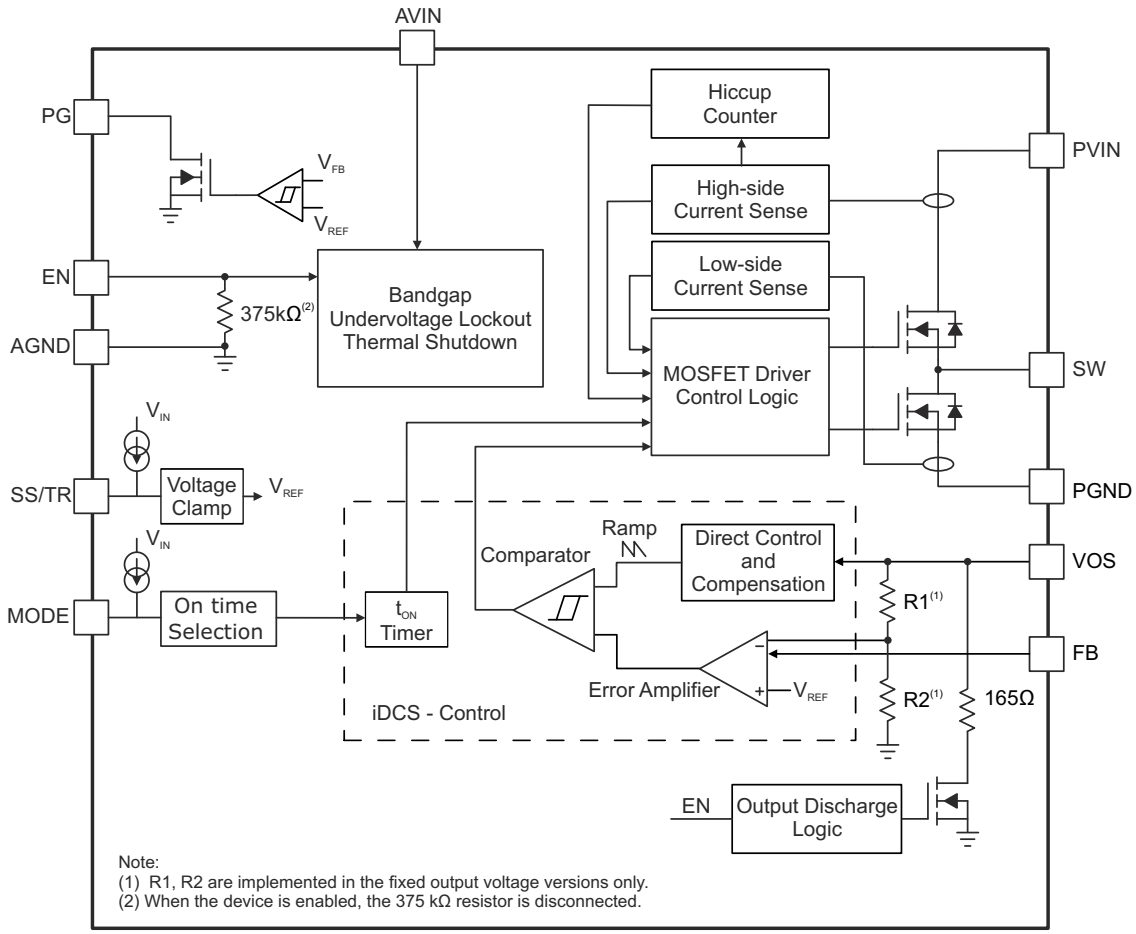

8.3 Feature Description

8.3.1 100% Duty Cycle Mode

The device offers a low input to output voltage dropout by entering 100% duty cycle mode when the input voltage reaches the level of the output voltage. In this mode, the high-side MOSFET switch is constantly turned on and the low-side MOSFET is switched off. The minimum input voltage to maintain output regulation, depending on the load current and output voltage, is calculated as:

$$V_{IN(min)} = V_{OUT(min)} + I_{OUT} \times (R_{DS(on)} + R_L) \quad (1)$$

where

- $V_{IN(min)}$ = Minimum input voltage to maintain a minimum output voltage
- I_{OUT} = Output current
- $R_{DS(on)}$ = High side FET on-resistance
- R_L = Inductor ohmic resistance (DCR)

When the device operates close to 100% duty cycle mode, the TPS62097 cannot enter Power Save Mode regardless of the load current if the input voltage decreases to typically 15% above the output voltage. The device maintains output regulation in PWM mode.

8.3.2 Switch Current Limit and Hiccup Short Circuit Protection

The switch current limit prevents the devices from high inductor current and from drawing excessive current from the battery or input voltage rail. Excessive current might occur with a shorted/saturated inductor or a heavy load/ shorted output circuit condition. If the inductor current reaches the threshold I_{LIMF}, the high-side MOSFET is turned off and the low-side MOSFET is turned on to ramp down the inductor current. Once this switch current limit is triggered 32 times, the devices stop switching and enable the output discharge. The devices then automatically start a new start-up after a typical delay time of 100 µs has passed. This is HICCUP short circuit protection and is implemented to reduce the current drawn during a short circuit condition. The devices repeat this mode until the high load condition disappears.

When the device is in forced PWM mode, the negative current limit of the low-side MOSFET is active. The negative current limit prevents excessive current from flowing back through the inductor to the input.

8.3.3 Undervoltage Lockout (UVLO)

To avoid mis-operation of the device at low input voltages, an undervoltage lockout is implemented, which shuts down the devices at voltages lower than V_{UVLO} with a hysteresis of 100 mV.

8.3.4 Thermal Shutdown

The device goes into thermal shutdown and stops switching once the junction temperature exceeds T_{JSD}. Once the device temperature falls below the threshold by 20°C, the device returns to normal operation automatically.

8.4 Device Function Modes

8.4.1 Enable and Disable (EN)

The device is enabled by setting the EN pin to a logic high. Accordingly, shutdown mode is forced if the EN pin is pulled low with a shutdown current of typically 0.7 µA.

In shutdown mode, the internal power switches as well as the entire control circuitry are turned off. An internal resistor of 165 Ω discharges the output through the VOS pin smoothly. The output discharge function also works when thermal shutdown, undervoltage lockout, or HICCUP short circuit protection are triggered.

An internal pulldown resistor of 375 kΩ is connected to the EN pin when the EN pin is low. The pulldown resistor is disconnected when the EN pin is high.

8.4.2 Power Save Mode and Forced PWM Mode (MODE)

The MODE pin is a multi-functional pin that allows the device operation in forced PWM mode or PWM/PSM mode, and to select the PWM switching frequency.

Copyright © 2021 Texas Instruments Incorporated

Once the EN pin is pulled high, the IC enables internal circuit blocks and prepares to ramp the output up. The period between the rising edge of the EN pin and the beginning of the power stage switching is called the MODE detection time, typically 50 µs. During the MODE detection time period, shown in Figure 8-1, the PWM switching frequency and operating mode are set by the MODE pin status, as shown in Table 8-1.

The PWM switching frequency cannot be changed after the detection time period. Only when the device is set in PWM/PSM mode during the MODE detection time period (MODE = AGND), it is possible to switch between PWM/PSM and forced PWM operation modes by toggling the MODE pin with a GPIO pin of a microcontroller, for example. The other four MODE pin selections force the device in PWM mode only.

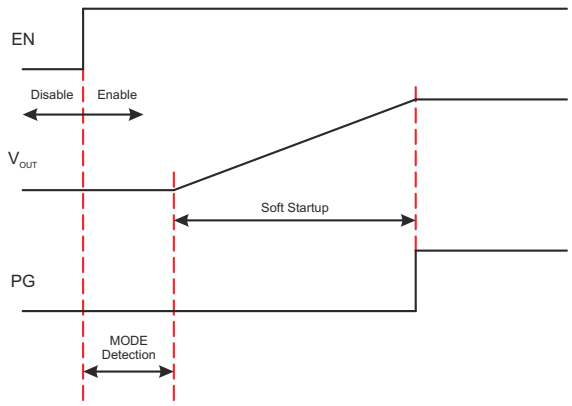

Figure 8-1. Power-up Sequence

Table 8-1. Switching Frequency and Mode Selection

TYPICAL PWM SWITCHING FREQUENCY (MHZ)	RESISTANCE AT MODE PIN (E24 EIA VALUE)	TOGGLE MODE PIN AFTER MODE DETECTION	ON-TIME EQUATION	OPERATING MODE
1.50	8.2 kΩ ±5%	No	t_{ON} = 667 ns x V_{OUT} / V_{IN}	Forced PWM
1.75	18 kΩ ±5%	No	t_{ON} = 571 ns x V_{OUT} / V_{IN}	Forced PWM
2.00	AGND	Yes	t_{ON} = 500 ns x V_{OUT} / V_{IN}	PWM/PSM and Forced PWM
2.25	39 kΩ ±5%	No	t_{ON} = 444 ns x V_{OUT} / V_{IN}	Forced PWM
2.50	75 kΩ ±5% or Open	No	t_{ON} = 400 ns x V_{OUT} / V_{IN}	Forced PWM

Connecting the MODE pin to AGND with a resistor or leaving the MODE pin open forces the device into PWM mode for the whole load range. The device operates with a fixed switching frequency that allows simple filtering of the switching frequency for noise sensitive applications. In forced PWM mode, the efficiency is lower than that of PSM at light load.

Connecting the MODE pin to the AGND pin enables Power Save Mode with an automatic transition between PWM and Power Save Mode. As the load current decreases and the inductor current becomes discontinuous, the device enters Power Save Mode operation automatically. In Power Save Mode, the switching frequency is reduced and estimated by Equation 2. In Power Save Mode, the output voltage rises slightly above the nominal output voltage, as shown in Figure 9-8. This effect is minimized by increasing the output capacitor.

$$f_{PSM} = \frac{2 \times I_{OUT}}{t_{ON}^{2} \times \frac{V_{IN}}{V_{OUT}} \times \frac{V_{IN} - V_{OUT}}{L}} \tag{2}$$

When the device operates close to 100% duty cycle mode, the TPS62097 cannot enter Power Save Mode regardless of the load current if the input voltage decreases to typically 15% above the output voltage. The device maintains output regulation in PWM mode.

Copyright © 2021 Texas Instruments Incorporated

8.4.3 Soft Start-up (SS/TR)

The TPS62097 programs its output voltage ramp rate with the SS/TR pin. Connecting an external capacitor to SS/TR enables output soft start-up to reduce inrush current from the input supply. The device charges the capacitor voltage to the input supply voltage with a constant current of typically 7.5 µA. The FB pin voltage follows the SS/TR pin voltage until the internal reference voltage of 0.8 V is reached. The soft start-up time is calculated using Equation 3. Keep the SS/TR pin floating to set the minimum start-up time.

$$t_{SS} = C_{SS/TR} \times \frac{0.8V}{7.5\mu A} \tag{3}$$

An active pulldown circuit is connected to the SS/TR pin. It discharges the external soft start-up capacitor in case of disable, UVLO, thermal shutdown, and HICCUP short circuit protection.

8.4.4 Voltage Tracking (SS/TR)

The SS/TR pin is externally driven by another voltage source to achieve output voltage tracking. The application circuit is shown in Figure 8-2. From 0 V to 0.8 V, the internal reference voltage to the internal error amplifier follows the SS/TR pin voltage. When the SS/TR pin voltage is above 0.8 V, the voltage tracking is disabled and the FB pin voltage is regulated at 0.8 V. The device achieves ratiometric or coincidental (simultaneous) output tracking, as shown in Figure 8-3.

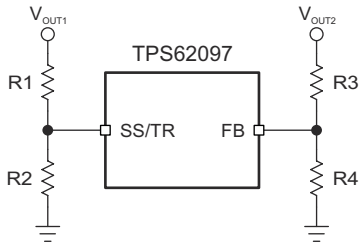

Figure 8-2. Output Voltage Tracking

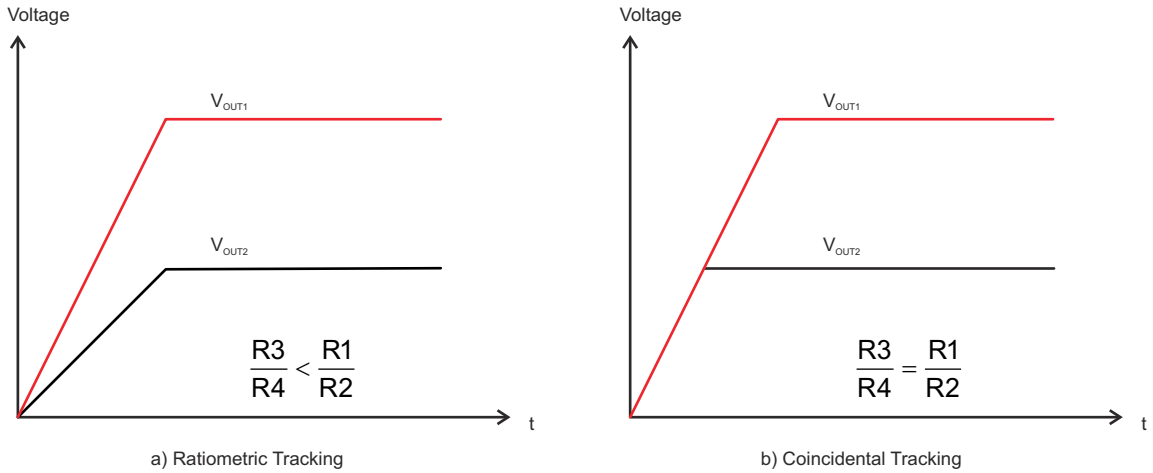

Figure 8-3. Voltage Tracking Options

The R2 value should be set properly to achieve accurate voltage tracking by taking 7.5 µA soft start-up current into account. 1 kΩ or smaller is a sufficient value for R2.

For decreasing SS/TR pin voltage, the device does not sink current from the output when the device is in PSM, so the resulting decreases of the output voltage can be slower than the SS/TR pin voltage if the load is light. When driving the SS/TR pin with an external voltage, do not exceed the voltage rating of the SS/TR pin which is V_{IN} + 0.3 V.

Copyright © 2021 Texas Instruments Incorporated

8.4.5 Power Good (PG)

The TPS62097 has a power-good output. The PG pin goes high impedance once the output voltage is above 95% of the nominal voltage and is driven low once the output voltage falls below typically 90% of the nominal voltage. The PG pin is an open-drain output and is specified to sink up to 1 mA. The power-good output requires a pullup resistor connected to any voltage rail less than 6 V. The PG pin goes low when the device is disabled or in thermal shutdown. When the devices are in UVLO, the PG pin is high impedance.

The PG signal can be used for sequencing of multiple rails by connecting it to the EN pin of other converters. Leave the PG pin floating when not used.

Copyright © 2021 Texas Instruments Incorporated

9 Application and Implementation

Note

Information in the following applications sections is not part of the TI component specification, and TI does not warrant its accuracy or completeness. TI's customers are responsible for determining suitability of components for their purposes, as well as validating and testing their design implementation to confirm system functionality.

9.1 Application Information

The following section discusses the design of the external components to complete the power supply design of the TPS62097.

9.2 1.2-V Output Application

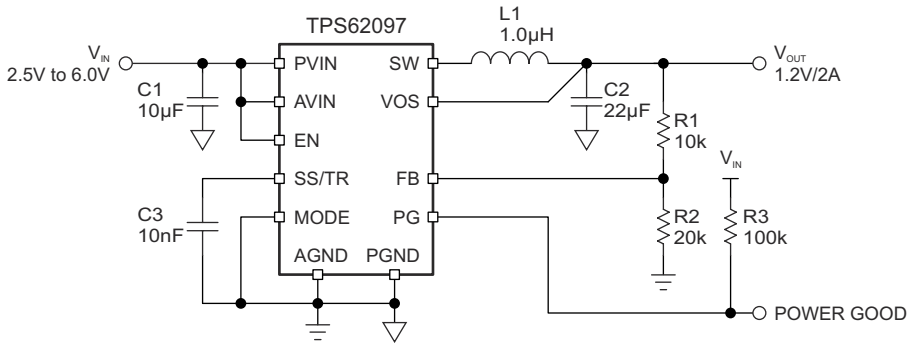

Figure 9-1. 1.2-V Output Application Schematic

9.2.1 Design Requirements

For this design example, use the following as the input parameters.

Table 9-1. Design Parameters

DESIGN PARAMETER	EXAMPLE VALUE
Input voltage range	2.5 V to 6 V
Output voltage	1.2 V
Output current	2.0 A
Output voltage ripple	< 30 mV

Table 9-2 lists the components used for the example.

Table 9-2. List of Components

REFERENCE	DESCRIPTION	MANUFACTURER
C1	10 µF, Ceramic Capacitor, 6.3 V, X7R, size 0805, C2012X7R0J106M125AB	TDK
C2	22 µF, Ceramic Capacitor, 6.3 V, X7S, size 0805, C2012X7S1A226M125AC	TDK
C3	10 nF, Ceramic Capacitor, 6.3 V, X7R, size 0603, GRM188R70J103KA01	Murata
L1	1 µH, Shielded, 5.4 A, XFL4020-102MEB	Coilcraft
R1	Depending on the output voltage, 1% accuracy	Std
R2	20 kΩ, 1% accuracy	Std
R3	100 Ωk, 1% accuracy	Std

Copyright © 2021 Texas Instruments Incorporated

9.2.2 Detailed Design Procedure

9.2.2.1 Setting the Output Voltage

The output voltage is set by an external resistor divider according to Equation 4:

$$V_{OUT} = V_{FB} \times \left(1 + \frac{R1}{R2}\right) = 0.8\ V \times \left(1 + \frac{R1}{R2}\right) \tag{4}$$

R2 should not be higher than 20 kΩ to reduce noise coupling into the FB pin and improve the output voltage regulation. Figure 9-1 shows the external resistor divider value for 1.2-V output. Choose additional resistor values for other outputs. A feedforward capacitor is not required.

The fixed output voltage versions, TPS6209718 and TPS6209733, do not need the external resistor divider. TI recommends to connect the FB pin to AGND for improved thermal performance.

9.2.2.2 Output Filter Design

The inductor and the output capacitor together provide a low-pass filter. To simplify the selection process, Table 9-3 outlines possible inductor and capacitor value combinations for most applications.

Table 9-3. Output Capacitor / Inductor Combinations

NOMINAL L [µH](2)	NOMINAL C_{OUT} [µF](3)				
	10	22	47	100	150
0.47					
1		+(1)	+	+	+
2.2					

(1) Typical application configuration. Other '+' mark indicates recommended filter combinations. Other values may be acceptable in applications but should be fully tested by the user. Refer to the application note SLVA710.
(2) Inductor tolerance and current de-rating is anticipated. The effective inductance can vary by +20% and -30%. The required effective inductance is 500-nH minimum.
(3) Capacitance tolerance and bias voltage de-rating is anticipated. The effective capacitance can vary by 20% and -50%.

9.2.2.3 Inductor Selection

The main parameters for the inductor selection are the inductor value and the saturation current. To calculate the maximum inductor current under static load conditions, Equation 5 is given.

$$I_{L,MAX} = I_{OUT,MAX} + \frac{\Delta I_L}{2}$$

$$\Delta I_L = V_{OUT} \times \frac{1 - \frac{V_{OUT}}{V_{IN}}}{L \times f_{SW}} \tag{5}$$

Where:

$I_{OUT,MAX}$ = Maximum output current
ΔI_L = Inductor current ripple
f_{SW} = Switching frequency
L = Inductor value

TI recommends to choose the saturation current for the inductor 20% to 30% higher than the $I_{L,MAX}$, out of Equation 5. A higher inductor value is also useful to lower ripple current but increases the transient response time as well. The following inductors are recommended to be used in designs.

Table 9-4. List of Recommended Inductors

INDUCTANCE [µH]	CURRENT RATING [A]	DIMENSIONS L x W x H [mm^3]	DC RESISTANCE [mΩ TYP]	PART NUMBER(1)
1	5.4	4.0x4.0x2.0	11	COILCRAFT XFL4020-102ME
1	5.3	2.5x2.0x1.2	33	TOKO DFE252012F-1R0M
1	3.4	2.0x1.2x1.0	62	TOKO DFE201210S-1R0M
1	5.1	3.0x3.0x1.2	43	TAIYO YUDEN MDMK3030T1R0MM
1	4.2	2.5x2.0x1.2	43	CYNTEC SDEM25201B-1R0MS-79
1	2.6	2.5x2.0x1.2	48	Murata LQH2HPN1R0NJR
1	6.6	3.0x3.0x1.2	42	Wurth Electronics 74438334010

(1) See *Third-Party Products Disclaimer*

9.2.2.4 Capacitor Selection

The input capacitor is the low impedance energy source for the converters which helps to provide stable operation. A low-ESR multilayer ceramic capacitor is required for best filtering and should be placed between PVIN and PGND as close as possible to those pins. For most applications, a 10-µF capacitor is sufficient, though a larger value reduces input current ripple.

The architecture of the TPS62097 allows the use of tiny ceramic output capacitors with low equivalent series resistance (ESR). These capacitors provide low output voltage ripple and are recommended. To keep its low resistance up to high frequencies and to get narrow capacitance variation with temperature, TI recommends to use X7R or X5R dielectrics. The recommended typical output capacitor value is 22 µF and can vary over a wide range as outlined in Table 9-4.

Ceramic capacitors have a DC-Bias effect, which has a strong influence on the final effective capacitance. Choose the right capacitor carefully in combination with considering its package size and voltage rating. Ensure that the input effective capacitance is at least 5 µF and the output effective capacitance is at least 10 µF.

Copyright © 2021 Texas Instruments Incorporated

9.2.3 Application Performance Curves

T_A = 25°C, V_{IN} = 3.6 V, unless otherwise noted.

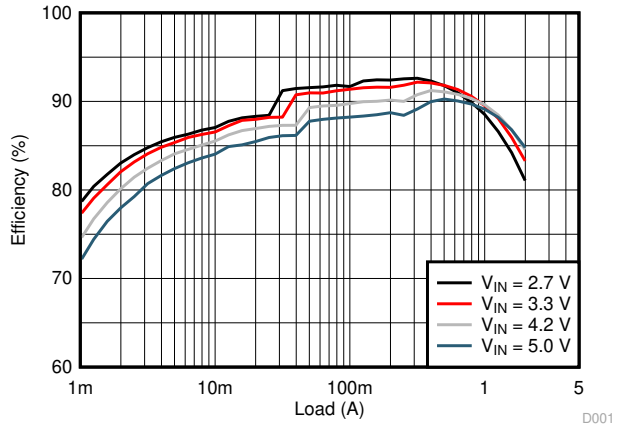

V_{OUT} = 1.2 V

Figure 9-2. Efficiency, PWM/PSM Mode (2.0 MHz)

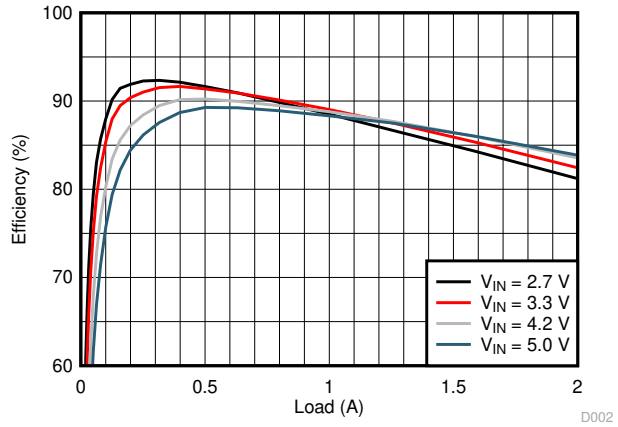

V_{OUT} = 1.2 V

Figure 9-3. Efficiency, Forced PWM Mode (2.0 MHz)

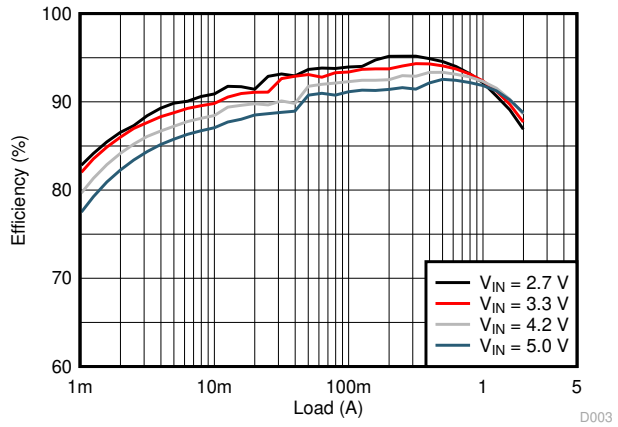

V_{OUT} = 1.8 V

Figure 9-4. Efficiency, PWM/PSM Mode (2.0 MHz)

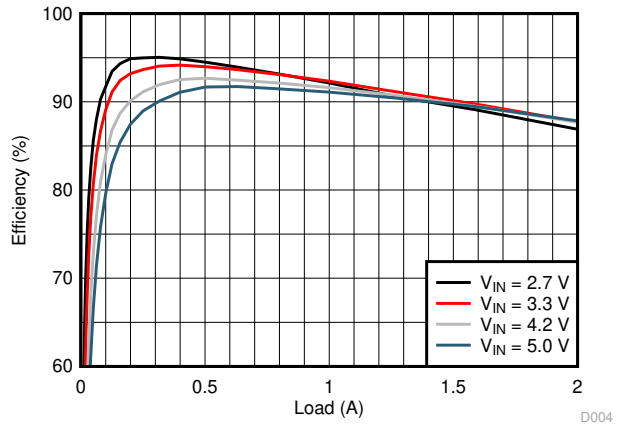

V_{OUT} = 1.8 V

Figure 9-5. Efficiency, Forced PWM Mode (2.0 MHz)

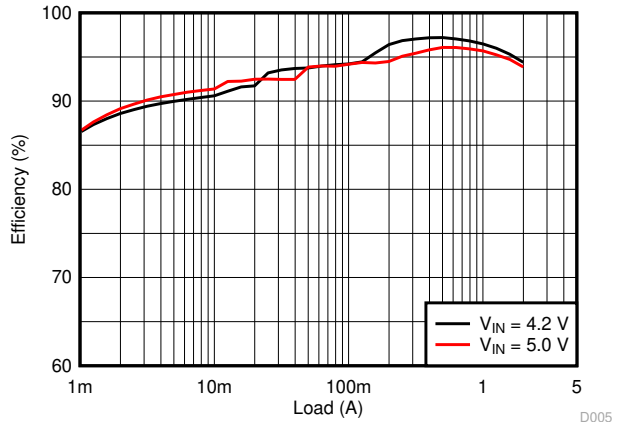

V_{OUT} = 3.3 V

Figure 9-6. Efficiency, PWM/PSM Mode (2.0 MHz)

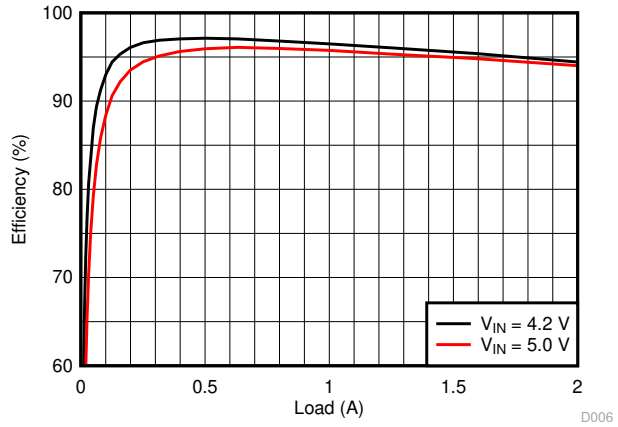

V_{OUT} = 3.3 V

Figure 9-7. Efficiency, Forced PWM Mode (2.0 MHz)

Copyright © 2021 Texas Instruments Incorporated

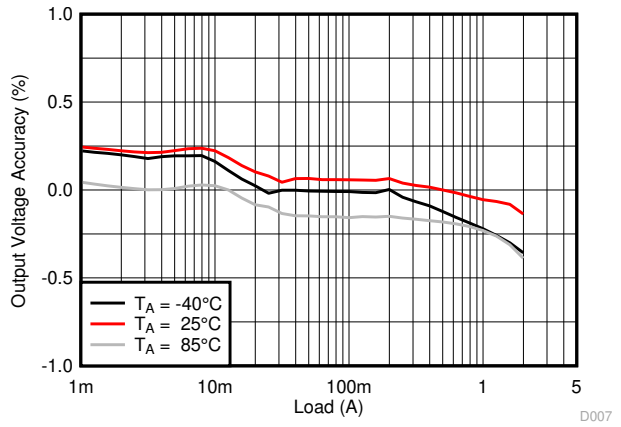

V_{OUT} = 1.2 V

Figure 9-8. Load Regulation, PWM/PSM Mode (2.0 MHz)

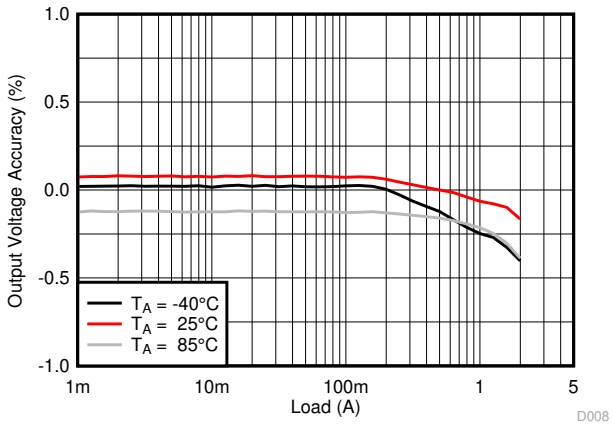

V_{OUT} = 1.2 V

Figure 9-9. Load Regulation, Forced PWM Mode (2.0 MHz)

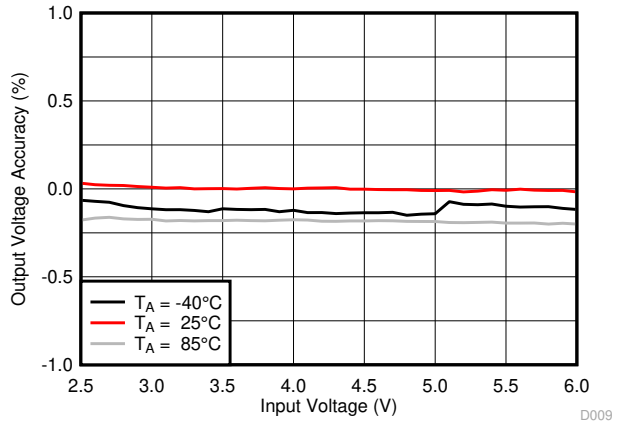

V_{OUT} = 1.2 V I_{OUT} = 500 mA

Figure 9-10. Line Regulation, Forced PWM Mode (2.0 MHz)

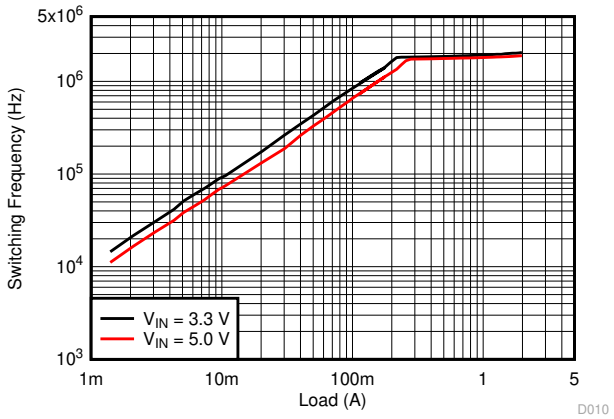

V_{OUT} = 1.2 V MODE = AGND

Figure 9-11. Switching Frequency, PWM/PSM Mode (2.0 MHz)

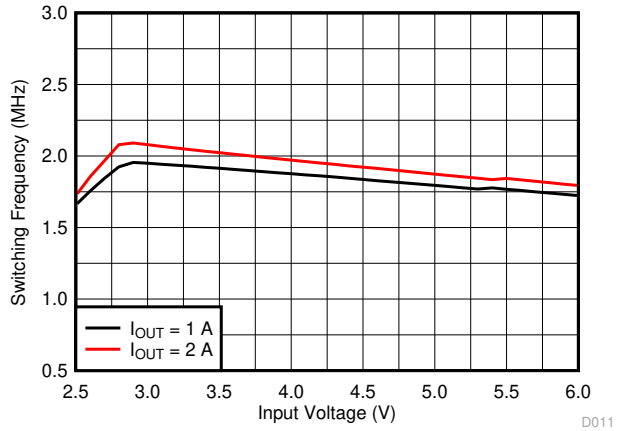

V_{OUT} = 1.2 V MODE = High after PWM/PSM Selection

Figure 9-12. Switching Frequency, Forced PWM Mode (2.0 MHz)

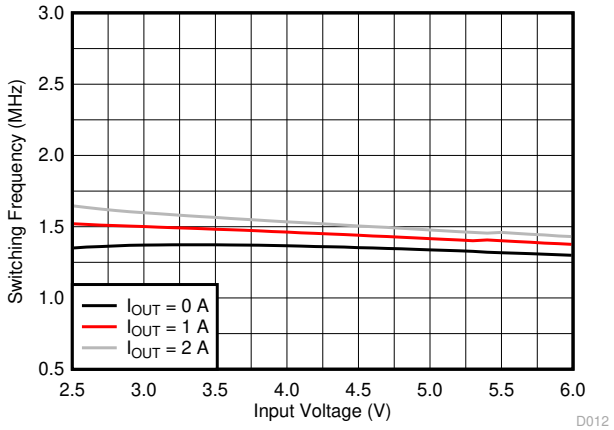

V_{OUT} = 1.2 V R_{Mode} = 8.2 kΩ

Figure 9-13. Switching Frequency, Forced PWM Mode (1.5 MHz)

Copyright © 2021 Texas Instruments Incorporated

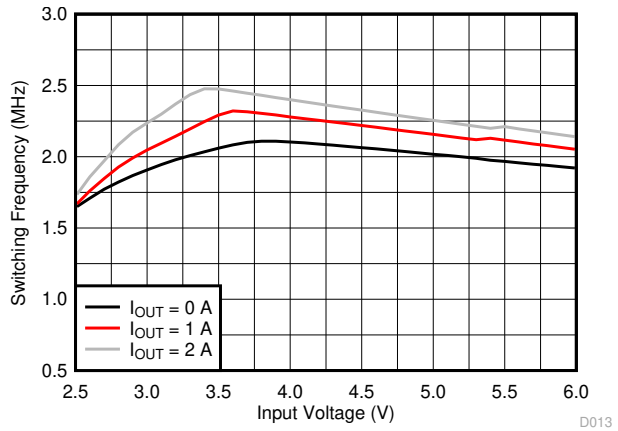

V_{OUT} = 1.2 V MODE = Open

Figure 9-14. Switching Frequency, Forced PWM Mode (2.5 MHz)

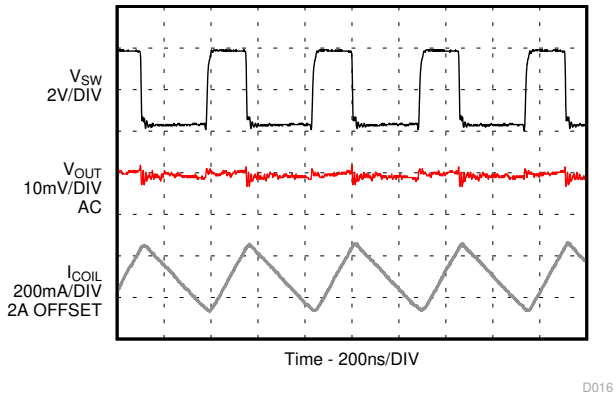

V_{OUT} = 1.2 V I_{OUT} = 2 A

Figure 9-15. Output Ripple, PWM Operation (2.0 MHz)

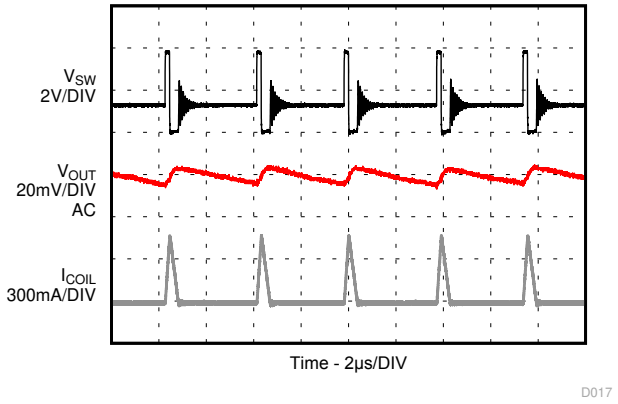

V_{OUT} = 1.2 V I_{OUT} = 30 mA

Figure 9-16. Output Ripple, Power Save Operation

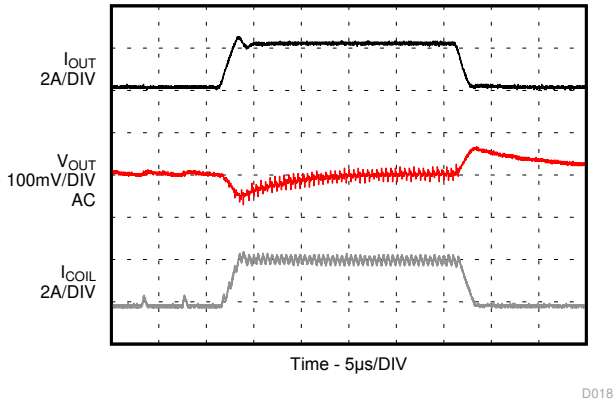

V_{OUT} = 1.2 V I_{OUT} = 0 A to 2 A, 1 A / µs

Figure 9-17. Load Transient, PWM/PSM Mode (2.0 MHz)

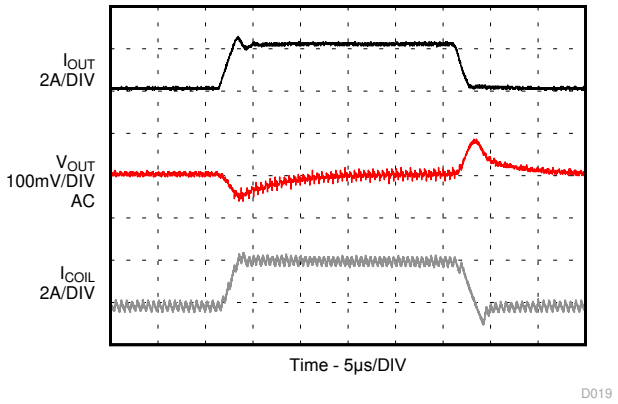

V_{OUT} = 1.2 V I_{OUT} = 0 A to 2 A, 1 A / µs

Figure 9-18. Load Transient, Forced PWM Mode (2.0 MHz)

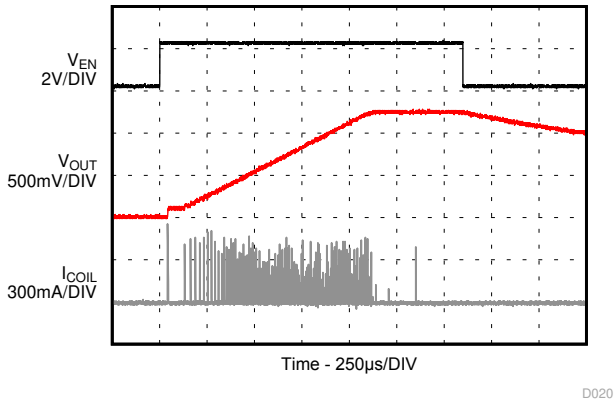

V_{OUT} = 1.2 V R_{OUT} = No Load

Figure 9-19. Startup and Shutdown without Load

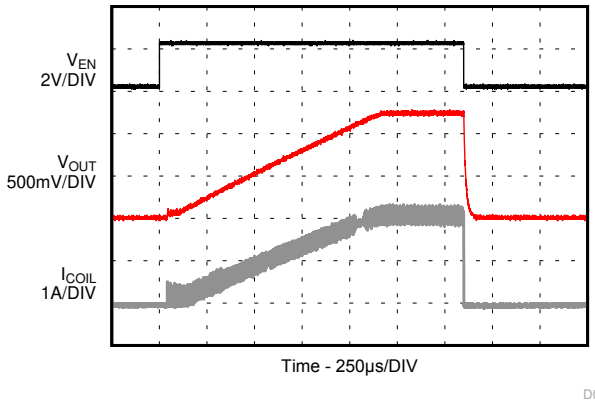

V_{OUT} = 1.2 V R_{OUT} = 0.6 Ω (2 A)

Figure 9-20. Startup and Shutdown with Load

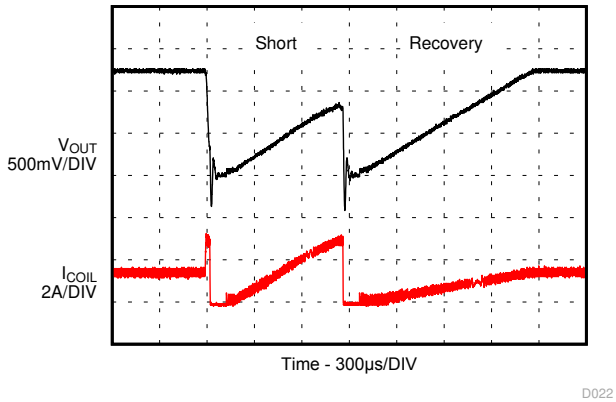

V_{OUT} = 1.2 V R_{OUT} = 0.8 Ω (1.5 A) with 1-ms short

Figure 9-21. Short Circuit Protection, HICCUP

9.2.4 Coincidental Voltage Tracking

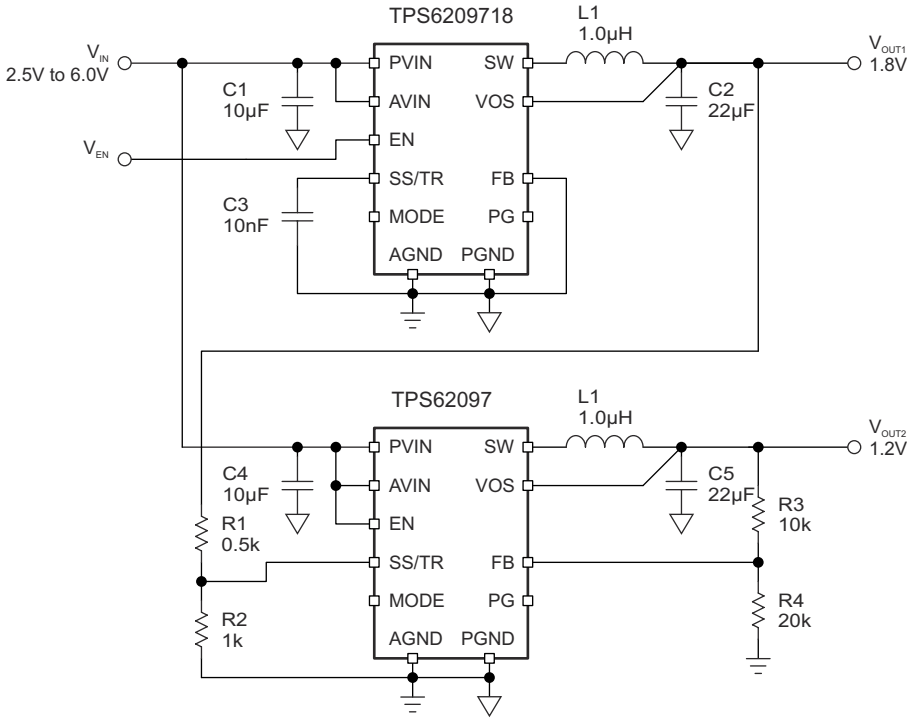

Figure 9-22. 1.8-V and 1.2-V Coincidental Voltage Tracking Schematic

9.2.4.1 Design Requirements

For this design example, use the following as the input parameters.

Table 9-5. Design Parameters

DESIGN PARAMETER	EXAMPLE VALUE
Input voltage range	2.5 V to 6 V
Output voltage 1	1.8 V
Output voltage 2	1.2 V
Output voltage 2 follows output voltage 1 coincidentally.	

Copyright © 2021 Texas Instruments Incorporated

9.2.4.2 Detailed Design Procedure

Set 1 kΩ for R2 and 0.5 kΩ for R1. Connect the two converters as shown in Figure 9-22. Set up two converters in forced PWM mode.

9.2.4.3 Application Performance Curve

T_A = 25°C, V_{IN} = 5.0 V, unless otherwise noted.

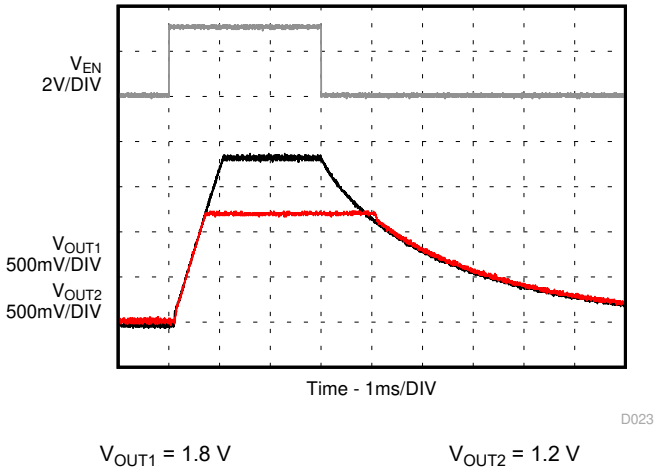

Figure 9-23. Coincidental Tracking Waveform

9.2.5 Switching Frequency Selection

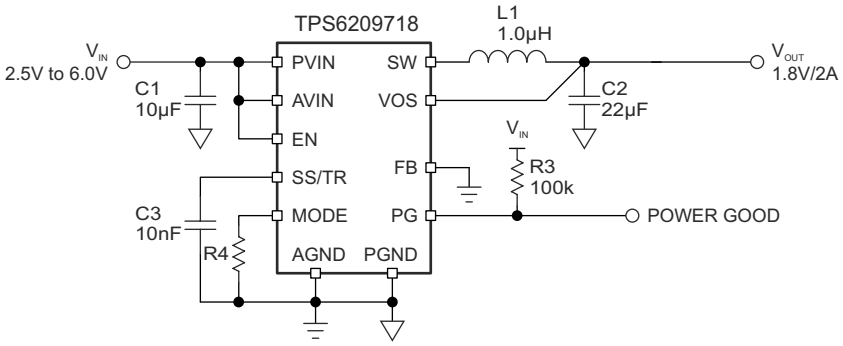

Figure 9-24. Switching Frequency Selection by an External Resistor

9.2.5.1 Design Requirements

For this design example, use the following as the input parameters.

Table 9-6. Design Parameters

DESIGN PARAMETER	EXAMPLE VALUE
Input voltage range	2.5 V to 6 V
Output voltage 1	1.8 V
Switching Frequency Selection	1.5 MHz, 2.0 MHz, or 2.5 MHz

9.2.5.2 Detailed Design Procedure

Set 8.2 kΩ and 75 kΩ for 1.5-MHz, 2.0-MHz, and 2.5-MHz switching frequency. R4 uses the standard E24 series resistor values.

9.2.5.3 Application Performance Curves

T_A = 25°C, V_{IN} = 5.0, unless otherwise noted.

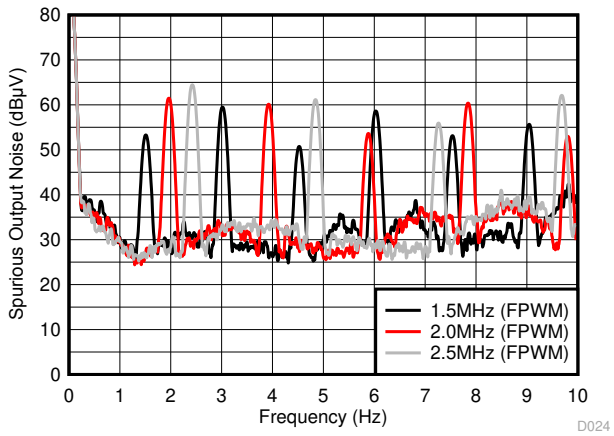

V_{OUT} = 1.8 V I_{OUT} = 1 A

Figure 9-25. Spurious Output Noise with Different Switching Frequency

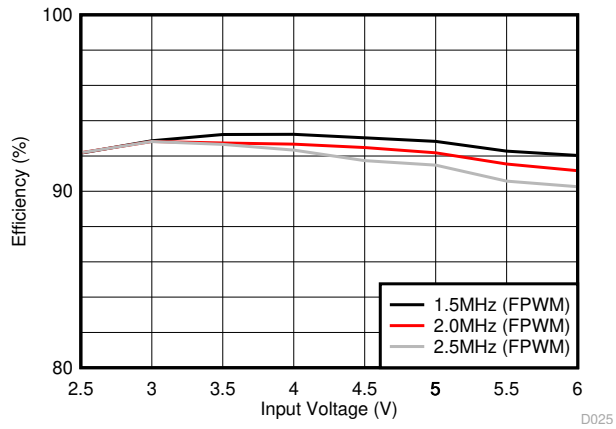

V_{OUT} = 1.8 V I_{OUT} = 1 A

Figure 9-26. Efficiency with Different Switching Frequency

10 Power Supply Recommendations

The devices are designed to operate from an input voltage supply range between 2.5 V and 6 V. The average input current of the TPS62097 is calculated as:

$$I_{IN} = \frac{1}{\eta} \times \frac{V_{OUT} \times I_{OUT}}{V_{IN}} \quad (6)$$

Ensure that a power supply has a sufficient current rating for the application.

Copyright © 2021 Texas Instruments Incorporated

11 Layout

11.1 Layout Guidelines

- TI recommends to place all components as close as possible to the IC. Specifically, the input capacitor placement must be closest to the PVIN and PGND pins of the device.
- The low side of the input and output capacitors must be connected directly to the PGND pin to avoid a ground potential shift.
- Use the terminal of the input capacitor as the common node for AVIN and PVIN, AGND, and PGND. It helps reduce the noise coupling into the internal analog circuit blocks. Do not use a solid plane pour to connect these nodes.
- Use wide and short traces for the main current paths to reduce the parasitic inductance and resistance.
- The sense trace connected to VOS pin is a signal trace. Special care should be taken to avoid noise being induced. By a direct routing, parasitic inductance can be kept small. Keep the trace away from SW nodes.
- Refer to the Figure 11-1 for an example of component placement, routing, and thermal design.

11.2 Layout Example

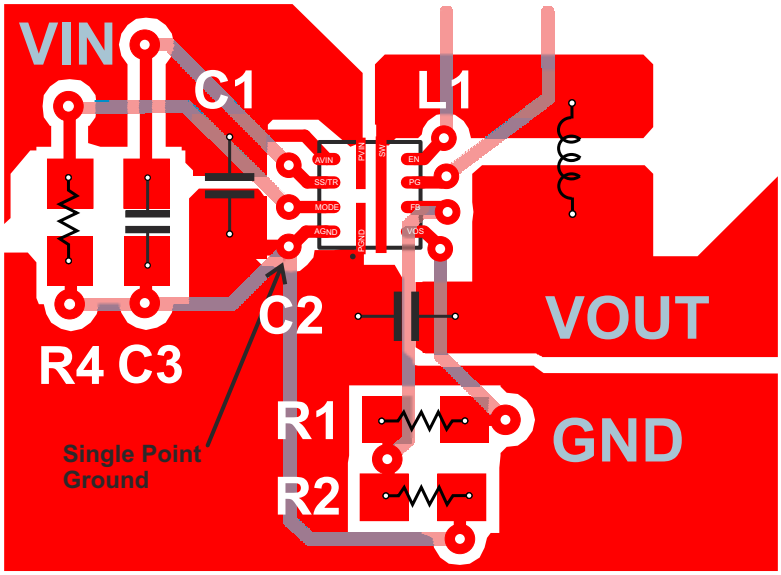

Figure 11-1. TPS62097 PCB Layout

11.2.1 Thermal Information

Implementation of integrated circuits in low-profile and fine pitch surface mount packages typically requires special attention to power dissipation. Many system dependent issues such as thermal coupling, airflow, added heat sinks and convection surfaces, and the presence of other heat-generating components affect the power-dissipation limits of a given component.

Section 7.4 provides the thermal metric of the device on the TPS62097 EVM after considering the PCB design of real applications. The big copper planes connecting to the pads of the IC on the PCB board improve the thermal performance of the device. For more details on how to use the thermal parameters, see the application notes: Thermal Characteristics Application Notes SZZA017 and SPRA953.

12 Device and Documentation Support

12.1 Device Support

12.1.1 Third-Party Products Disclaimer

TI'S PUBLICATION OF INFORMATION REGARDING THIRD-PARTY PRODUCTS OR SERVICES DOES NOT CONSTITUTE AN ENDORSEMENT REGARDING THE SUITABILITY OF SUCH PRODUCTS OR SERVICES OR A WARRANTY, REPRESENTATION OR ENDORSEMENT OF SUCH PRODUCTS OR SERVICES, EITHER ALONE OR IN COMBINATION WITH ANY TI PRODUCT OR SERVICE.

12.2 Support Resources

TI E2E™ support forums are an engineer's go-to source for fast, verified answers and design help — straight from the experts. Search existing answers or ask your own question to get the quick design help you need.

Linked content is provided "AS IS" by the respective contributors. They do not constitute TI specifications and do not necessarily reflect TI's views; see TI's Terms of Use.

12.3 Receiving Notification of Documentation Updates

To receive notification of documentation updates, navigate to the device product folder on ti.com. Click on *Subscribe to updates* to register and receive a weekly digest of any product information that has changed. For change details, review the revision history included in any revised document.

12.4 Trademarks

TI E2E™ is a trademark of Texas Instruments.
All trademarks are the property of their respective owners.

12.5 Electrostatic Discharge Caution

This integrated circuit can be damaged by ESD. Texas Instruments recommends that all integrated circuits be handled with appropriate precautions. Failure to observe proper handling and installation procedures can cause damage.

ESD damage can range from subtle performance degradation to complete device failure. Precision integrated circuits may be more susceptible to damage because very small parametric changes could cause the device not to meet its published specifications.

12.6 Glossary

TI Glossary This glossary lists and explains terms, acronyms, and definitions.

13 Mechanical, Packaging, and Orderable Information

The following pages include mechanical, packaging, and orderable information. This information is the most current data available for the designated devices. This data is subject to change without notice and revision of this document. For browser-based versions of this data sheet, refer to the left-hand navigation.

Copyright © 2021 Texas Instruments Incorporated

PACKAGING INFORMATION

Orderable part number	Status (1)	Material type (2)	Package | Pins	Package qty | Carrier	RoHS (3)	Lead finish/ Ball material (4)	MSL rating/ Peak reflow (5)	Op temp (°C)	Part marking (6)
TPS6209718RWKR	Active	Production	VQFN-HR (RWK) | 11	3000 | LARGE T&R	Yes	Call TI | Sn	Level-1-260C-UNLIM	-40 to 125	ZGB5
TPS6209718RWKR.A	Active	Production	VQFN-HR (RWK) | 11	3000 | LARGE T&R	Yes	SN	Level-1-260C-UNLIM	-40 to 125	ZGB5
TPS6209718RWKR.B	Active	Production	VQFN-HR (RWK) | 11	3000 | LARGE T&R	Yes	SN	Level-1-260C-UNLIM	-40 to 125	ZGB5
TPS6209718RWKT	Active	Production	VQFN-HR (RWK) | 11	250 | SMALL T&R	Yes	Call TI | Sn	Level-1-260C-UNLIM	-40 to 125	ZGB5
TPS6209718RWKT.A	Active	Production	VQFN-HR (RWK) | 11	250 | SMALL T&R	Yes	SN	Level-1-260C-UNLIM	-40 to 125	ZGB5
TPS6209718RWKT.B	Active	Production	VQFN-HR (RWK) | 11	250 | SMALL T&R	Yes	SN	Level-1-260C-UNLIM	-40 to 125	ZGB5
TPS6209733RWKR	Active	Production	VQFN-HR (RWK) | 11	3000 | LARGE T&R	Yes	Call TI	Level-1-260C-UNLIM	-40 to 125	ZGC5
TPS6209733RWKR.A	Active	Production	VQFN-HR (RWK) | 11	3000 | LARGE T&R	Yes	Call TI	Level-1-260C-UNLIM	-40 to 125	ZGC5
TPS6209733RWKR.B	Active	Production	VQFN-HR (RWK) | 11	3000 | LARGE T&R	Yes	Call TI	Level-1-260C-UNLIM	-40 to 125	ZGC5
TPS6209733RWKT	Active	Production	VQFN-HR (RWK) | 11	250 | SMALL T&R	Yes	Call TI	Level-1-260C-UNLIM	-40 to 125	ZGC5
TPS6209733RWKT.A	Active	Production	VQFN-HR (RWK) | 11	250 | SMALL T&R	Yes	Call TI	Level-1-260C-UNLIM	-40 to 125	ZGC5
TPS6209733RWKT.B	Active	Production	VQFN-HR (RWK) | 11	250 | SMALL T&R	Yes	Call TI	Level-1-260C-UNLIM	-40 to 125	ZGC5
TPS62097RWKR	Active	Production	VQFN-HR (RWK) | 11	3000 | LARGE T&R	Yes	Call TI | Sn	Level-1-260C-UNLIM	-40 to 125	ZFZ5
TPS62097RWKR.A	Active	Production	VQFN-HR (RWK) | 11	3000 | LARGE T&R	Yes	SN	Level-1-260C-UNLIM	-40 to 125	ZFZ5
TPS62097RWKR.B	Active	Production	VQFN-HR (RWK) | 11	3000 | LARGE T&R	Yes	SN	Level-1-260C-UNLIM	-40 to 125	ZFZ5
TPS62097RWKT	Active	Production	VQFN-HR (RWK) | 11	250 | SMALL T&R	Yes	Call TI | Sn	Level-1-260C-UNLIM	-40 to 125	ZFZ5
TPS62097RWKT.A	Active	Production	VQFN-HR (RWK) | 11	250 | SMALL T&R	Yes	SN	Level-1-260C-UNLIM	-40 to 125	ZFZ5
TPS62097RWKT.B	Active	Production	VQFN-HR (RWK) | 11	250 | SMALL T&R	Yes	SN	Level-1-260C-UNLIM	-40 to 125	ZFZ5

(1) **Status:** For more details on status, see our product life cycle.

(2) **Material type:** When designated, preproduction parts are prototypes/experimental devices, and are not yet approved or released for full production. Testing and final process, including without limitation quality assurance, reliability performance testing, and/or process qualification, may not yet be complete, and this item is subject to further changes or possible discontinuation. If available for ordering, purchases will be subject to an additional waiver at checkout, and are intended for early internal evaluation purposes only. These items are sold without warranties of any kind.

(3) **RoHS values:** Yes, No, RoHS Exempt. See the TI RoHS Statement for additional information and value definition.

(4) **Lead finish/Ball material:** Parts may have multiple material finish options. Finish options are separated by a vertical ruled line. Lead finish/Ball material values may wrap to two lines if the finish value exceeds the maximum column width.

(5) **MSL rating/Peak reflow:** The moisture sensitivity level ratings and peak solder (reflow) temperatures. In the event that a part has multiple moisture sensitivity ratings, only the lowest level per JEDEC standards is shown. Refer to the shipping label for the actual reflow temperature that will be used to mount the part to the printed circuit board.

(6) **Part marking:** There may be an additional marking, which relates to the logo, the lot trace code information, or the environmental category of the part.

Multiple part markings will be inside parentheses. Only one part marking contained in parentheses and separated by a "~" will appear on a part. If a line is indented then it is a continuation of the previous line and the two combined represent the entire part marking for that device.

Important Information and Disclaimer: The information provided on this page represents TI's knowledge and belief as of the date that it is provided. TI bases its knowledge and belief on information provided by third parties, and makes no representation or warranty as to the accuracy of such information. Efforts are underway to better integrate information from third parties. TI has taken and continues to take reasonable steps to provide representative and accurate information but may not have conducted destructive testing or chemical analysis on incoming materials and chemicals. TI and TI suppliers consider certain information to be proprietary, and thus CAS numbers and other limited information may not be available for release.

In no event shall TI's liability arising out of such information exceed the total purchase price of the TI part(s) at issue in this document sold by TI to Customer on an annual basis.

OTHER QUALIFIED VERSIONS OF TPS62097 :

- Automotive : TPS62097-Q1

NOTE: Qualified Version Definitions:

- Automotive - Q100 devices qualified for high-reliability automotive applications targeting zero defects

TAPE AND REEL INFORMATION

REEL DIMENSIONS

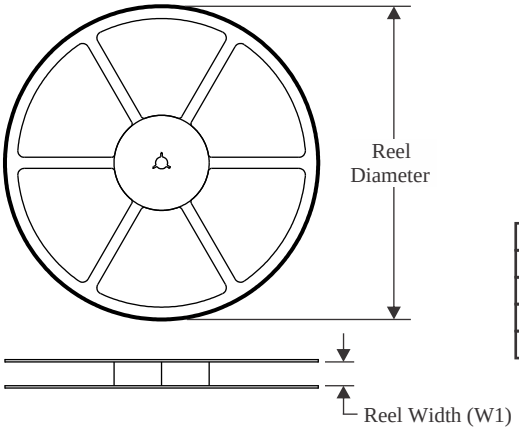

TAPE DIMENSIONS

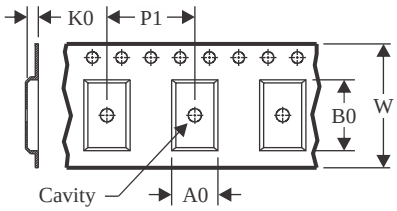

A0	Dimension designed to accommodate the component width
B0	Dimension designed to accommodate the component length
K0	Dimension designed to accommodate the component thickness
W	Overall width of the carrier tape
P1	Pitch between successive cavity centers

QUADRANT ASSIGNMENTS FOR PIN 1 ORIENTATION IN TAPE

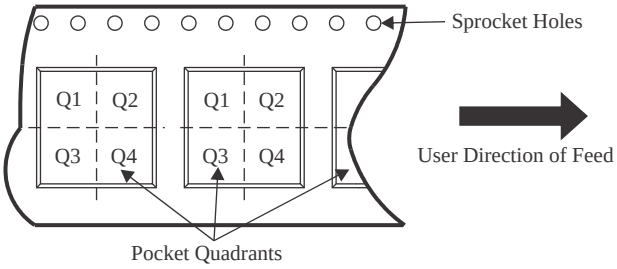

*All dimensions are nominal

Device	Package Type	Package Drawing	Pins	SPQ	Reel Diameter (mm)	Reel Width W1 (mm)	A0 (mm)	B0 (mm)	K0 (mm)	P1 (mm)	W (mm)	Pin1 Quadrant
TPS6209718RWKR	VQFN-HR	RWK	11	3000	180.0	8.4	2.3	2.3	1.15	4.0	8.0	Q2
TPS6209718RWKT	VQFN-HR	RWK	11	250	180.0	8.4	2.3	2.3	1.15	4.0	8.0	Q2
TPS6209733RWKR	VQFN-HR	RWK	11	3000	180.0	8.4	2.3	2.3	1.15	4.0	8.0	Q2
TPS6209733RWKT	VQFN-HR	RWK	11	250	180.0	8.4	2.3	2.3	1.15	4.0	8.0	Q2

TAPE AND REEL BOX DIMENSIONS

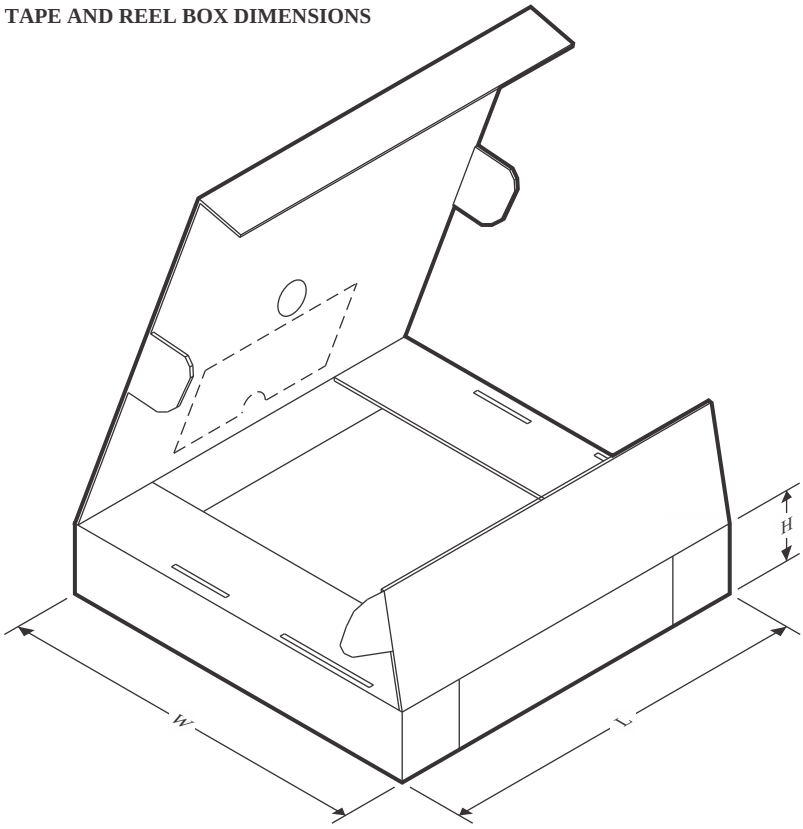

*All dimensions are nominal

Device	Package Type	Package Drawing	Pins	SPQ	Length (mm)	Width (mm)	Height (mm)
TPS6209718RWKR	VQFN-HR	RWK	11	3000	341.0	182.0	80.0
TPS6209718RWKT	VQFN-HR	RWK	11	250	341.0	182.0	80.0
TPS6209733RWKR	VQFN-HR	RWK	11	3000	341.0	182.0	80.0
TPS6209733RWKT	VQFN-HR	RWK	11	250	341.0	182.0	80.0

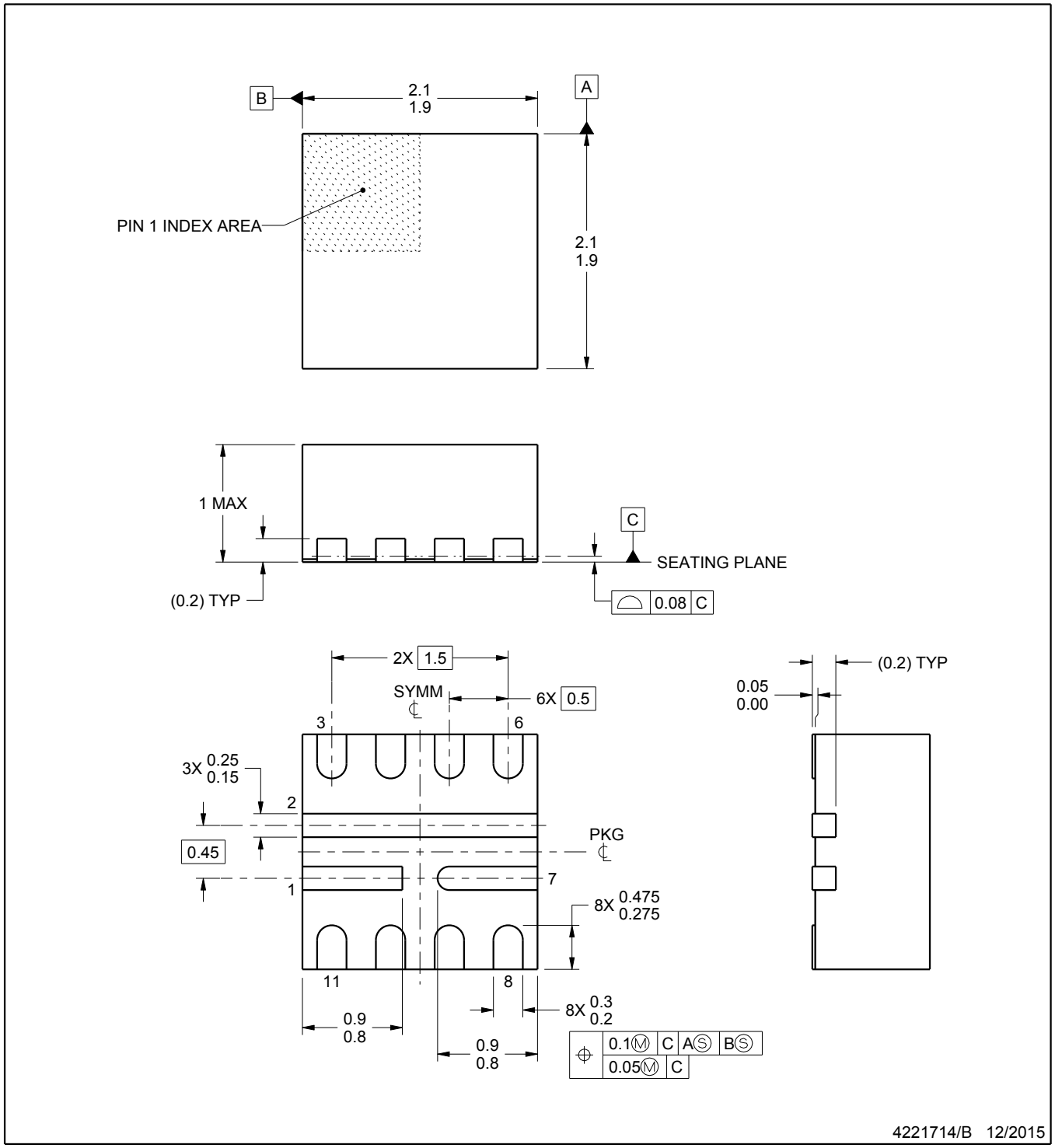

NOTES:

1. All linear dimensions are in millimeters. Any dimensions in parenthesis are for reference only. Dimensioning and tolerancing per ASME Y14.5M.
2. This drawing is subject to change without notice.
3. Package pin numbers 1, 2, and 7 must be soldered to the printed circuit board for thermal and mechanical performance. Refer to product data sheet for specific thermal pad and via recommendations.

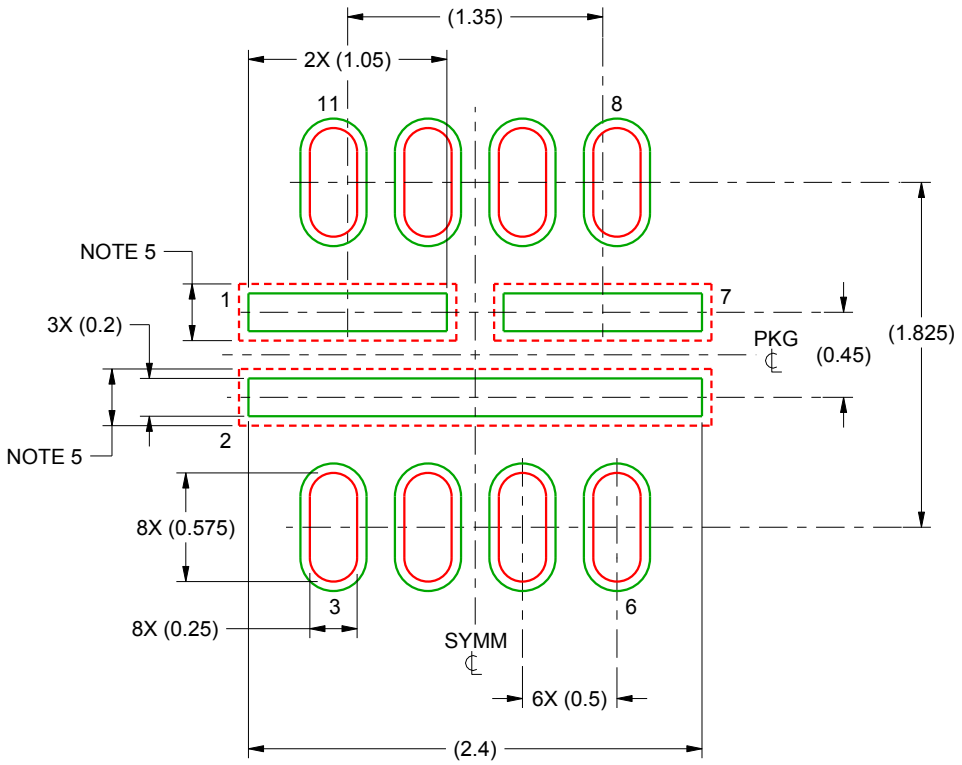

LAND PATTERN EXAMPLE
SCALE:25X

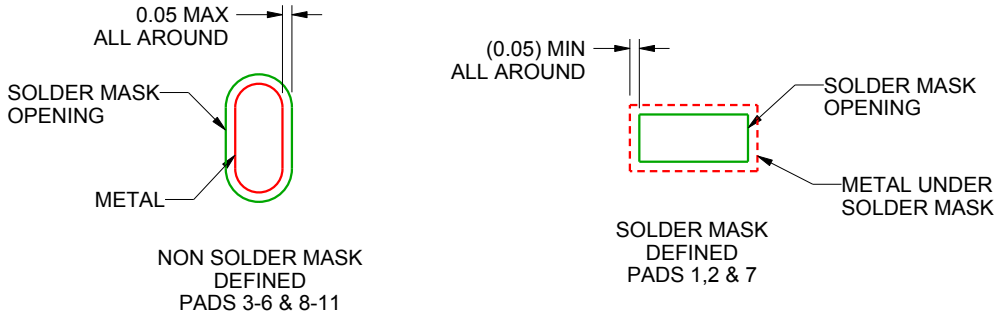

SOLDER MASK DETAILS

4221714/B 12/2015

NOTES: (continued)

4. For more information, see Texas Instruments literature number SLUA271 (www.ti.com/lit/slua271).
5. Size of metal pad may vary due to creepage requirements.

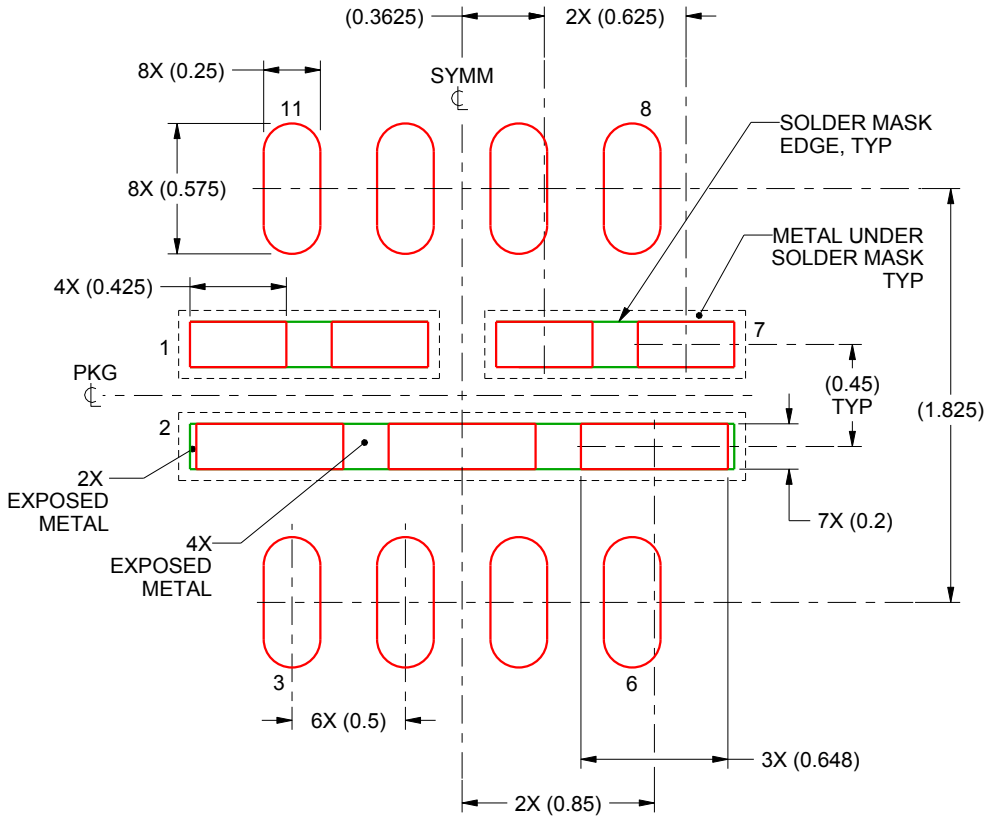

SOLDER PASTE EXAMPLE
BASED ON 0.1 mm THICK STENCIL

PADS 1,2 & 7
81% PRINTED SOLDER COVERAGE BY AREA UNDER PACKAGE
SCALE:30X

4221714/B 12/2015

NOTES: (continued)

6. Laser cutting apertures with trapezoidal walls and rounded corners may offer better paste release. IPC-7525 may have alternate design recommendations.

IMPORTANT NOTICE AND DISCLAIMER

TI PROVIDES TECHNICAL AND RELIABILITY DATA (INCLUDING DATASHEETS), DESIGN RESOURCES (INCLUDING REFERENCE DESIGNS), APPLICATION OR OTHER DESIGN ADVICE, WEB TOOLS, SAFETY INFORMATION, AND OTHER RESOURCES “AS IS” AND WITH ALL FAULTS, AND DISCLAIMS ALL WARRANTIES, EXPRESS AND IMPLIED, INCLUDING WITHOUT LIMITATION ANY IMPLIED WARRANTIES OF MERCHANTABILITY, FITNESS FOR A PARTICULAR PURPOSE OR NON-INFRINGEMENT OF THIRD PARTY INTELLECTUAL PROPERTY RIGHTS.

These resources are intended for skilled developers designing with TI products. You are solely responsible for (1) selecting the appropriate TI products for your application, (2) designing, validating and testing your application, and (3) ensuring your application meets applicable standards, and any other safety, security, regulatory or other requirements.

These resources are subject to change without notice. TI grants you permission to use these resources only for development of an application that uses the TI products described in the resource. Other reproduction and display of these resources is prohibited. No license is granted to any other TI intellectual property right or to any third party intellectual property right. TI disclaims responsibility for, and you fully indemnify TI and its representatives against any claims, damages, costs, losses, and liabilities arising out of your use of these resources.

TI’s products are provided subject to TI’s Terms of Sale, TI’s General Quality Guidelines, or other applicable terms available either on ti.com or provided in conjunction with such TI products. TI’s provision of these resources does not expand or otherwise alter TI’s applicable warranties or warranty disclaimers for TI products. Unless TI explicitly designates a product as custom or customer-specified, TI products are standard, catalog, general purpose devices.

TI objects to and rejects any additional or different terms you may propose.

Copyright © 2025, Texas Instruments Incorporated

Last updated 10/2025