TPS7A43 50-mA, 85-V, Ultra-Low I_Q, Low-Dropout Linear Voltage Regulator With Power-Good, Precision Enable, and Selectable Mid-Output Rail

1 Features

- Input voltage: 4 V to 85 V
- Wide output (OUT) voltage range:
  - Adjustable: 1.24 V to 14.5 V
  - Fixed: 1.25 V to 5.0 V
- Selectable intermediate output (MID_OUT):
  - 10 V, 12 V, 15 V
- Maximum output current:
  - 50 mA (shared between OUT and MID_OUT)
- 1% accuracy over temperature
- Ultra-low I_Q: 5.5 µA
- Precision enable
- Power-good (PG) output (open drain)
- Thermal shutdown and overcurrent protection
- Operating junction temperature: –40°C to +125°C
- Package: HVSSOP-10 ($R_{\theta JA}$ = 53.7°C/W)

2 Applications

- Cordless power tools
- DC motors and fans
- Programmable logic controllers (PLCs)
- Field transmitter and process sensors
- Smoke and heat detectors
- EV charging infrastructure
- Battery packs

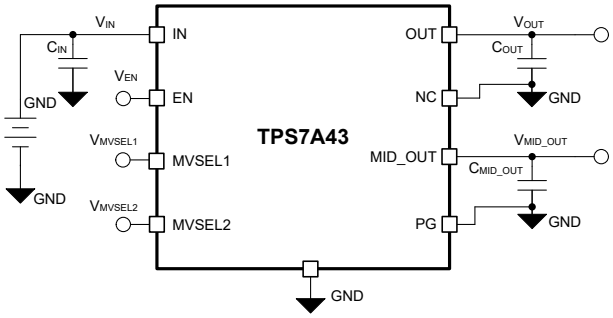

Typical Application Circuit

3 Description

The TPS7A43 low-dropout (LDO) linear voltage regulator introduces a combination of a 4-V to 85-V input voltage range with very-low quiescent current.

This device can support a wide range of input voltages (for example, a 15-s battery and 24-V to 48-V line power) and withstand line transient voltages up to 85 V. These features help modern applications meet increasingly stringent energy requirements, and help extend battery life in portable-power solutions.

The TPS7A43 output (OUT) is available in both fixed and adjustable output versions, which can regulate from 1.24 V to 14.5 V at 1% accuracy. The device also provides a second intermediate output (MID_OUT) that can be set to 10 V, 12 V, and 15 V using the MVSEL pins and can be used to bias gate drivers in place of a discrete regulator.

The TPS7A43 features a precision enable input that helps enable or disable the LDO at a fixed and accurate threshold voltage using a resistor divider from the input.

The power-good (PG) output is used to monitor the voltage at the feedback pin to indicate the status of the output voltage. The EN input and PG output can be used for sequencing multiple power sources in the system.

Package Information(1)

PART NUMBER	PACKAGE	BODY SIZE (NOM)
TPS7A43	DGQ (HVSSOP, 10)	3.00 mm × 3.00 mm

(1) For all available packages, see the package option addendum at the end of the data sheet.

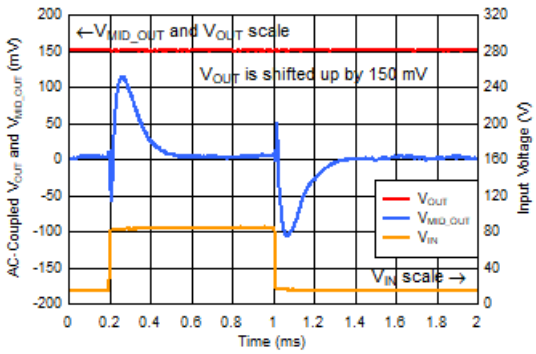

Line Transient With V_{MID_OUT} = 12 V, V_{OUT} = 3.3 V, I_{OUT} = 50 mA

An IMPORTANT NOTICE at the end of this data sheet addresses availability, warranty, changes, use in safety-critical applications, intellectual property matters and other important disclaimers. PRODUCTION DATA.

Table of Contents

1 Features....1
2 Applications....1
3 Description....1
4 Revision History....2
5 Pin Configuration and Functions....3
6 Specifications....4
6.1 Absolute Maximum Ratings....4
6.2 ESD Ratings....4
6.3 Recommended Operating Conditions....5
6.4 Thermal Information....5
6.5 Electrical Characteristics....6
6.6 Typical Characteristics....8
7 Detailed Description....15
7.1 Overview....15
7.2 Functional Block Diagrams....15
7.3 Feature Description....16
7.4 Device Functional Modes....20
8 Application and Implementation....21
8.1 Application Information....21
8.2 Typical Application....23
8.3 Power Supply Recommendations....25
8.4 Layout....25
9 Device and Documentation Support....27
9.1 Device Support....27
9.2 Documentation Support....27
9.3 Receiving Notification of Documentation Updates....27
9.4 Support Resources....27
9.5 Trademarks....27
9.6 Electrostatic Discharge Caution....27
9.7 Glossary....28
10 Mechanical, Packaging, and Orderable Information....28

4 Revision History

NOTE: Page numbers for previous revisions may differ from page numbers in the current version.

Changes from Revision A (September 2022) to Revision B (November 2022)	Page
• Changed document title	1

Changes from Revision * (December 2020) to Revision A (September 2022)	Page
• Changed document status from *Advance Information* to *Production Data*	1

Copyright © 2022 Texas Instruments Incorporated

5 Pin Configuration and Functions

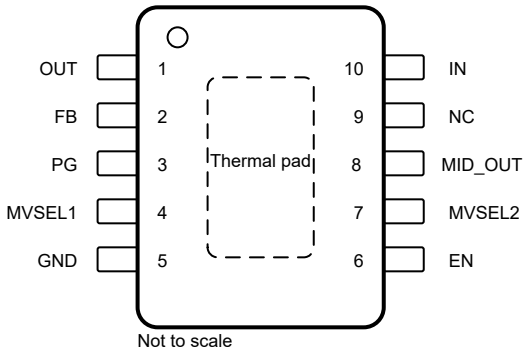

Figure 5-1. DGQ Package (Adjustable), 10-Pin HVSSOP (Top View)

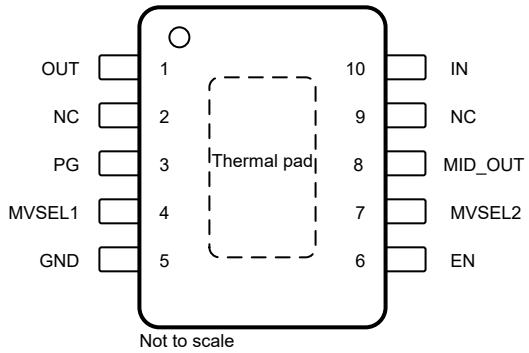

Figure 5-2. DGQ Package (Fixed), 10-Pin HVSSOP (Top View)

Table 5-1. Pin Functions

PIN			TYPE	DESCRIPTION
NAME	DGQ (Adjustable)	DGQ (Fixed)		
EN	6	6	Input	Precision enable pin. Driving this pin higher than $V_{EN(HI)}$ enables the device. Driving this pin lower than $V_{EN(LOW)}$ disables the device. This pin can be left floating to enable the device because the device features an internal pullup current source. If this pin is tied to the IN pin then the input voltage must not exceed 18 V; see the *Recommended Operating Conditions* table.
FB	2	—	Input	Feedback pin. Input to the control-loop error amplifier for the (OUT) output. This pin is used to set the output voltage of the device with the use of external resistors. For adjustable-voltage version devices only. This pin must not be left floating.
GND	5	5	—	Ground pin.
IN	10	10	Input	Input pin. For best transient response and to minimize input impedance, use the recommended value or larger ceramic capacitor from IN to ground; see the *Recommended Operating Conditions* table. Place the input capacitor as close to the IN and GND pins of the device as possible.
MID_OUT	8	8	Output	MID output pin. A capacitor is required from MID_OUT to ground for stability. For best transient response, use the nominal recommended value or larger capacitor from MID_OUT to ground. Follow the recommended capacitor value as listed in the *Recommended Operating Conditions* table. Place the MID output capacitor as close to the MID_OUT and GND pins of the device as possible.
MVSEL1	4	4	Input	MID_OUT voltage-select pin. The MVSEL1 pin and MVSEL2 pin are used to set the MID_OUT voltage; see the *MID_OUT Voltage Setting* section for details on how to set the MID_OUT voltage using these pins. Do not float this pin, instead tie this pin to GND if not used to set V_{MID_OUT}.
MVSEL2	7	7	Input	MID_OUT voltage-select pin. The MVSEL2 pin and MVSEL1 pin are used to set the MID_OUT voltage; see the *MID_OUT Voltage Setting* section for details on how to set the MID_OUT voltage using these pins. Do not float this pin, instead tie this pin to GND if not used to set V_{MID_OUT}.
NC	9	9	—	No internal connection. This pin must be left floating to observe high voltage clearance between the IN and MID_OUT pins.
NC	—	2	—	No internal connection. This pin can be left floating or tied to the GND plane to improve thermal performance.
OUT	1	1	Output	Output pin. A capacitor is required from OUT to ground for stability. For best transient response, use the nominal recommended value or larger capacitor from OUT to ground. Follow the recommended capacitor value as listed in the *Recommended Operating Conditions* table. Place the output capacitor as close to the OUT and GND pins of the device as possible.

Copyright © 2022 Texas Instruments Incorporated

Table 5-1. Pin Functions (continued)

PIN			TYPE	DESCRIPTION
NAME	DGQ (Adjustable)	DGQ (Fixed)		
PG	3	3	Output	Power-good pin. An open-drain output indicates when the output voltage reaches $V_{IT(PG, RISING)}$; see the *Electrical Characteristics* table. If not used, this pin can be left floating or tied to the GND plane to improve thermal performance.
Thermal pad	Pad	Pad	—	Exposed pad of the package. Connect this pad to ground or leave floating. Connect the thermal pad to a large-area GND plane for improved thermal performance.

6 Specifications

6.1 Absolute Maximum Ratings

over operating free-air temperature range (unless otherwise noted)[1]

		MIN	MAX	UNIT
Voltage[2]	V_{IN}	–0.3	90[3]	V
	V_{OUT} (adjustable version)	–0.3	V_{MID} + 0.3[4]	
	V_{OUT} (fixed version)	–0.3	5.5	
	V_{MID_OUT}	–0.3	V_{IN} + 0.3[5]	
	V_{FB}	–0.3	5.5	
	V_{EN}	–0.3	20	
	V_{MVSEL1}	–0.3	20	
	V_{MVSEL2}	–0.3	20	
	V_{PG}	–0.3	20	
Current	Maximum output	Internally limited		A
	Maximum MID output	Internally limited		
Temperature	Operating junction, T_J	–50	150	°C
	Storage, T_{stg}	–65	150	

(1) Operation outside the Absolute Maximum Ratings may cause permanent device damage. Absolute Maximum Ratings do not imply functional operation of the device at these or any other conditions beyond those listed under Recommended Operating Conditions. If briefly operating outside the Recommended Operating Conditions but within the Absolute Maximum Ratings, the device may not sustain damage, but it may not be fully functional – this may affect device reliability, functionality, performance, and shorten the device lifetime.
(2) All voltages with respect to GND.
(3) Absolute maximum voltage, withstand 90 V for 200 ms.
(4) V_{MID_OUT} + 0.3 V or 20 V (whichever is smaller).
(5) V_{IN} + 0.3 V or 20 V (whichever is smaller).

6.2 ESD Ratings

			VALUE	UNIT
$V_{(ESD)}$	Electrostatic discharge	Human body model (HBM), per ANSI/ESDA/JEDEC JS-001[1]	±2000	V
		Charged device model (CDM), per JEDEC specification JESD22-C101[2]	±750	

(1) JEDEC document JEP155 states that 2-kV HBM allows safe manufacturing with a standard ESD control process.
(2) JEDEC document JEP157 states that 500-V CDM allows safe manufacturing with a standard ESD control process.

Copyright © 2022 Texas Instruments Incorporated

6.3 Recommended Operating Conditions

		MIN	NOM	MAX	UNIT
V_{IN}	Input voltage	4		85	V
V_{MID_OUT}	MID output voltage	10		15	V
V_{OUT}	Output voltage (adjustable version)	1.24		V_{MID_OUT} – $V_{DO(OUT)}$	V
V_{OUT}	Output voltage (fixed version)	1.25		5.5	V
I_{OUT}	Output current	0		50 – I_{MID_OUT}	mA
I_{MID_OUT}	MID rail output current	0		50	mA
V_{MVSEL1}	MID voltage select input voltage 1	0		18	V
V_{MVSEL2}	MID voltage select input voltage 2	0		18	V
V_{EN}	Enable voltage	0		18	V
V_{PG} (1)	Power-good voltage	0		18	V
C_{IN} (2)	Input capacitor		0.1		µF
C_{OUT} (2)	Output capacitor	1	2.2	100	µF
C_{MID_OUT} (2) (3)	MID output capacitor	3 × C_{OUT}			µF
T_J	Operating junction temperature	–40		125	°C

(1) Select pullup resistor to limit PG pin sink current when PG output is driven low. See the *Power Good* section for details.
(2) All capacitor values are assumed to derate to 50% of the nominal capacitor value.
(3) Maintain a 3:1 ratio between C_{MID_OUT} vs C_{OUT} for stability.

6.4 Thermal Information

THERMAL METRIC(1)		TPS7A43 HVSSOP (DGQ) 8 PINS	UNIT
$R_{\theta JA}$	Junction-to-ambient thermal resistance	53.7	°C/W
$R_{\theta JC(top)}$	Junction-to-case (top) thermal resistance	76.6	°C/W
$R_{\theta JB}$	Junction-to-board thermal resistance	26.8	°C/W
Ψ_{JT}	Junction-to-top characterization parameter	3.6	°C/W
Ψ_{JB}	Junction-to-board characterization parameter	26.7	°C/W
$R_{\theta JC(bot)}$	Junction-to-case (bottom) thermal resistance	9.6	°C/W

(1) For more information about traditional and new thermal metrics, see the Semiconductor and IC Package Thermal Metrics application report.

6.5 Electrical Characteristics

specified at T_J = –40°C to +125°C, V_{IN} = $V_{OUT(nom)}$ + 1.5V or 4V, whichever is greater, FB tied to OUT (adjustable version only), I_{OUT} = 1 mA, I_{MID_OUT} = 0mA, V_{EN} = 2 V, V_{MVSEL1} = 0.9 V, V_{MVSEL2} = 0.9 V, C_{IN} = 1 µF, C_{MID_OUT} = 4.7 µF, and C_{OUT} = 1 µF (unless otherwise noted); typical values are at T_J = 25°C

PARAMETER		TEST CONDITIONS		MIN	TYP	MAX	UNIT
ΔV_{OUT}	Output voltage accuracy	Adjustable version, V_{OUT} = V_{FB}		1.23	1.24	1.25	V
ΔV_{OUT}		Fixed output version, T_J = 25°C		–0.5		0.5	%
		Fixed output version		–0.75		0.75	
V_{FB}	Feedback voltage	Adjustable version only			1.24		V
$\Delta V_{OUT(\Delta VIN)}$	Line regulation(1)	($V_{OUT(nom)}$ + 1 V or 4 V) ≤ V_{IN} ≤ 85 V		–0.05		0.05	%
		$V_{MID_OUT(nom)}$ + 1.5 V ≤ V_{IN} ≤ 85 V		–0.05		0.05	
$\Delta V_{OUT(\Delta IOUT)}$	Load regulation	1 mA ≤ I_{OUT} ≤ 50 mA, I_{MID_OUT} = 0 mA		–0.15		0.10	%
ΔV_{MID_OUT}	MID output voltage accuracy	V_{IN} = V_{MID_OUT} + 1.5 V	V_{MVSEL1} ≤ $V_{MVSEL1(LOW)}$, V_{MVSEL2} ≤ $V_{MVSEL2(LOW)}$	14.4	15	15.6	V
			V_{MVSEL1} ≤ $V_{MVSEL1(LOW)}$ or V_{MVSEL1} ≥ $V_{MVSEL1(HIGH)}$, V_{MVSEL2} ≥ $V_{MVSEL2(HIGH)}$	11.5	12	12.5	
			V_{MVSEL1} ≥ $V_{MVSEL1(HIGH)}$, V_{MVSEL2} ≤ $V_{MVSEL2(LOW)}$	9.6	10	10.4	
$\Delta V_{MID_OUT(\Delta VIN)}$	Line regulation of MID output(1)	($V_{MID_OUT(nom)}$) + 1.5 V ≤ V_{IN} ≤ 85 V, I_{MID_OUT} = 1 mA, I_{OUT} = 0 mA		–0.1		0.1	%
$\Delta V_{MID_OUT(\Delta IOUT)}$	Load regulation of MID output	1 mA ≤ I_{MID_OUT} ≤ 50 mA V_{IN} = V_{MID_OUT} + 1.5 V I_{OUT} = 0 mA		–0.2		0.1	%
$V_{DO(OUT)}$	Dropout voltage of V_{IN} to V_{OUT} (2)	I_{OUT} = 50 mA				800	mV
$V_{DO(OUT)}$	Dropout voltage of V_{MID_OUT} to V_{OUT} (2)	I_{OUT} = 50 mA				200	mV
$V_{DO(MID_OUT)}$	Dropout voltage of V_{IN} to V_{MID_OUT} (3)	I_{MID_OUT} = 50 mA				600	mV
$I_{CL(OUT)}$	Output current limit	V_{OUT} = 0.9 × $V_{OUT(nom)}$		100	125	145	mA
$I_{CL(MID_OUT)}$	MID output current limit	V_{OUT} = 0.9 × $V_{MID_OUT(nom)}$, V_{IN} = V_{MID_OUT} + 1.5 V		118	145	165	mA
I_{GND}	Ground pin current	I_{OUT} = I_{MID_OUT} = 0 mA, V_{IN} = V_{MID_OUT} + 1.5 V	T_J = 25°C		5.5	7	µA
			T_J = –40°C to +125°C			9	
		I_{OUT} = 50 mA, V_{IN} = V_{MID_OUT} + 1.5 V			185		
$I_{SHUTDOWN}$	Shutdown current	V_{EN} ≤ $V_{EN(LOW)}$, V_{IN} = $V_{MID_OUT(nom)}$ + 1.5 V I_{OUT} = I_{MID_OUT} = 0 mA	T_J = –40°C to +85°C		710	1600	nA
			T_J = –40°C to +125°C			2100	nA
$I_{SHUTDOWN}$	Shutdown current	V_{EN} ≤ $V_{EN(LOW)}$, V_{IN} =85 V I_{OUT} = I_{MID_OUT} = 0 mA	T_J = –40°C to +85°C		710	1900	nA
			T_J = –40°C to +125°C			2500	
I_{FB}	FB pin current				10		nA
I_{MVSEL1}	MVSEL1 pin current	V_{MVSEL1} = 18 V			10		nA
I_{MVSEL2}	MVSEL2 pin current	V_{MVSEL2} = 18 V			10		nA
I_{EN}	EN pin current	V_{EN} = 18 V			10		nA
$V_{MVSEL1(HIGH)}$	MVSEL1 pin high-level input voltage			0.9			V
$V_{MVSEL1(LOW)}$	MVSEL1 pin low-level input voltage					0.3	V

Copyright © 2022 Texas Instruments Incorporated

6.5 Electrical Characteristics (continued)

specified at T_J = –40°C to +125°C, V_{IN} = $V_{OUT(nom)}$ + 1.5V or 4V, whichever is greater, FB tied to OUT (adjustable version only), I_{OUT} = 1 mA, I_{MID_OUT} = 0mA, V_{EN} = 2 V, V_{MVSEL1} = 0.9 V, V_{MVSEL2} = 0.9 V, C_{IN} = 1 µF, C_{MID_OUT} = 4.7 µF, and C_{OUT} = 1 µF (unless otherwise noted); typical values are at T_J = 25°C

PARAMETER		TEST CONDITIONS		MIN	TYP	MAX	UNIT
$V_{MVSEL2(HIGH)}$	MVSEL2 pin high-level input voltage			0.9			V
$V_{MVSEL2(LOW)}$	MVSEL2 pin low-level input voltage					0.3	V
$V_{EN(HI)}$	Enable rising threshold	Device enabled		1.15	1.24	1.35	V
$V_{EN(LOW)}$	Enable falling threshold	Device disabled		1.11	1.19	1.28	V
$V_{EN(HYST)}$	Enable pin hysteresis				50		mV
$V_{IT(PG,RISING)}$	PG pin threshold rising	R_{PULLUP} = 10 kΩ, V_{OUT} rising, $V_{IN} \geq V_{UVLO(RISING)}$		88	93	96.5	%V_{OUT}
$V_{HYS(PG)}$	PG pin hysteresis	R_{PULLUP} = 10 kΩ, V_{OUT} falling, $V_{IN} \geq V_{UVLO(RISING)}$			3		%V_{OUT}
$V_{IT(PG,FALLING)}$	PG pin threshold falling	R_{PULLUP} = 10 kΩ, V_{OUT} falling, $V_{IN} \geq V_{UVLO(RISING)}$		84	90	94.5	%V_{OUT}
$V_{OL(PG)}$	PG pin low level output voltage	$V_{OUT} < V_{IT(PG,FALLING)}$, $I_{PG\text{-}SINK}$ = 500 µA				0.4	V
$I_{LKG(PG)}$	PG pin leakage current	$V_{OUT} > V_{IT(PG,RISING)}$, V_{PG} = 18 V			5	130	nA
$PSRR_{(OUT)}$	Power-supply rejection ratio of OUT rail	I_{OUT} = 20 mA	f = 10 Hz		76		dB
			f = 100 Hz		67		dB
			f = 1 kHz		82		dB
			f = 100 kHz		73		dB
$PSRR_{(MID_OUT)}$	Power-supply rejection ratio of MID_OUT rail	I_{MID_OUT} = 20 mA	f = 10 Hz		61		dB
			f = 100 Hz		64		dB
			f = 1 kHz		55		dB
			f = 100 kHz		47		dB
V_n	Output noise voltage	BW = 10 Hz to 100 kHz, V_{OUT} = 1.24 V			124		µV_{RMS}
$T_{SD(shutdown)}$	Thermal shutdown temperature	Shutdown, temperature increasing			170		°C

(1) Line regulation from Input of the LDO to the final output of the LDO.
(2) V_{DO} is measured with V_{IN} = 0.95 × $V_{OUT(nom)}$ for fixed output voltage versions. V_{DO} is not measured for fixed output voltage versions when V_{OUT} ≤ 3.1 V. For the adjustable output device, V_{DO} is measured with V_{FB} = 0.95 × $V_{FB(nom)}$.
(3) $V_{DO(MID_OUT)}$ is measured with V_{IN} = 0.95 × $V_{MID_OUT(nom)}$ for Mid output voltages.

6.6 Typical Characteristics

at operating temperature T_J = 25°C, I_{OUT} = 1 mA, I_{MID_OUT} = 0 mA, V_{EN} = 2 V, V_{MVSEL1} = 0.9 V, V_{MVSEL2} = 0.9 V, C_{IN} = 1 µF, C_{MID_OUT} = 4.7 µF, C_{OUT} = 1 µF, and V_{IN} = V_{MID_OUT} + 1.5 V (unless otherwise noted); typical values are at T_J = 25°C

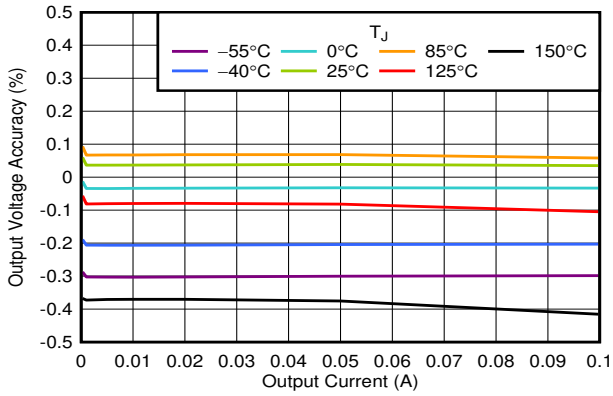

V_{OUT} = 1.24 V (adjustable)

Figure 6-1. V_{OUT} Accuracy vs I_{OUT}

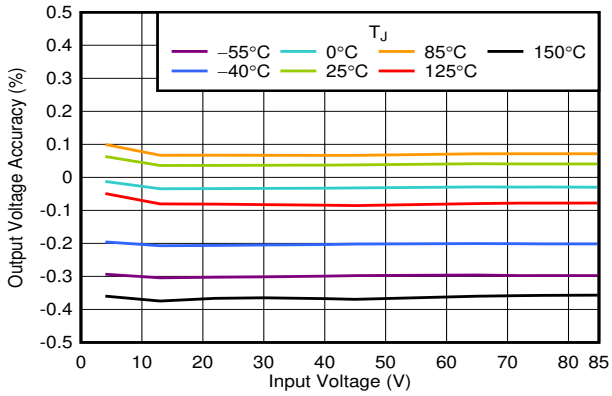

V_{OUT} = 1.24 V (adjustable)

Figure 6-2. V_{OUT} Accuracy vs V_{IN}

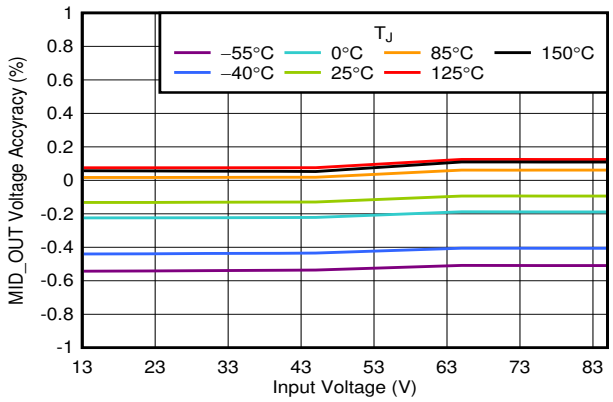

V_{MID_OUT} = 12 V

Figure 6-3. V_{MID_OUT} Accuracy vs V_{IN}

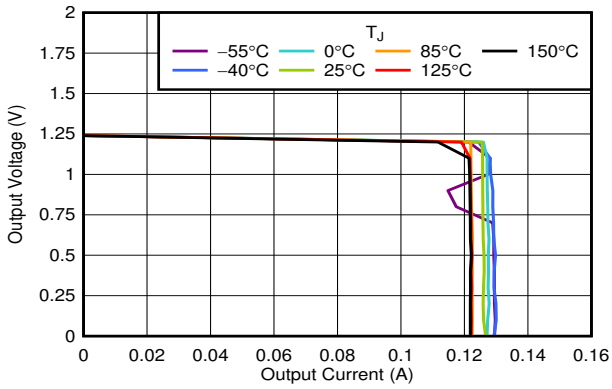

V_{OUT} = 1.24 V (adjustable)

Figure 6-4. V_{OUT} vs $I_{CL(OUT)}$

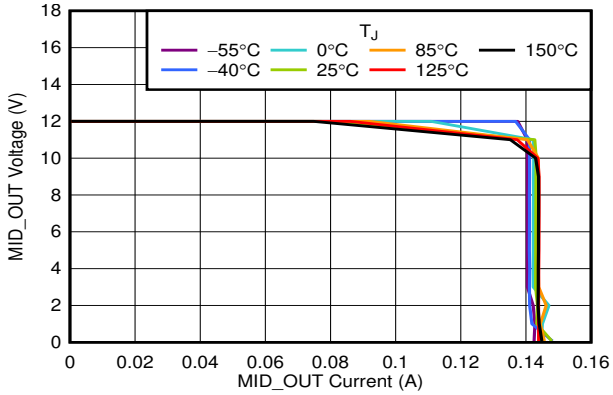

V_{MID_OUT} = 12 V

Figure 6-5. V_{MID_OUT} vs I_{MID_OUT}

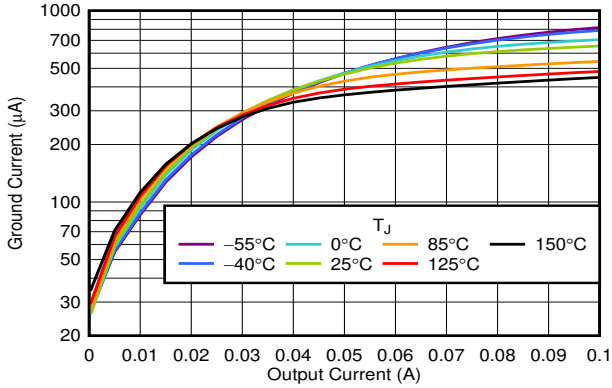

V_{IN} = 11 V, V_{OUT} = 1.24 V (adjustable)

Figure 6-6. I_{GND} vs I_{OUT} (MID_OUT in Dropout)

Copyright © 2022 Texas Instruments Incorporated

6.6 Typical Characteristics (continued)

at operating temperature T_J = 25°C, I_{OUT} = 1 mA, I_{MID_OUT} = 0 mA, V_{EN} = 2 V, V_{MVSEL1} = 0.9 V, V_{MVSEL2} = 0.9 V, C_{IN} = 1 µF, C_{MID_OUT} = 4.7 µF, C_{OUT} = 1 µF, and V_{IN} = V_{MID_OUT} + 1.5 V (unless otherwise noted); typical values are at T_J = 25°C

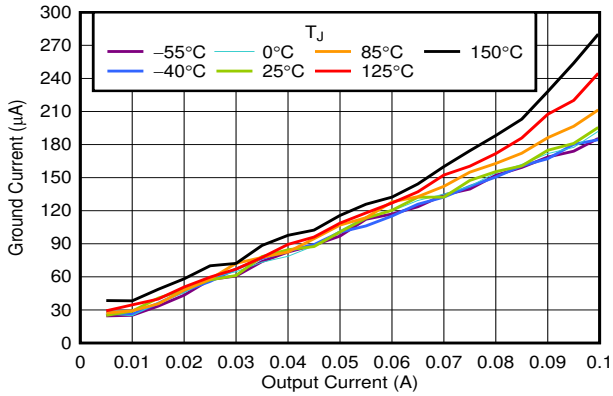

V_{IN} = 16.5 V, V_{MID_OUT} = 15 V, V_{MVSEL1} = V_{MVSEL2} = 0 V, V_{OUT} = 1.24 V (adjustable)

Figure 6-7. I_{GND} vs I_{OUT}

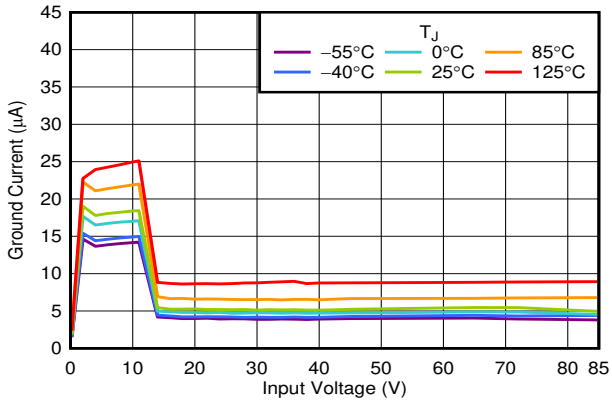

I_{OUT} = 0 mA

Figure 6-8. I_{GND} vs V_{IN}

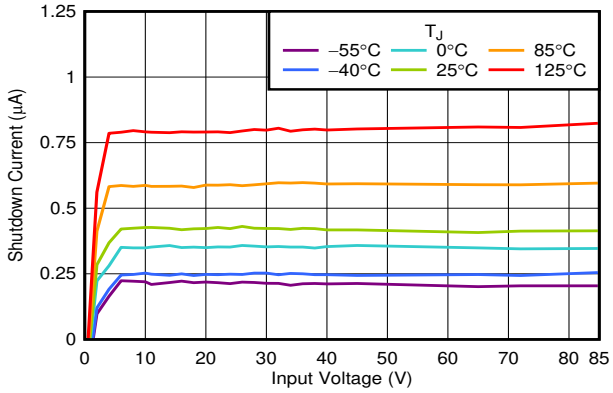

V_{EN} = 1 V

Figure 6-9. $I_{SHUTDOWN}$ vs V_{IN}

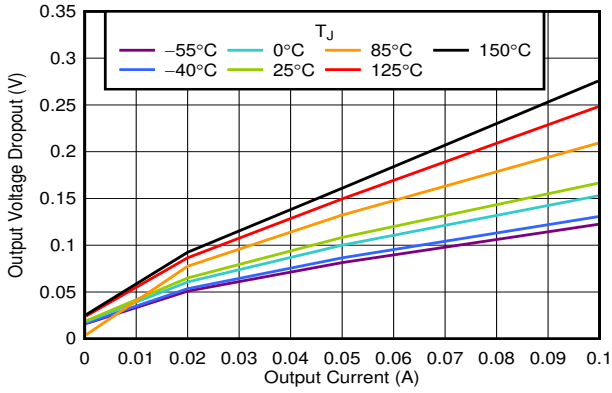

V_{OUT} = 1.24 V (adjustable)

Figure 6-10. $V_{DO(OUT)}$ vs I_{OUT}

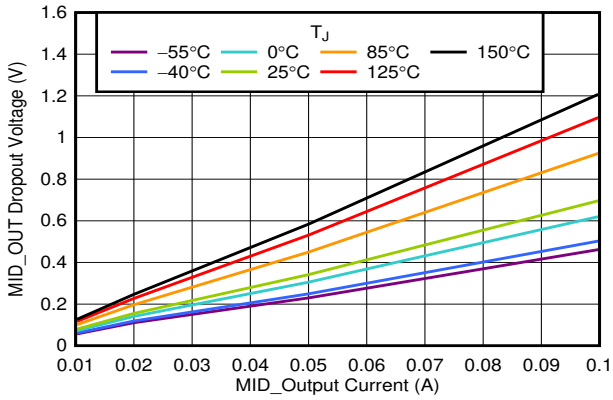

V_{MID_OUT} = 15 V, V_{MVSEL1} = V_{MVSEL2} = 0 V, I_{OUT} = 0 mA

Figure 6-11. $V_{DO(MID_OUT)}$ vs I_{MID_OUT}

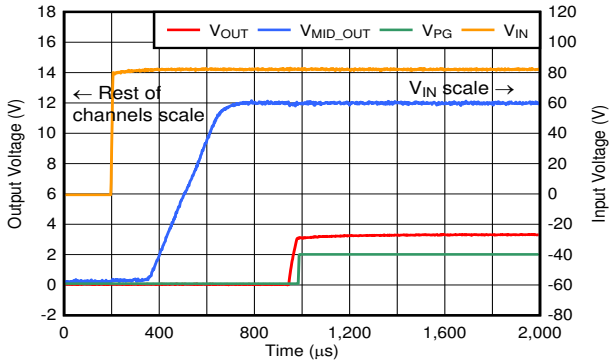

C_{IN} = 0 µF, V_{IN} ramp rate = 10 V/µs, V_{OUT} = 3.3 V, I_{OUT} = 10 mA

Figure 6-12. Fast Start-Up

6.6 Typical Characteristics (continued)

at operating temperature T_J = 25°C, I_{OUT} = 1 mA, I_{MID_OUT} = 0 mA, V_{EN} = 2 V, V_{MVSEL1} = 0.9 V, V_{MVSEL2} = 0.9 V, C_{IN} = 1 µF, C_{MID_OUT} = 4.7 µF, C_{OUT} = 1 µF, and V_{IN} = V_{MID_OUT} + 1.5 V (unless otherwise noted); typical values are at T_J = 25°C

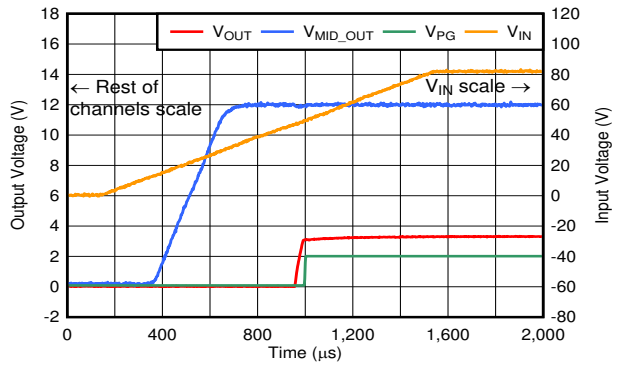

C_{IN} = 0 µF, V_{IN} ramp rate = 45 V/ms, V_{OUT} = 3.3 V, I_{OUT} = 10 mA

Figure 6-13. Slow Start-Up

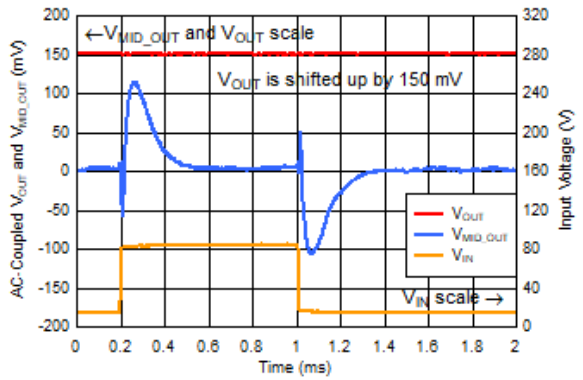

V_{IN} = 15 V to 85 V, V_{IN} ramp rate = 10 V/µs, V_{OUT} = 3.3 V, I_{OUT} = 50 mA

Figure 6-14. Line Transient

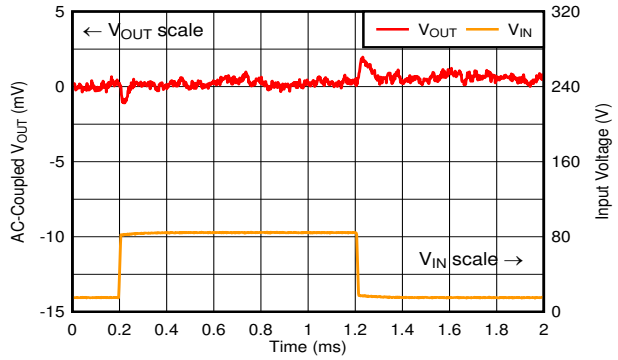

V_{IN} = 15 V to 85 V, V_{IN} ramp rate = 10 V/µs, V_{OUT} = 3.3 V, I_{OUT} = 10 mA

Figure 6-15. Line Transient

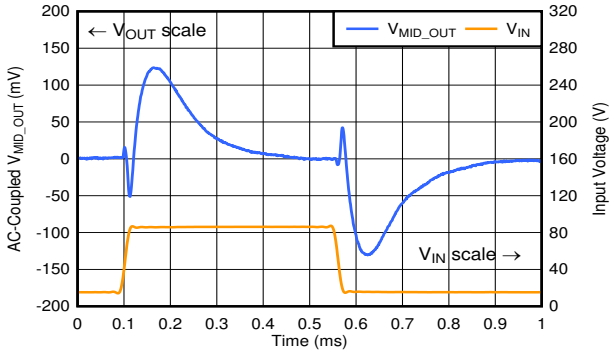

V_{IN} = 15 V to 85 V, V_{IN} ramp rate = 10 V/µs, V_{OUT} = 3.3 V, I_{OUT} = 50 mA

Figure 6-16. Line Transient

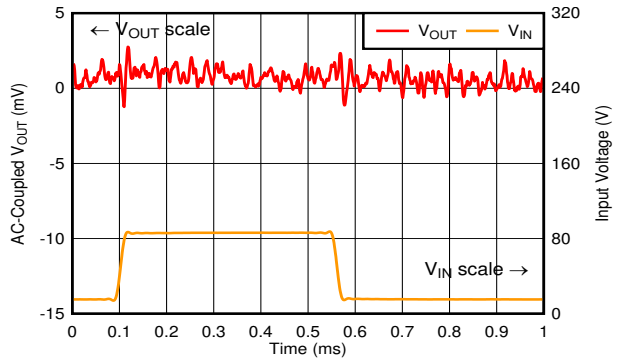

V_{IN} = 15 V to 85 V, V_{IN} ramp rate = 10 V/µs, V_{OUT} = 3.3 V, I_{OUT} = 50 mA

Figure 6-17. Line Transient

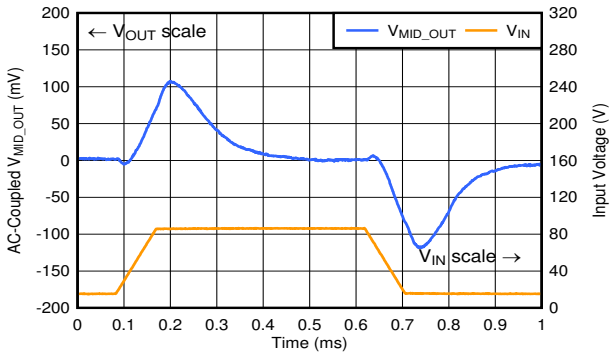

V_{IN} = 4 V to 85 V, V_{IN} ramp rate = 1 V/µs, V_{OUT} = 3.3 V, I_{OUT} = 50 mA

Figure 6-18. Line Transient (V_{MID_OUT} in Dropout)

Copyright © 2022 Texas Instruments Incorporated

6.6 Typical Characteristics (continued)

at operating temperature T_J = 25°C, I_{OUT} = 1 mA, I_{MID_OUT} = 0 mA, V_{EN} = 2 V, V_{MVSEL1} = 0.9 V, V_{MVSEL2} = 0.9 V, C_{IN} = 1 µF, C_{MID_OUT} = 4.7 µF, C_{OUT} = 1 µF, and V_{IN} = V_{MID_OUT} + 1.5 V (unless otherwise noted); typical values are at T_J = 25°C

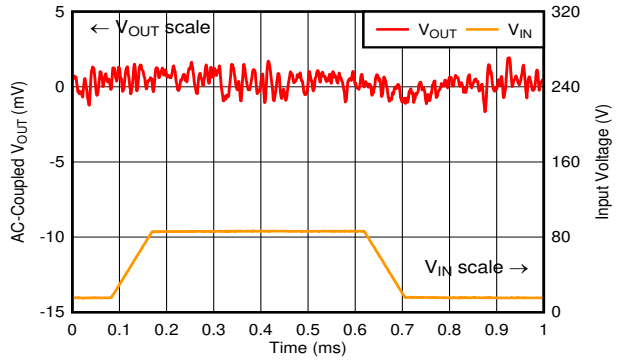

V_{IN} = 4 V to 85 V, V_{IN} ramp rate = 1 V/µs, V_{OUT} = 3.3 V, I_{OUT} = 50 mA

Figure 6-19. Line Transient (V_{MID_OUT} in Dropout)

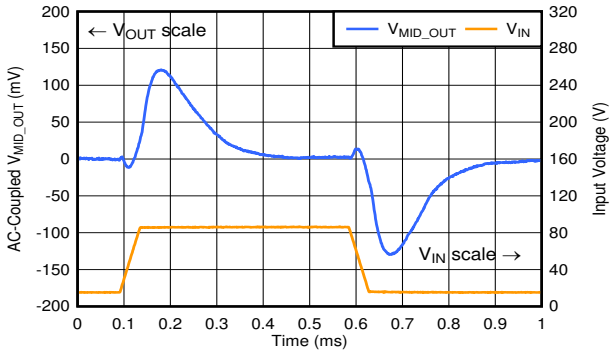

V_{IN} = 4 V to 85 V, V_{IN} ramp rate = 5 V/µs, V_{OUT} = 3.3 V, I_{OUT} = 50 mA

Figure 6-20. Line Transient (V_{MID_OUT} in Dropout)

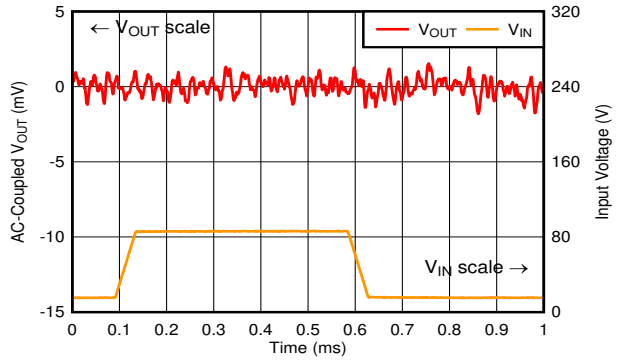

V_{IN} = 4 V to 85 V, V_{IN} ramp rate = 5 V/µs, V_{OUT} = 3.3 V, I_{OUT} = 50 mA

Figure 6-21. Line Transient (V_{MID_OUT} in Dropout)

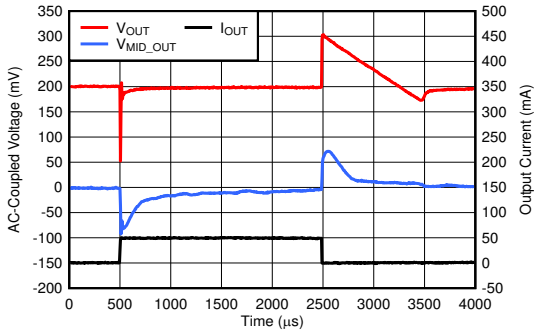

V_{IN} = 65 V, V_{OUT} = 3.3 V, I_{OUT} = 0 mA to 50 mA to 0 mA, I_{OUT} slew rate = 1 A/µs

Figure 6-22. Load Transient

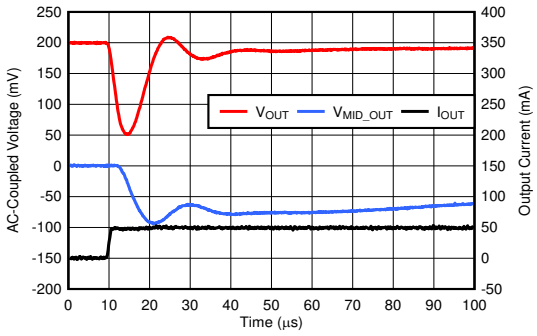

V_{IN} = 65 V, V_{OUT} = 3.3 V, I_{OUT} = 0 mA to 50 mA to 0 mA, I_{OUT} slew rate = 1 A/µs

Figure 6-23. Load Transient (Rising Edge)

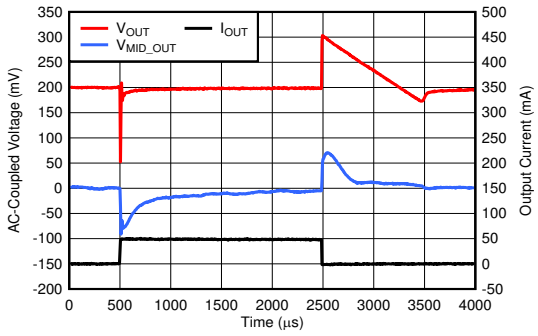

V_{IN} = 65 V, V_{OUT} = 3.3 V, I_{OUT} = 1 mA to 50 mA to 1 mA, I_{OUT} slew rate = 1 A/µs

Figure 6-24. Load Transient

6.6 Typical Characteristics (continued)

at operating temperature T_J = 25°C, I_{OUT} = 1 mA, I_{MID_OUT} = 0 mA, V_{EN} = 2 V, V_{MVSEL1} = 0.9 V, V_{MVSEL2} = 0.9 V, C_{IN} = 1 µF, C_{MID_OUT} = 4.7 µF, C_{OUT} = 1 µF, and V_{IN} = V_{MID_OUT} + 1.5 V (unless otherwise noted); typical values are at T_J = 25°C

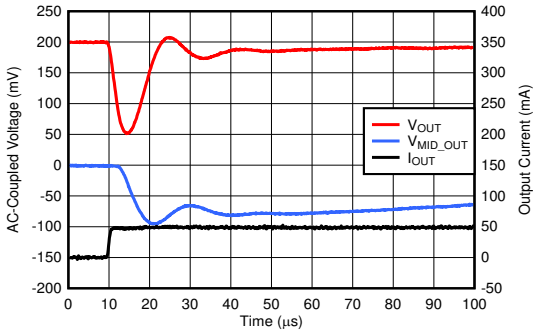

V_{IN} = 65 V, V_{OUT} = 3.3 V, I_{OUT} = 1 mA to 50 mA to 1 mA, I_{OUT} slew rate = 1 A/µs

Figure 6-25. Load Transient (Rising Edge)

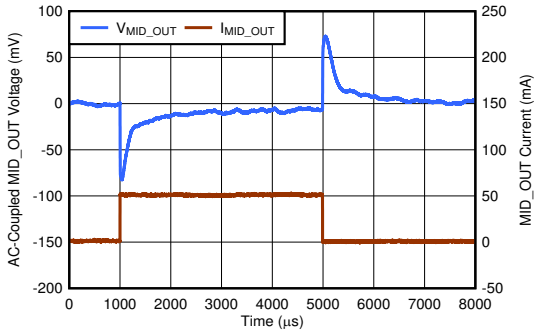

V_{IN} = 65 V, V_{MID_OUT} = 12 V, I_{MID_OUT} = 0 mA to 50 mA to 0 mA, I_{MID_OUT} slew rate = 1 A/µs, I_{OUT} = 0 mA

Figure 6-26. Load Transient (MID_OUT)

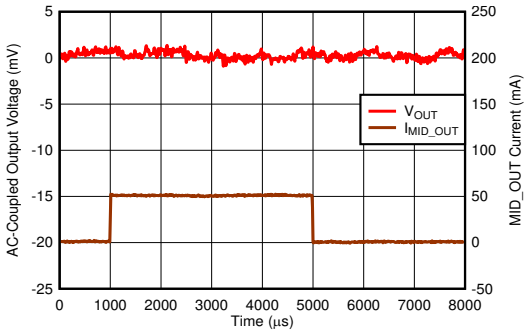

V_{IN} = 65 V, V_{OUT} = 3.3 V, I_{MID_OUT} = 0 mA to 50 mA to 0 mA, I_{MID_OUT} slew rate = 1 A/µs, I_{OUT} = 0 mA

Figure 6-27. Load Transient (MID_OUT)

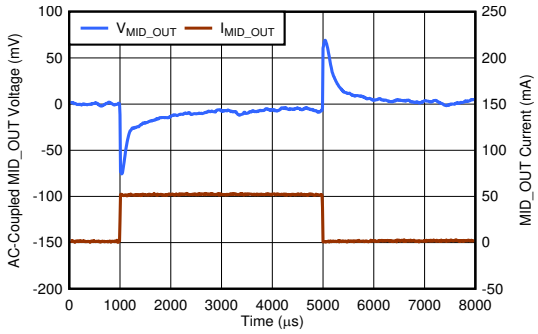

V_{IN} = 65 V, V_{MID_OUT} = 12 V, I_{MID_OUT} = 1 mA to 50 mA to 1 mA, I_{MID_OUT} slew rate = 1 A/µs, I_{OUT} = 0 mA

Figure 6-28. Load Transient (MID_OUT)

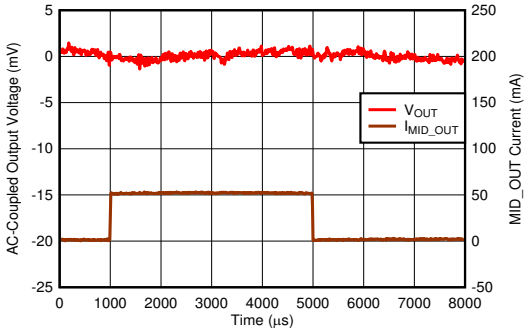

V_{IN} = 65 V, V_{OUT} = 3.3 V, I_{MID_OUT} = 1 mA to 50 mA to 1 mA, I_{MID_OUT} slew rate = 1 A/µs, I_{OUT} = 0 mA

Figure 6-29. Load Transient (MID_OUT)

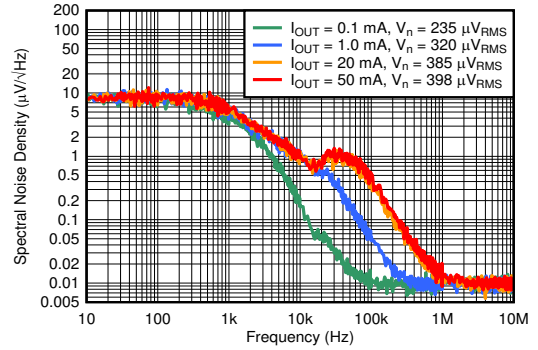

V_{IN} = 13 V, V_{OUT} = 3.3 V, V_{RMS} bandwidth = 10 Hz to 100 kHz

Figure 6-30. Spectral Noise Density vs Frequency and I_{OUT}

Copyright © 2022 Texas Instruments Incorporated

6.6 Typical Characteristics (continued)

at operating temperature T_J = 25°C, I_{OUT} = 1 mA, I_{MID_OUT} = 0 mA, V_{EN} = 2 V, V_{MVSEL1} = 0.9 V, V_{MVSEL2} = 0.9 V, C_{IN} = 1 µF, C_{MID_OUT} = 4.7 µF, C_{OUT} = 1 µF, and V_{IN} = V_{MID_OUT} + 1.5 V (unless otherwise noted); typical values are at T_J = 25°C

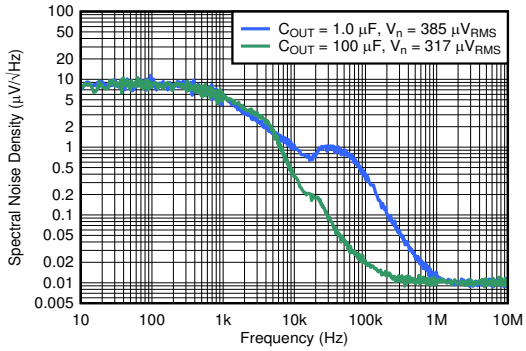

V_{IN} = 13 V, V_{OUT} = 3.3 V, I_{OUT} = 20 mA, V_{RMS} bandwidth = 10 Hz to 100 kHz

Figure 6-31. Spectral Noise Density vs Frequency and C_{OUT}

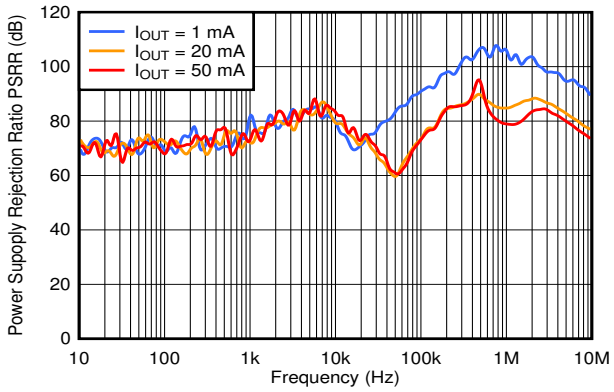

V_{IN} = 13 V, C_{IN} = 0 µF, V_{OUT} = 3.3 V

Figure 6-32. OUT PSRR vs Frequency and I_{OUT}

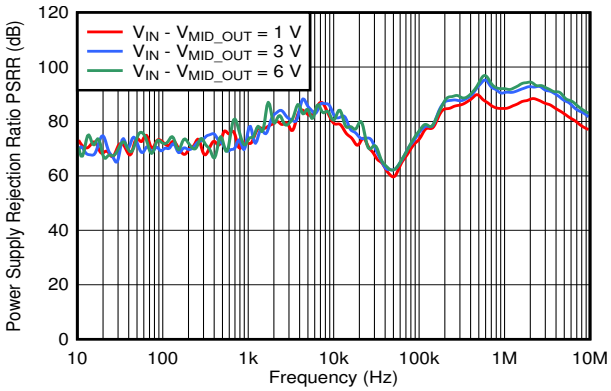

C_{IN} = 0 µF,V_{OUT} = 3.3 V, I_{OUT} = 20 mA

Figure 6-33. OUT PSRR vs Frequency and V_{IN}

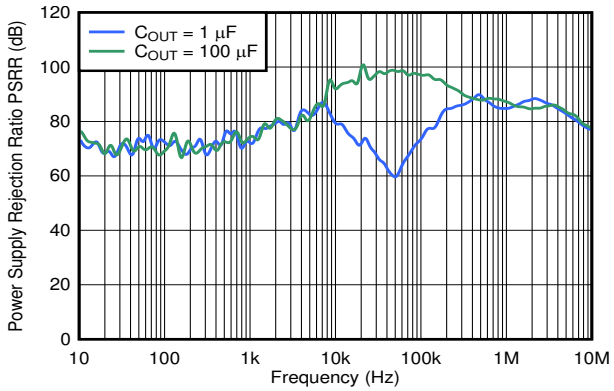

V_{IN} = 13 V, C_{IN} = 0 µF, V_{OUT} = 3.3 V, I_{OUT} = 20 mA

Figure 6-34. OUT PSRR vs Frequency and C_{OUT}

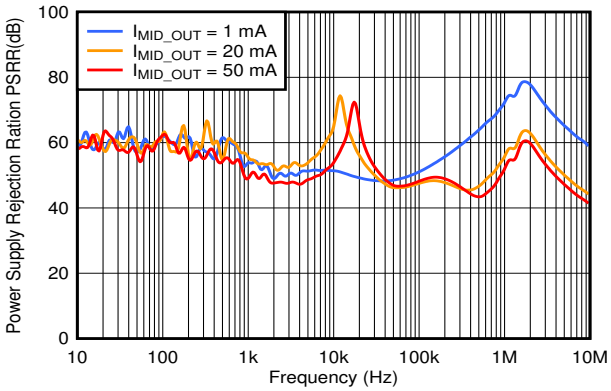

V_{IN} = 13 V, C_{IN} = 0 µF, V_{OUT} = 3.3 V, I_{OUT} = 0 mA

Figure 6-35. MID_OUT PSRR vs Frequency and I_{MID_OUT}

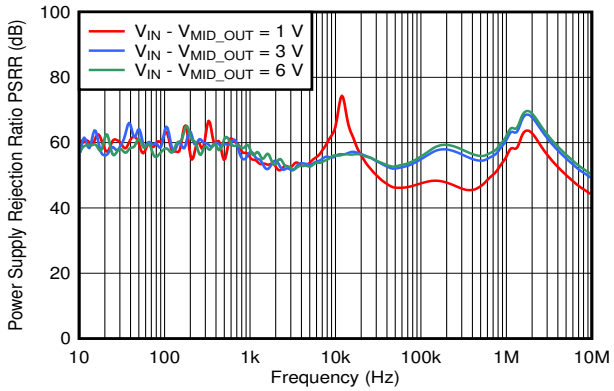

C_{IN} = 0 µF, V_{OUT} = 3.3 V, I_{MID_OUT} = 20 mA, I_{OUT} = 0 mA

Figure 6-36. MID_OUT PSRR vs Frequency and V_{IN}

6.6 Typical Characteristics (continued)

at operating temperature T_J = 25°C, I_{OUT} = 1 mA, I_{MID_OUT} = 0 mA, V_{EN} = 2 V, V_{MVSEL1} = 0.9 V, V_{MVSEL2} = 0.9 V, C_{IN} = 1 µF, C_{MID_OUT} = 4.7 µF, C_{OUT} = 1 µF, and V_{IN} = V_{MID_OUT} + 1.5 V (unless otherwise noted); typical values are at T_J = 25°C

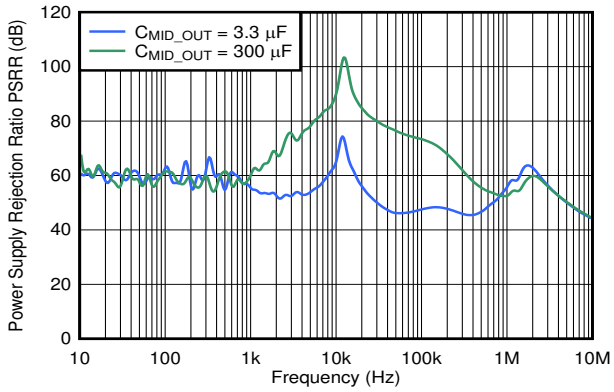

V_{IN} = 13 V, C_{IN} = 0 µF, V_{OUT} = 3.3 V, I_{MID_OUT} = 20 mA, I_{OUT} = 0 mA

Figure 6-37. MID_OUT PSRR vs Frequency and C_{MID_OUT}

Copyright © 2022 Texas Instruments Incorporated

7 Detailed Description

7.1 Overview

The TPS7A43 is an 85-V, low quiescent current, low-dropout (LDO) linear regulator. The very low I_Q performance makes the device an excellent choice for battery-powered or line-power applications that are expected to meet increasingly stringent standby-power standards.

The high accuracy over temperature and power-good indication make this device designed for meeting a broad range of microcontroller power requirements. The device features a selectable MID_OUT voltage pin to provide a secondary voltage to serve as a bias rail for gate drivers.

For increased robustness, the TPS7A43 also incorporates precision enable, output current limit, active discharge, and thermal shutdown protection. The operating junction temperature for this device is from –40°C to +125°C.

7.2 Functional Block Diagrams

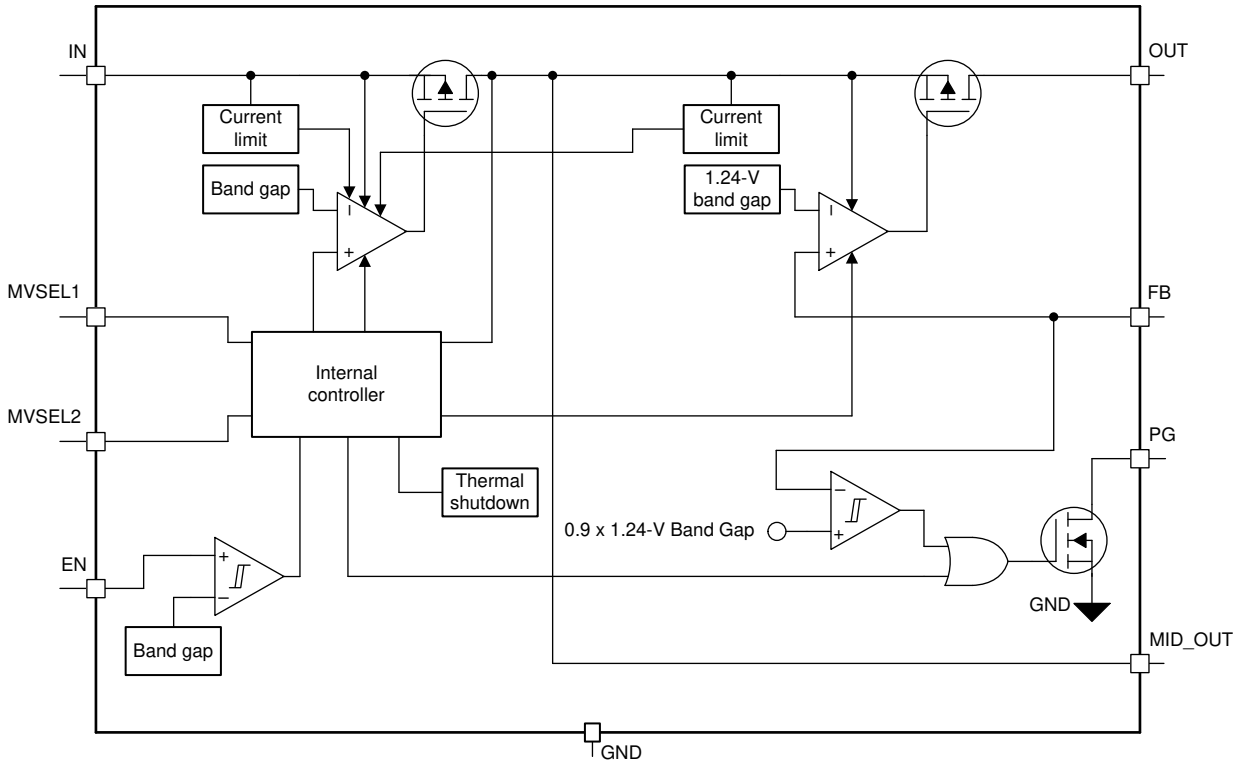

Figure 7-1. Adjustable Version

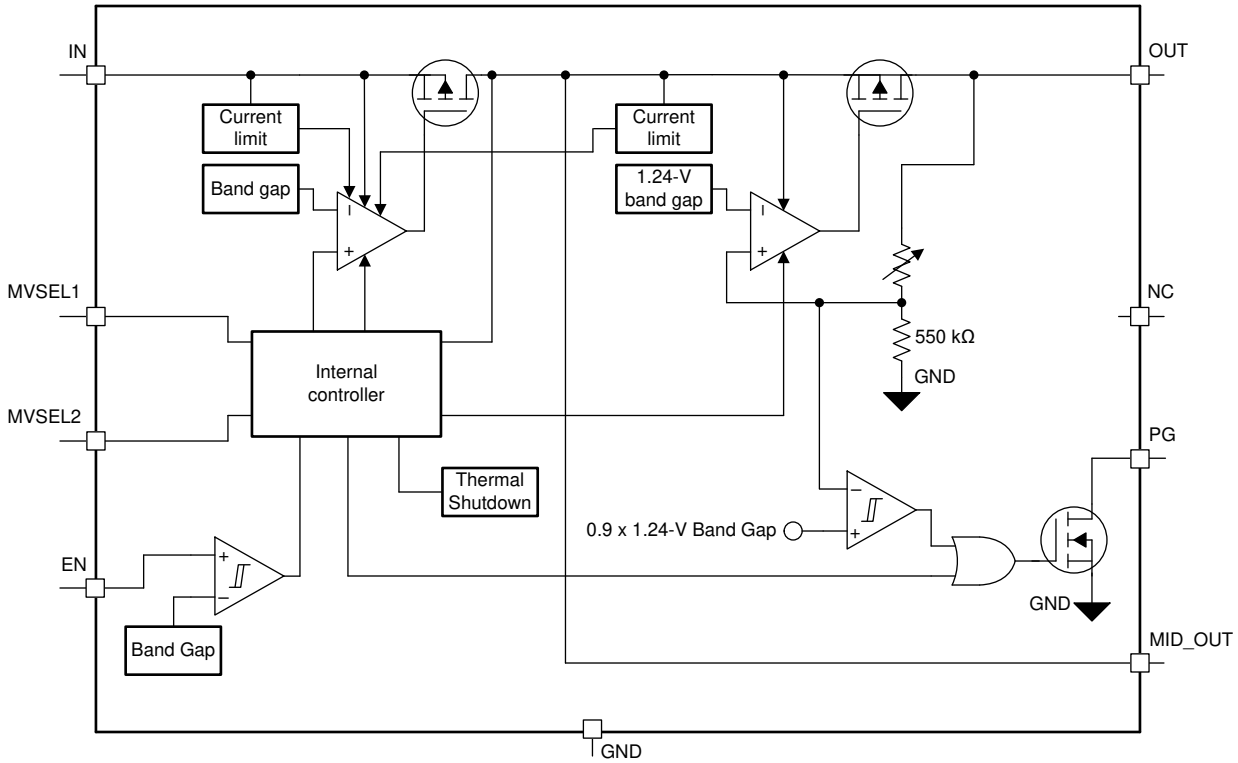

Figure 7-2. Fixed Version

7.3 Feature Description

7.3.1 MID_OUT Voltage Selection

The TPS7A43 features a MID_OUT voltage pin that provides a secondary output voltage supply in addition to the OUT pin, which is the main output voltage supply. The MID_OUT voltage can be set using the MVSEL1 and MVSEL2 pins; see the *MID_OUT Voltage Setting* section for more details.

7.3.2 Precision Enable

The TPS7A43 features a precision enable circuit. The enable pin (EN) is active high; thus, enable the device by forcing the voltage of the enable pin to exceed the $V_{EN(HI)}$ voltage; see the *Electrical Characteristics* table. Turn off the device by forcing the voltage of the enable pin to drop below the $V_{EN(LOW)}$ voltage; see the *Electrical Characteristics* table. EN is pulled high by a 50-nA current source; therefore, EN can be left floating to enable the device. Board-level leakage on the order of tens of nanoamperes can cause the EN pin to be pulled low when EN is left floating, so care must be taken to minimize leakage if this functionality is used.

If this pin is tied to the IN pin, the input voltage must not exceed 18 V; see the *Recommended Operating Conditions* table.

Copyright © 2022 Texas Instruments Incorporated

As shown in Figure 7-3, an external resistor divider circuit can be used to enable the device using the input voltage.

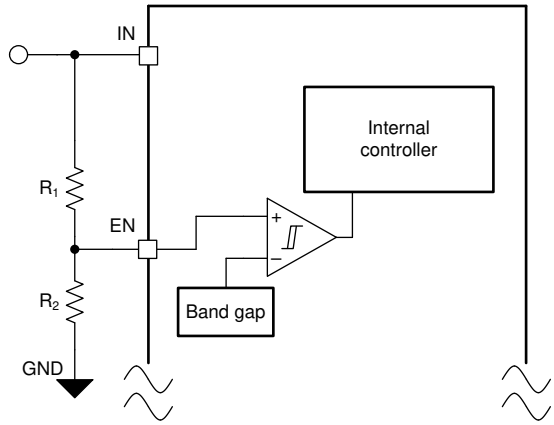

Figure 7-3. Enable the Device Using the Input Voltage

The $V_{EN(HI)}$ (maximum) and $V_{EN(LOW)}$ (minimum) thresholds along with the application input voltage can be used to set the R_1 to R_2 resistor divider ratio. The values of the R_2 and R_1 resistors can also be optimized to minimize the leakage current through the divider.

7.3.3 Dropout Voltage

Dropout voltage (V_{DO}) is defined as the input voltage minus the output voltage ($V_{IN} – V_{OUT}$) at the rated output current (I_{RATED}), where the pass transistor is fully on. I_{RATED} is the maximum I_{OUT} listed in the *Recommended Operating Conditions* table. The pass transistor is in the ohmic or triode region of operation, and acts as a switch. The dropout voltage indirectly specifies a minimum input voltage greater than the nominal programmed output voltage at which the output voltage is expected to stay in regulation. If the input voltage falls to less than the nominal output regulation, then the output voltage falls as well.

For a CMOS regulator, the dropout voltage is determined by the drain-source on-state resistance ($R_{DS(ON)}$) of the pass transistor. Therefore, if the linear regulator operates at less than the rated current, the dropout voltage for that current scales accordingly. The following equation calculates the $R_{DS(ON)}$ of the device.

$$R_{DS(ON)} = \frac{V_{DO}}{I_{RATED}} \tag{1}$$

7.3.4 Current Limit

The device has internal current limit circuits for both MID_OUT and OUT rails. These circuits protect the regulator during high-current load transient faults or shorting events on either rails. Both current limit circuits are brick-wall schemes with $I_{CL(MID_OUT)}$ being higher than $I_{CL(OUT)}$. In a high-current load transient fault, the brick-wall scheme limits the output current to the respective current limit ($I_{CL(MID_OUT)}$ or $I_{CL(OUT)}$), both of which are listed in the *Electrical Characteristics* table.

When the device is in either current limit, the output voltages are not regulated. When a current limit event occurs, the device begins to heat up because of the increase in power dissipation. When the device is in either current limit, the corresponding pass transistor dissipates power. For instance, when the OUT rail is in current limit, the power dissipation can be calculated as [($V_{IN} – V_{OUT}$) × $I_{CL(OUT)}$]. If thermal shutdown is triggered, the device turns off. After the device cools down, the internal thermal shutdown circuit turns the device back on. If the faulty output current condition continues, the device cycles between current limit and thermal shutdown with approximately a 5-ms time constant. For more information on current limits, see the *Know Your Limits* application note.

Figure 7-4 shows a diagram of the current limit.

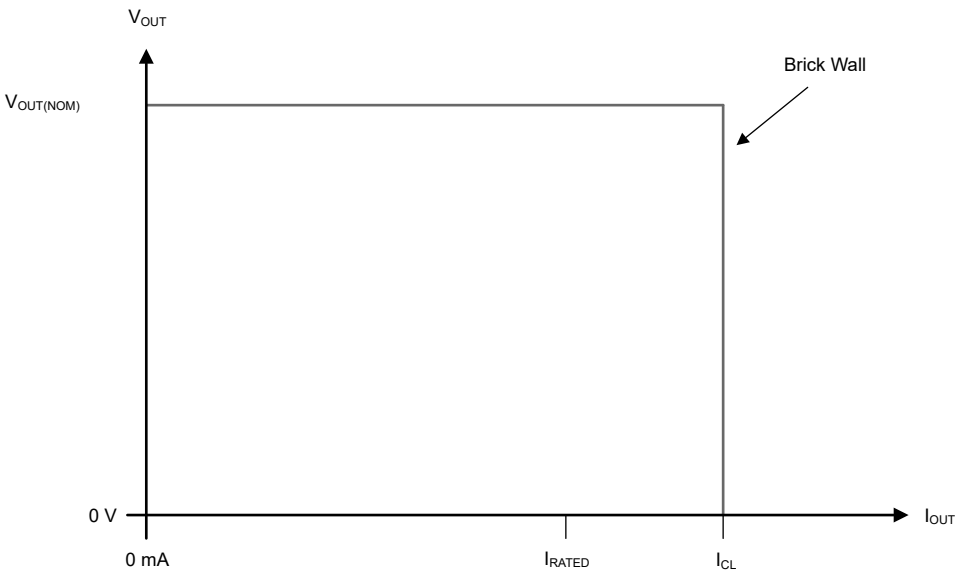

Figure 7-4. Current Limit: Brick-Wall Scheme

7.3.5 Thermal Shutdown

The device contains a thermal shutdown protection circuit to disable the device when the junction temperature (T_J) of the pass transistor rises to $T_{SD(shutdown)}$ (typical). Thermal shutdown hysteresis assures that the device resets (turns on) when the temperature falls to $T_{SD(reset)}$ (typical).

The thermal time-constant of the semiconductor die is fairly short, thus the device can cycle on and off when thermal shutdown is reached until power dissipation is reduced. Power dissipation during start up can be high from large $V_{IN} – V_{OUT}$ voltage drops across the device or from high inrush currents charging large output capacitors. Under some conditions, the thermal shutdown protection disables the device before start up completes.

When the thermal limit is triggered with the load current near the value of the current limit, the output can oscillate prior to the output switching off.

For reliable operation, limit the junction temperature to the maximum listed in the *Recommended Operating Conditions* table. Operation above this maximum temperature causes the device to exceed operational specifications. Although the internal protection circuitry of the device is designed to protect against thermal overload conditions, this circuitry is not intended to replace proper heat sinking. Continuously running the device into thermal shutdown or above the maximum recommended junction temperature reduces long-term reliability.

Copyright © 2022 Texas Instruments Incorporated

7.3.6 Power Good

The power-good (PG) pin is an open-drain output and can be connected to a regulated supply through an external pullup resistor. The maximum pullup voltage is listed as V_{PG} in the *Recommended Operating Conditions* table. For the PG pin to have a valid output, the voltage on the IN pin must be greater than 4 V. When V_{OUT} exceeds $V_{IT(PG,RISING)}$, the PG output is high impedance and the PG pin voltage pulls up to the connected regulated supply. When the regulated output falls below $V_{IT(PG,FALLING)}$, the open-drain output turns on and pulls the PG output low after a short deglitch time. If output voltage monitoring is not needed, the PG pin can be left floating or connected to ground.

The recommended maximum PG pin sink current ($I_{PG\text{-}SINK}$) and the leakage current into the PG pin ($I_{LKG(PG)}$) are listed in the *Electrical Characteristics* table.

The PG pullup voltage (V_{PG_PULLUP}), the desired minimum power-good output voltage ($V_{PG(MIN)}$), and $I_{LKG(PG)}$ limit the maximum PG pin pullup resistor value (R_{PG_PULLUP}). V_{PG_PULLUP}, the PG pin low-level output voltage ($V_{OL(PG)}$), and $I_{PG\text{-}SINK}$ limit the minimum R_{PG_PULLUP}. Maximum and minimum values for R_{PG_PULLUP} can be calculated from the following equations:

$$R_{PG_PULLUP(MAX)} = (V_{PG_PULLUP} - V_{PG(MIN)}) / I_{LKG(PG)_MAX} \quad (2)$$

$$R_{PG_PULLUP(MIN)} = (V_{PG_PULLUP} - V_{OL(PG)}) / I_{PG\text{-}SINK} \quad (3)$$

For example, if the PG pin is connected to a pullup resistor with a 3.3-V external supply, from the *Electrical Characteristics* table, $R_{PG_PULLUP(MAX)}$ is 25 MΩ. From the *Electrical Characteristics* table, $R_{PG_PULLUP(MIN)}$ is 6.6 kΩ.

7.4 Device Functional Modes

7.4.1 Device Functional Mode Comparison

Table 7-1 shows the conditions that lead to the different modes of operation. See the *Electrical Characteristics* table for parameter values.

Table 7-1. Device Functional Mode Comparison

OPERATING MODE	PARAMETER				
	V_{IN}	V_{EN}	I_{MID_OUT}	I_{OUT}	T_J
Normal operation	$V_{IN} > V_{OUT(nom)} + V_{DO}$ and $V_{IN} > V_{IN(min)}$	$V_{EN} > V_{EN(HI)}$	$I_{MID_OUT} < I_{MID_OUT(max)}$	$I_{OUT} < I_{OUT(max)}$	$T_J < T_{SD(shutdown)}$
Dropout operation on MID_OUT	$V_{IN(min)} < V_{IN} < V_{MID_OUT(nom)} + V_{DO(MID_OUT)}$	$V_{EN} > V_{EN(HI)}$	$I_{MID_OUT} < I_{MID_OUT(max)}$	$I_{OUT} < I_{OUT(max)}$	$T_J < T_{SD(shutdown)}$
Dropout operation on OUT	$V_{IN(min)} < V_{IN} < V_{OUT(nom)} + V_{DO(OUT)}$	$V_{EN} > V_{EN(HI)}$	$I_{MID_OUT} < I_{MID_OUT(max)}$	$I_{OUT} < I_{OUT(max)}$	$T_J < T_{SD(shutdown)}$
Disabled (any true condition disables the device)	$V_{IN} < 4$ V	$V_{EN} < V_{EN(LOW)}$	Not applicable	Not applicable	$T_J > T_{SD(reset)}$

7.4.2 Normal Operation

The device regulates to the nominal output voltages when the following conditions are met:

- The input voltage is greater than the nominal output voltage plus the dropout voltage on either rails ($V_{MID_OUT(nom)} + V_{DO(MID_OUT)}$ and $V_{OUT(nom)} + V_{DO(OUT)}$)
- The current sourced from either MID_OUT and OUT is less than the respective current limit specified in the *Electrical Characteristics* table for each rail
- The device junction temperature is less than the thermal shutdown temperature ($T_J < T_{SD(shutdown)}$)
- The enable voltage has previously exceeded the $V_{EN(HI)}$ (maximum) threshold and has not yet decreased to less than the $V_{EN(LOW)}$ minimum threshold
- V_{IN} has exceeded 4 V if the EN pin is left floating

7.4.3 Dropout Operation

Because the TPS7A43 has two output rails (MID_OUT and OUT), the device can be in either $V_{DO(MID_OUT)}$ or $V_{DO(OUT)}$, or in both depending on the input voltage level while all other conditions are met for normal operation. When the input voltage drops to lower than $V_{MID_OUT(nom)} + V_{DO(MID_OUT)}$, the device is in $V_{DO(MID_OUT)}$ dropout. During this rail dropout, V_{MID_OUT} tracks V_{IN} and the transient performance of V_{MID_OUT} becomes significantly degraded because the pass transistor is in the ohmic or triode region, and acts as a switch. The MID_OUT rail line or load transients in the $V_{DO(MID_OUT)}$ dropout can result in large V_{MID_OUT} deviations. When the device is still in $V_{DO(MID_OUT)}$ and when V_{IN} is higher than $V_{OUT(nom)} + V_{DO(OUT)}$, V_{OUT} is in regulation and is not in $V_{DO(OUT)}$ dropout. When V_{IN} drops below $V_{OUT(nom)} + V_{DO(OUT)}$, V_{OUT} is no longer in regulation and transient performance becomes significantly degraded.

When the device is in a steady dropout state (when the device is in both $V_{DO(MID_OUT)}$ and $V_{DO(OUT)}$ dropout, directly after being in a normal regulation state, but *not* during start up), the pass transistor is driven into the ohmic or triode region. When the input voltage returns to a value greater than or equal to $V_{MID_OUT(nom)} + V_{DO(MID_OUT)}$ and greater than $V_{OUT(NOM)} + V_{DO}$, the output voltage (OUT) can overshoot for a short period of time while the device pulls the pass transistor back into the linear region.

7.4.4 Disabled

The outputs of the device can be shutdown by forcing the voltage of the enable pin to less than $V_{EN(LOW)}$ (minimum); see the *Electrical Characteristics* table. When disabled, the pass transistor is turned off and internal circuits are shutdown.

Copyright © 2022 Texas Instruments Incorporated

8 Application and Implementation

Note

Information in the following applications sections is not part of the TI component specification, and TI does not warrant its accuracy or completeness. TI's customers are responsible for determining suitability of components for their purposes, as well as validating and testing their design implementation to confirm system functionality.

8.1 Application Information

8.1.1 MID_OUT Voltage Setting

The MID_OUT voltage has three different output voltage levels (10 V, 12 V, and 15 V), as listed in Table 8-1, depending on the MVSEL1 and MVSEL2 pin voltage settings.

Table 8-1. MID_OUT Voltage Setting

SET V_{MVSEL1}	SET V_{MVSEL2}	MID_OUT
$V_{MVSEL1} \le V_{MVSEL1(LOW)}$	$V_{MVSEL2} \le V_{MVSEL2(LOW)}$	15 V
$V_{MVSEL1} \le V_{MVSEL1(LOW)}$	$V_{MVSEL2} \ge V_{MVSEL2(HIGH)}$	12 V
$V_{MVSEL1} \ge V_{MVSEL1(HIGH)}$	$V_{MVSEL2} \le V_{MVSEL2(LOW)}$	10 V
$V_{MVSEL1} \ge V_{MVSEL1(HIGH)}$	$V_{MVSEL2} \ge V_{MVSEL2(HIGH)}$	12 V

For adjustable voltage options of the TPS7A43, and to maintain voltage regulation on the MID_OUT and OUT pins, the input voltage must be kept ≥ MID_OUT + $V_{DO(MID_OUT)}$. Additionally, to maintain regulation on the OUT pin, the MID_OUT voltage must be set ≥ $V_{OUT(nom)}$ + $V_{DO(OUT)}$.

Set the MVSEL1 and MVSEL2 voltages before enabling the device to set the MID_OUT voltage level; however, the MID_OUT voltage setting can be changed to a different level after the device had powered up. Do not allow these pins to float, instead tie them both to GND if not used to set V_{MID_OUT}. When the device is powered while either of these pins are floating, the MID_OUT voltage is not set properly and might switch levels and cause damage to the device.

8.1.2 Adjustable Device Feedback Resistors

The adjustable-version device requires external feedback divider resistors to set the output voltage. V_{OUT} is set using the feedback divider resistors, R_1 and R_2, according to the following equation:

$$V_{OUT} = V_{FB} \times (1 + R_1 / R_2) \quad (4)$$

To ignore the FB pin current error term in the V_{OUT} equation, set the feedback divider current to 100 times the FB pin current listed in the *Electrical Characteristics* table. This setting provides the maximum feedback divider series resistance, as shown in the following equation:

$$R_1 + R_2 \le V_{OUT} / (I_{FB} \times 100) \quad (5)$$

8.1.3 Recommended Capacitor Types

The device is designed to be stable using low equivalent series resistance (ESR) capacitors at the input and output. Multilayer ceramic capacitors have become the industry standard for these types of applications and are recommended, but must be used with good judgment. Ceramic capacitors that employ X7R-, X5R-, and C0G-rated dielectric materials provide relatively good capacitive stability across temperature, whereas the use of Y5V-rated capacitors is discouraged because of large variations in capacitance.

Regardless of the ceramic capacitor type selected, the effective capacitance varies with operating voltage and temperature. As a rule of thumb, expect the effective capacitance to decrease by as much as 50%. The input and output capacitors recommended in the *Recommended Operating Conditions* table account for an effective capacitance of approximately 50% of the nominal value.

Copyright © 2022 Texas Instruments Incorporated

8.1.4 Input and Output Capacitor Requirements

An input capacitor is not required for stability except when the device maximum current is sourced from the MID_OUT pin. However, adding an input capacitor is always good analog design practice to counteract reactive input sources and improve transient response, input ripple, and PSRR. Starting with the nominal input capacitor value is required if large, fast transient load or line transients are anticipated on the MID_OUT pin or if the device is located several inches from the input power source.

A minimum of a 3:1 capacitor ratio between C_{MID_OUT} and C_{OUT} is required for proper operation of the TPS7A43 LDO and a 4.7-µF capacitor can be connected from the MID_OUT pin to GND.

A minimum 1-µF output capacitor is required for V_{OUT} stability. A maximum 100-µF output capacitor can be used as long as the 3:1 ratio between C_{MID_OUT} and C_{OUT} is maintained.

8.1.5 Power Dissipation (P_D)

Circuit reliability requires consideration of the device power dissipation, location of the circuit on the printed circuit board (PCB), and correct sizing of the thermal plane. The PCB area around the regulator must have few or no other heat-generating devices that cause added thermal stress.

To first-order approximation, power dissipation in the regulator depends on the input-to-output voltage difference and load conditions. The following equation calculates power dissipation (P_D).

$$P_D = (V_{IN} - V_{OUT}) \times I_{OUT} \tag{6}$$

Note

Power dissipation can be minimized, and therefore greater efficiency can be achieved, by correct selection of the system voltage rails. For the lowest power dissipation use the minimum input voltage required for correct output regulation.

For devices with a thermal pad, the primary heat conduction path for the device package is through the thermal pad to the PCB. Solder the thermal pad to a copper pad area under the device. This pad area must contain an array of plated vias that conduct heat to additional copper planes for increased heat dissipation.

The maximum power dissipation determines the maximum allowable ambient temperature (T_A) for the device. According to the following equation, power dissipation and junction temperature are most often related by the junction-to-ambient thermal resistance ($R_{\theta JA}$) of the combined PCB and device package and the temperature of the ambient air (T_A).

$$T_J = T_A + (R_{\theta JA} \times P_D) \tag{7}$$

Thermal resistance ($R_{\theta JA}$) is highly dependent on the heat-spreading capability built into the particular PCB design, and therefore varies according to the total copper area, copper weight, and location of the planes. The junction-to-ambient thermal resistance listed in the *Thermal Information* table is determined by the JEDEC standard PCB and copper-spreading area, and is used as a relative measure of package thermal performance.

8.1.6 Estimating Junction Temperature

The JEDEC standard now recommends the use of psi (Ψ) thermal metrics to estimate the junction temperatures of the linear regulator when in-circuit on a typical PCB board application. These metrics are not thermal resistance parameters and instead offer a practical and relative way to estimate junction temperature. These psi metrics are determined to be significantly independent of the copper area available for heat-spreading. The *Thermal Information* table lists the primary thermal metrics, which are the junction-to-top characterization parameter (ψ_{JT}) and junction-to-board characterization parameter (ψ_{JB}). As described in Equation 8 and Equation 9, these parameters provide two methods for calculating the junction temperature (T_J). Use the junction-to-top characterization parameter (ψ_{JT}) with the temperature at the center-top of device package (T_T) to calculate the junction temperature. Use the junction-to-board characterization parameter (ψ_{JB}) with the PCB surface temperature 1 mm from the device package (T_B) to calculate the junction temperature.

Copyright © 2022 Texas Instruments Incorporated

$$T_J = T_T + \psi_{JT} \times P_D \quad (8)$$

where:

- P_D is the dissipated power
- T_T is the temperature at the center-top of the device package

$$T_J = T_B + \psi_{JB} \times P_D \quad (9)$$

where:

- T_B is the PCB surface temperature measured 1 mm from the device package and centered on the package edge

For detailed information on the thermal metrics and how to use them, see the *Semiconductor and IC Package Thermal Metrics* application note.

8.2 Typical Application

This section discusses the implementation of the TPS7A43 in a cordless power tools application. Figure 8-1 shows a typical circuit diagram for this application.

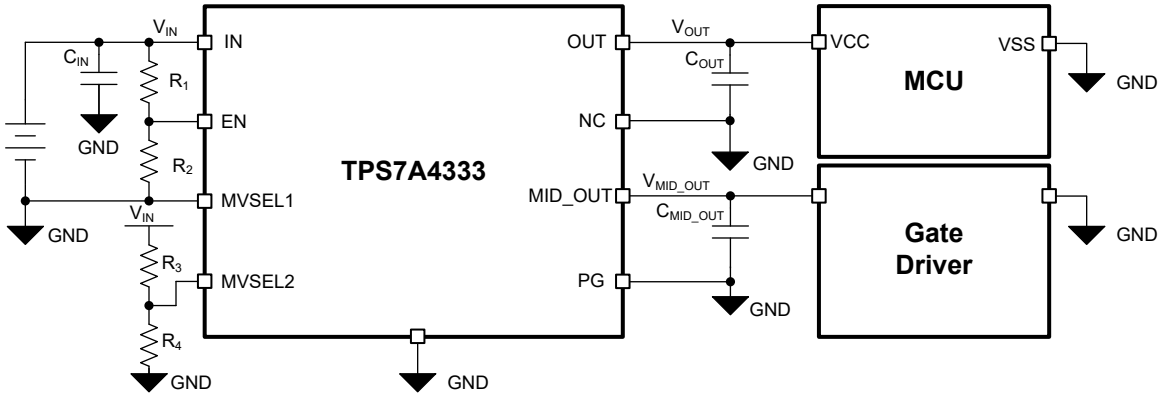

Figure 8-1. Powering Cordless Power Tools

8.2.1 Design Requirements

Table 8-2 summarizes the design requirements for Figure 8-1.

Table 8-2. Design Parameters

PARAMETER	DESIGN VALUES
V_{IN}	15 V (min), 85 V (transient max)
V_{OUT}	3.3 V ± 2%
V_{MVSEL1}	0 V
V_{MVSEL2}	≥ 0.9 V
V_{MID_OUT}	12 V ± 5%
$I_{(IN)}$ (no load)	< 9 µA
I_{OUT} (typical), (max)	20 mA, 50 mA
I_{MID_OUT} (typical), (max)	0 mA, 1 mA
T_A	60°C (max)

8.2.2 Detailed Design Procedure

A fixed 3.3-V output voltage device is used for this application. The MID_OUT voltage is set to 12 V by tying the V_{MVSEL1} pin to GND and setting V_{MVSEL2} to ≥ 0.9 V using the R3 and R4 resistor divider. The value of the R3 and R4 divider ratio must ensure that V_{MVSEL2} is set to ≥ 0.9 V when V_{IN} ≥ 15 V. To limit the current burned through this divider to 5 µA, R3 can be calculated using Equation 10, and the calculated value then can be rounded to the nearest standard value. When V_{IN} goes all the way up to 85 V during a transient, the V_{MSEL2} voltage goes up to 3.9 V (which is still lower than the maximum recommended value for this pin, as specified in the *Recommended Operating Conditions* table).

$$R3 = (15\ V – 0.9\ V) / 5\ \mu A = 2.82\ M\Omega \tag{10}$$

R4 then can be calculated with Equation 11 by using the VMVSEL2 value of the same current value.

$$R3 = 0.9\ V / 5\ \mu A = 180\ k\Omega \tag{11}$$

The enable precision circuit is also used to turn off the device when V_{IN} drops below 15 V. The R1 and R2 resistor divider is used to set V_{EN} to lower than $V_{EN(LOW)}$ of 1.15 V when V_{IN} drops below 15 V. R1 can be calculated using Equation 12 to limit the burned current through this divider to 5 µA, similar to the above divider.

$$R1 = (15\ V – 1.15\ V) / 5\ \mu A = 2.77\ M\Omega \tag{12}$$

Equation 13 can then be used to calculate R2. The calculated R1 and R2 values can then rounded to the nearest standard values.

$$R2 = 1.15\ V / 5\ \mu A = 230\ k\Omega \tag{13}$$

8.2.3 Application Curves

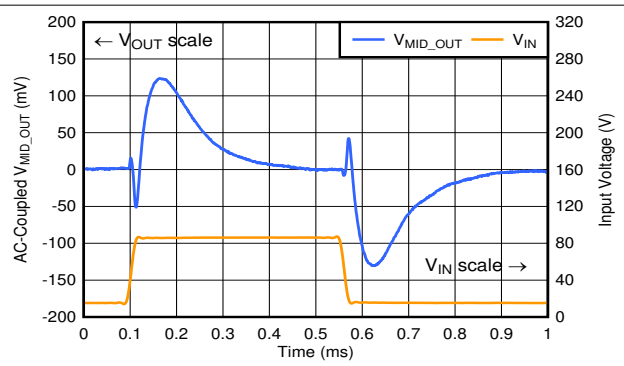

V_{IN} = 15 V to 85 V, V_{IN} ramp rate = 10 V/µs, V_{MVSEL1} = 0 V, V_{MVSEL2} = 0.9 V, I_{OUT} = 50 mA, I_{MID_OUT} = open

Figure 8-2. TPS7A43 Line Transient: 15 V to 85 V

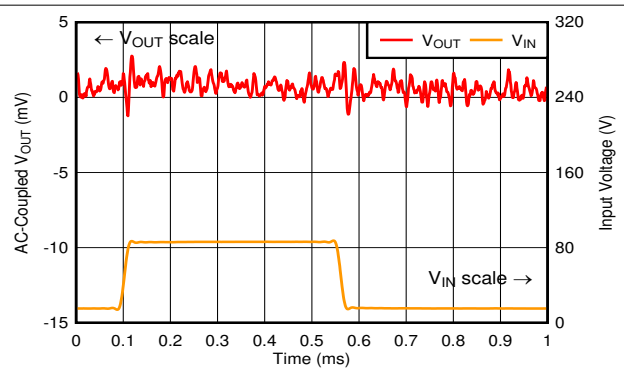

V_{IN} = 15 V to 85 V, V_{IN} ramp rate = 10 V/µs, V_{MVSEL1} = 0 V, V_{MVSEL2} = 0.9 V, I_{OUT} = 50 mA, I_{MID_OUT} = open

Figure 8-3. TPS7A43 Line Transient: 15 V to 85 V (Zoom on V_{OUT})

Copyright © 2022 Texas Instruments Incorporated

8.3 Power Supply Recommendations

The device is designed to operate from an input supply voltage range of 4 V to 85 V. To ensure that the output voltages are well regulated and dynamic performance is optimum, the input supply must be at least $V_{MID_OUT(nom)}$ + 1.5 V. Connect a low output impedance power supply directly to the input pin of the TPS7A43.

8.4 Layout

8.4.1 Layout Guidelines

- Place input and output capacitors as close to the device pins as possible.
- Use copper planes for device connections to optimize thermal performance.
- Place thermal vias around the device and under the thermal pad to distribute heat.
- Only place tented thermal vias directly beneath the thermal pad of the DGQ package. An untented via can wick solder or solder paste away from the thermal pad joint during the soldering process, leading to a compromised solder joint on the thermal pad.

Copyright © 2022 Texas Instruments Incorporated

8.4.2 Layout Examples

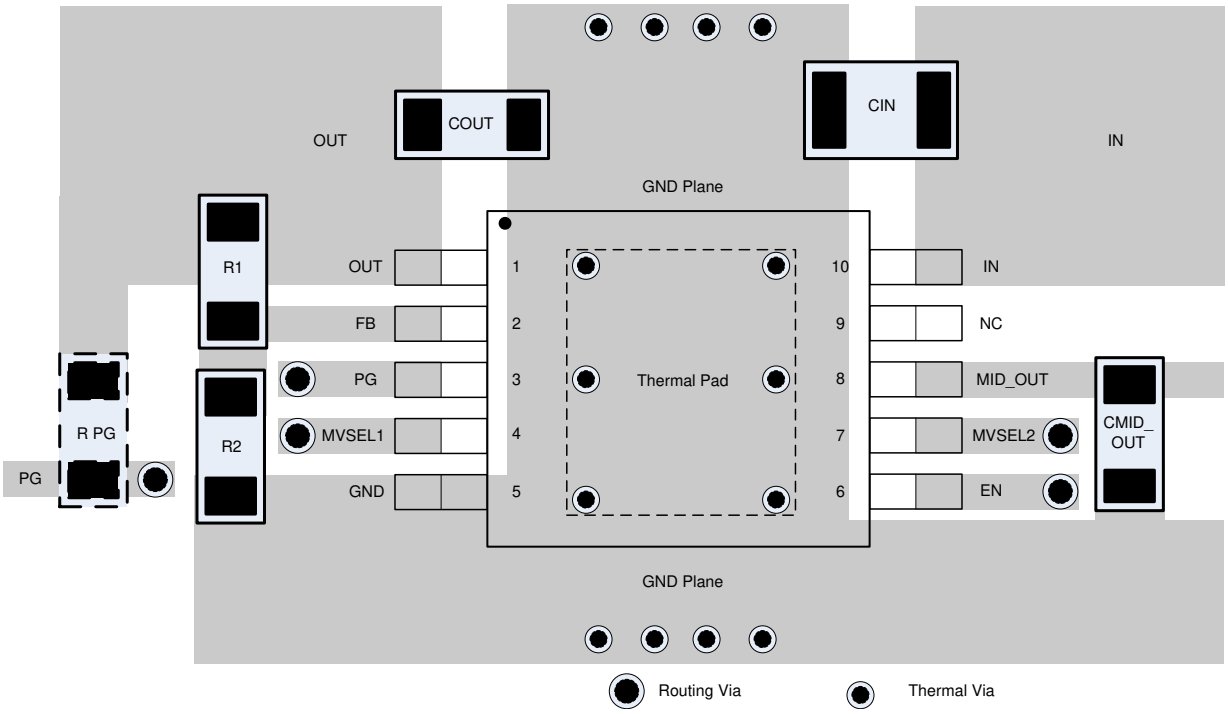

Figure 8-4. Adjustable Version Layout Example

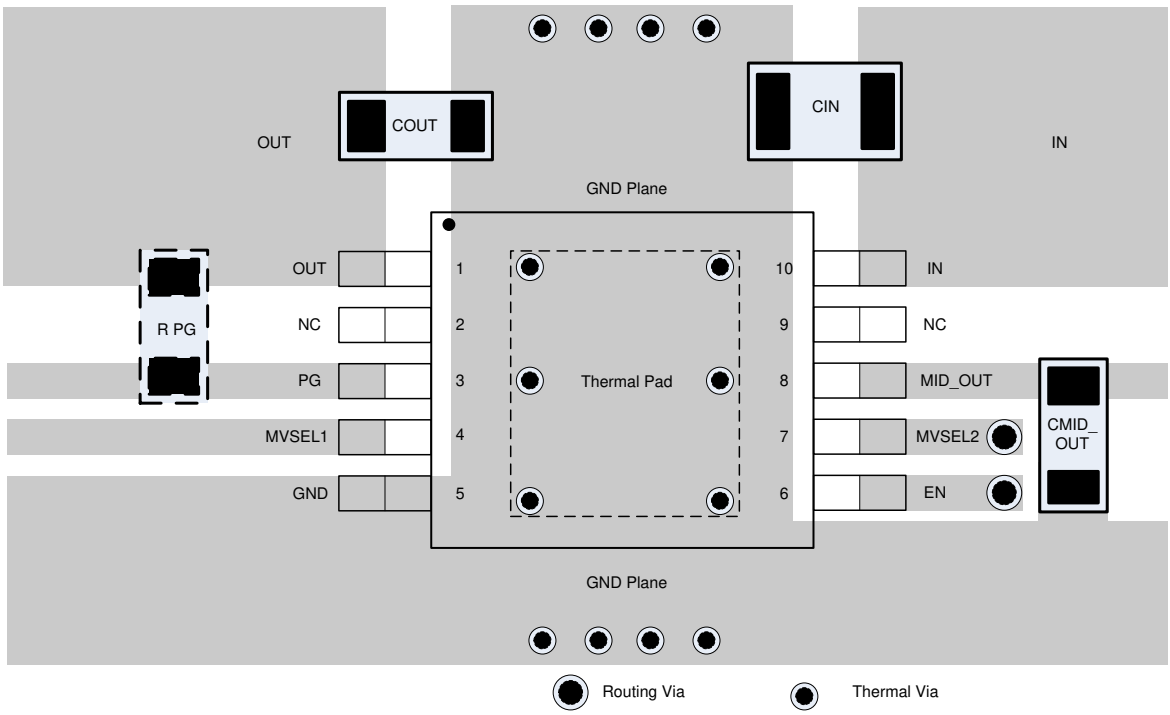

Figure 8-5. Fixed Version Layout Example

Copyright © 2022 Texas Instruments Incorporated

9 Device and Documentation Support

9.1 Device Support

9.1.1 Development Support

9.1.1.1 Evaluation Modules

An evaluation module (EVM) for a similar P2P device, the TPS7A43, is available to assist in the initial circuit performance evaluation for the TPS7A43. The *TPS7A43EVM-047 Evaluation Module* user guide can be requested at the Texas Instruments website through the product folders or purchased directly from the TI Store.

9.1.1.2 Spice Models

SPICE models for the TPS7A43 are available through the product folder under *Tools & software*.

9.1.2 Device Nomenclature

Table 9-1. Device Nomenclature(1)

PRODUCT	V_{OUT}
TPS7A43 **xx(x)yyyz**	**xx(x)** is the nominal output voltage. For output voltages with a resolution of 100 mV, two digits are used in the ordering number; for output voltages with a resolution of 50 mV, three digits are used (for example, 28 = 2.8 V; 125 = 1.25 V). 01 indicates adjustable output version. **yyy** is the package designator. **z** is the package quantity. R is for large quantity reel, T is for small quantity reel.

(1) For the most current package and ordering information see the Package Option Addendum at the end of this document, or visit the device product folder at www.ti.com.

9.2 Documentation Support

9.2.1 Related Documentation

For related documentation see the following:

- Texas Instruments, *TPS7A43EVM-047 Evaluation Module* user guide
- Texas Instruments, *LDO Basics: Preventing reverse current* blog
- Texas Instruments, *LDO basics: capacitor vs. capacitance* blog

9.3 Receiving Notification of Documentation Updates

To receive notification of documentation updates, navigate to the device product folder on ti.com. Click on *Subscribe to updates* to register and receive a weekly digest of any product information that has changed. For change details, review the revision history included in any revised document.

9.4 Support Resources

TI E2E™ support forums are an engineer's go-to source for fast, verified answers and design help — straight from the experts. Search existing answers or ask your own question to get the quick design help you need.

Linked content is provided "AS IS" by the respective contributors. They do not constitute TI specifications and do not necessarily reflect TI's views; see TI's Terms of Use.

9.5 Trademarks

TI E2E™ is a trademark of Texas Instruments.
All trademarks are the property of their respective owners.

9.6 Electrostatic Discharge Caution

This integrated circuit can be damaged by ESD. Texas Instruments recommends that all integrated circuits be handled with appropriate precautions. Failure to observe proper handling and installation procedures can cause damage.

ESD damage can range from subtle performance degradation to complete device failure. Precision integrated circuits may be more susceptible to damage because very small parametric changes could cause the device not to meet its published specifications.

9.7 Glossary

TI Glossary This glossary lists and explains terms, acronyms, and definitions.

10 Mechanical, Packaging, and Orderable Information

The following pages include mechanical, packaging, and orderable information. This information is the most current data available for the designated devices. This data is subject to change without notice and revision of this document. For browser-based versions of this data sheet, refer to the left-hand navigation.

Copyright © 2022 Texas Instruments Incorporated

PACKAGING INFORMATION

Orderable part number	Status (1)	Material type (2)	Package | Pins	Package qty | Carrier	RoHS (3)	Lead finish/ Ball material (4)	MSL rating/ Peak reflow (5)	Op temp (°C)	Part marking (6)
TPS7A4301DGQR	Active	Production	HVSSOP (DGQ) | 10	2500 | LARGE T&R	Yes	NIPDAUAG	Level-2-260C-1 YEAR	-40 to 125	4301
TPS7A4301DGQR.A	Active	Production	HVSSOP (DGQ) | 10	2500 | LARGE T&R	Yes	NIPDAUAG	Level-2-260C-1 YEAR	-40 to 125	4301
TPS7A4333DGQR	Active	Production	HVSSOP (DGQ) | 10	2500 | LARGE T&R	Yes	NIPDAUAG	Level-2-260C-1 YEAR	-40 to 125	4333
TPS7A4333DGQR.A	Active	Production	HVSSOP (DGQ) | 10	2500 | LARGE T&R	Yes	NIPDAUAG	Level-2-260C-1 YEAR	-40 to 125	4333
TPS7A4350DGQR	Active	Production	HVSSOP (DGQ) | 10	2500 | LARGE T&R	Yes	NIPDAUAG	Level-2-260C-1 YEAR	-40 to 125	4350
TPS7A4350DGQR.A	Active	Production	HVSSOP (DGQ) | 10	2500 | LARGE T&R	Yes	NIPDAUAG	Level-2-260C-1 YEAR	-40 to 125	4350

(1) **Status:** For more details on status, see our product life cycle.

(2) **Material type:** When designated, preproduction parts are prototypes/experimental devices, and are not yet approved or released for full production. Testing and final process, including without limitation quality assurance, reliability performance testing, and/or process qualification, may not yet be complete, and this item is subject to further changes or possible discontinuation. If available for ordering, purchases will be subject to an additional waiver at checkout, and are intended for early internal evaluation purposes only. These items are sold without warranties of any kind.

(3) **RoHS values:** Yes, No, RoHS Exempt. See the TI RoHS Statement for additional information and value definition.

(4) **Lead finish/Ball material:** Parts may have multiple material finish options. Finish options are separated by a vertical ruled line. Lead finish/Ball material values may wrap to two lines if the finish value exceeds the maximum column width.

(5) **MSL rating/Peak reflow:** The moisture sensitivity level ratings and peak solder (reflow) temperatures. In the event that a part has multiple moisture sensitivity ratings, only the lowest level per JEDEC standards is shown. Refer to the shipping label for the actual reflow temperature that will be used to mount the part to the printed circuit board.

(6) **Part marking:** There may be an additional marking, which relates to the logo, the lot trace code information, or the environmental category of the part.

Multiple part markings will be inside parentheses. Only one part marking contained in parentheses and separated by a "~" will appear on a part. If a line is indented then it is a continuation of the previous line and the two combined represent the entire part marking for that device.

Important Information and Disclaimer: The information provided on this page represents TI's knowledge and belief as of the date that it is provided. TI bases its knowledge and belief on information provided by third parties, and makes no representation or warranty as to the accuracy of such information. Efforts are underway to better integrate information from third parties. TI has taken and continues to take reasonable steps to provide representative and accurate information but may not have conducted destructive testing or chemical analysis on incoming materials and chemicals. TI and TI suppliers consider certain information to be proprietary, and thus CAS numbers and other limited information may not be available for release.

In no event shall TI's liability arising out of such information exceed the total purchase price of the TI part(s) at issue in this document sold by TI to Customer on an annual basis.

TAPE AND REEL INFORMATION

REEL DIMENSIONS

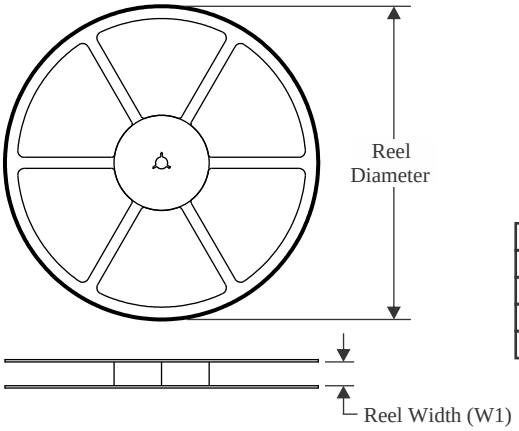

TAPE DIMENSIONS

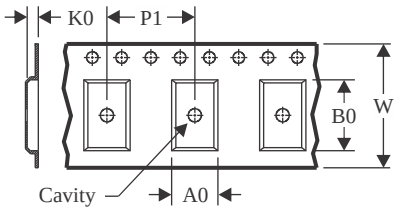

A0	Dimension designed to accommodate the component width
B0	Dimension designed to accommodate the component length
K0	Dimension designed to accommodate the component thickness
W	Overall width of the carrier tape
P1	Pitch between successive cavity centers

QUADRANT ASSIGNMENTS FOR PIN 1 ORIENTATION IN TAPE

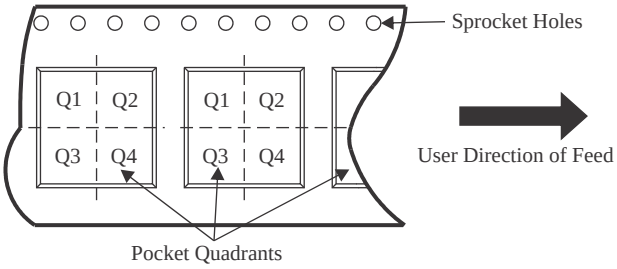

*All dimensions are nominal

Device	Package Type	Package Drawing	Pins	SPQ	Reel Diameter (mm)	Reel Width W1 (mm)	A0 (mm)	B0 (mm)	K0 (mm)	P1 (mm)	W (mm)	Pin1 Quadrant
TPS7A4301DGQR	HVSSOP	DGQ	10	2500	330.0	12.4	5.3	3.4	1.4	8.0	12.0	Q1
TPS7A4333DGQR	HVSSOP	DGQ	10	2500	330.0	12.4	5.3	3.4	1.4	8.0	12.0	Q1
TPS7A4350DGQR	HVSSOP	DGQ	10	2500	330.0	12.4	5.3	3.4	1.4	8.0	12.0	Q1

TAPE AND REEL BOX DIMENSIONS

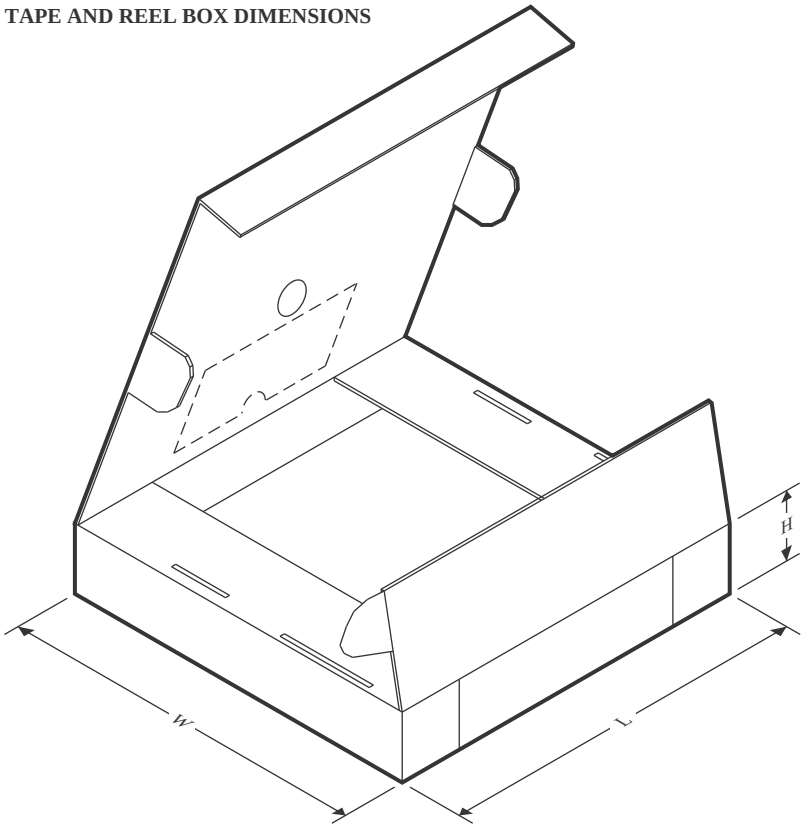

*All dimensions are nominal

Device	Package Type	Package Drawing	Pins	SPQ	Length (mm)	Width (mm)	Height (mm)
TPS7A4301DGQR	HVSSOP	DGQ	10	2500	366.0	364.0	50.0
TPS7A4333DGQR	HVSSOP	DGQ	10	2500	366.0	364.0	50.0
TPS7A4350DGQR	HVSSOP	DGQ	10	2500	366.0	364.0	50.0

GENERIC PACKAGE VIEW

DGQ 10

PowerPAD™ HVSSOP - 1.1 mm max height

3 x 3, 0.5 mm pitch

PLASTIC SMALL OUTLINE

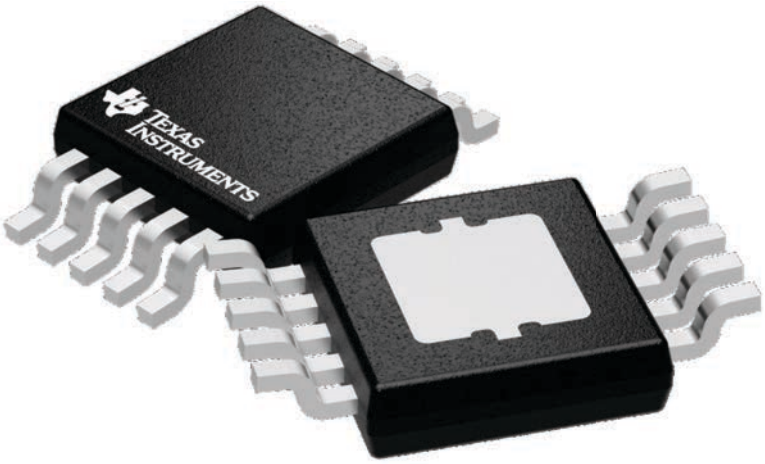

Images above are just a representation of the package family, actual package may vary.
Refer to the product data sheet for package details.

4224775/A

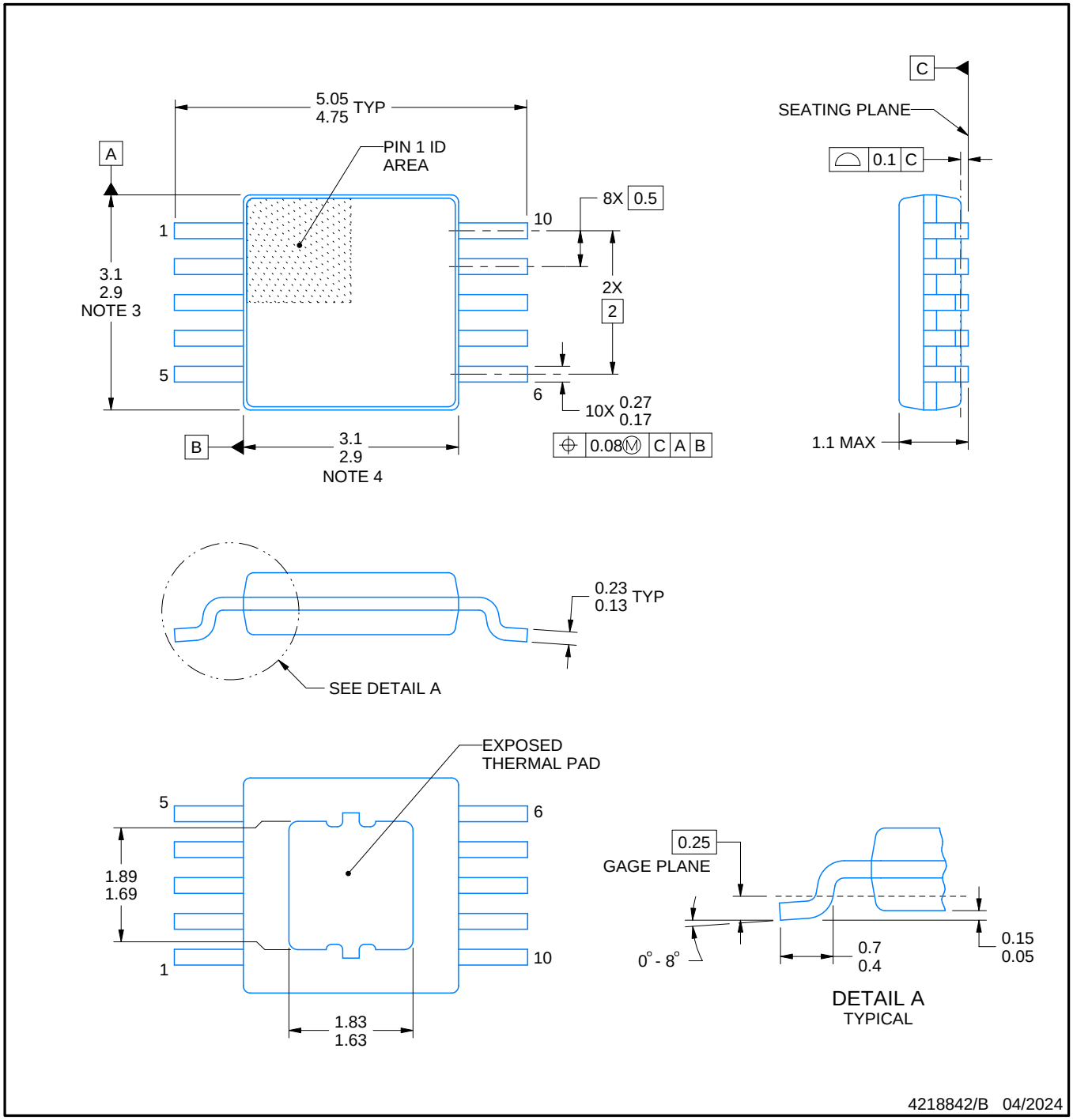

PowerPAD is a trademark of Texas Instruments.

NOTES:

1. All linear dimensions are in millimeters. Any dimensions in parenthesis are for reference only. Dimensioning and tolerancing per ASME Y14.5M.
2. This drawing is subject to change without notice.
3. This dimension does not include mold flash, protrusions, or gate burrs. Mold flash, protrusions, or gate burrs shall not exceed 0.15 mm per side.
4. This dimension does not include interlead flash. Interlead flash shall not exceed 0.25 mm per side.
5. Reference JEDEC registration MO-187, variation BA-T.

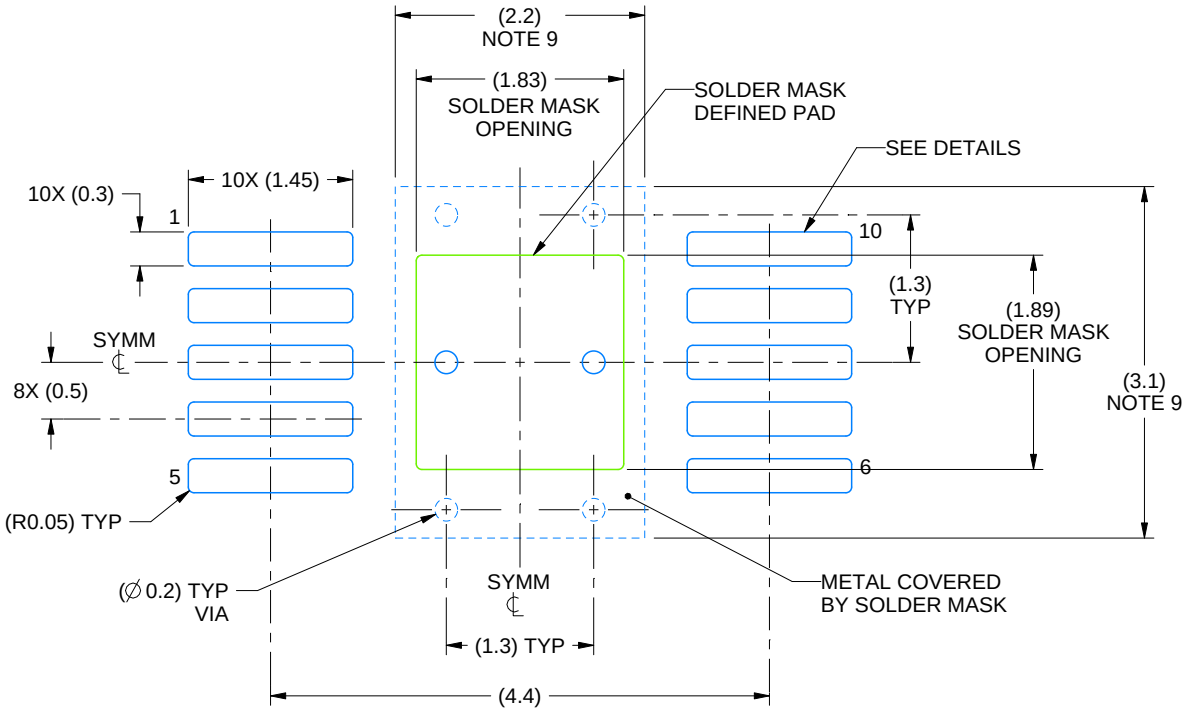

LAND PATTERN EXAMPLE
SCALE:15X

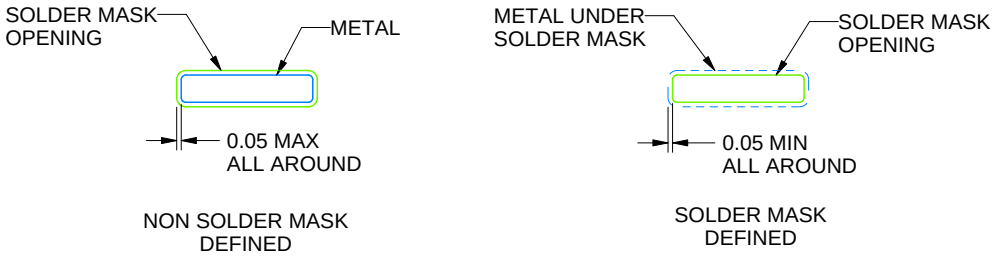

SOLDER MASK DETAILS

4218842/B 04/2024

NOTES: (continued)

6. Publication IPC-7351 may have alternate designs.
7. Solder mask tolerances between and around signal pads can vary based on board fabrication site.
8. This package is designed to be soldered to a thermal pad on the board. For more information, see Texas Instruments literature numbers SLMA002 (www.ti.com/lit/slma002) and SLMA004 (www.ti.com/lit/slma004).
9. Size of metal pad may vary due to creepage requirement.

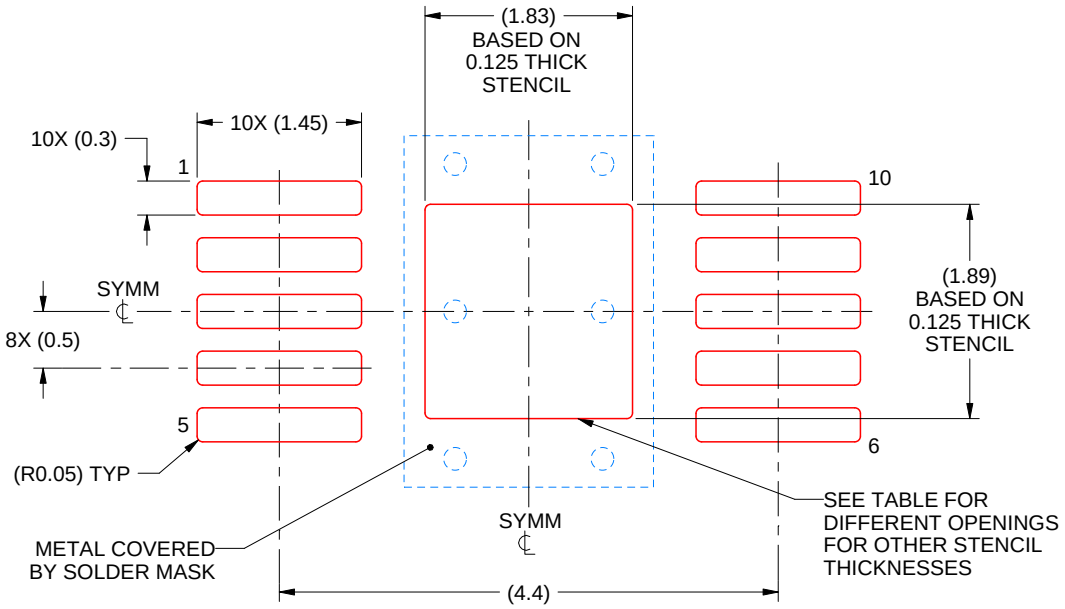

SOLDER PASTE EXAMPLE
EXPOSED PAD
100% PRINTED SOLDER COVERAGE BY AREA
SCALE:15X

STENCIL THICKNESS	SOLDER STENCIL OPENING
0.1	2.05 X 2.11
0.125	1.83 X 1.89 (SHOWN)
0.150	1.67 X 1.73
0.175	1.55 X 1.60

4218842/B 04/2024

NOTES: (continued)

10. Laser cutting apertures with trapezoidal walls and rounded corners may offer better paste release. IPC-7525 may have alternate design recommendations.
11. Board assembly site may have different recommendations for stencil design.

IMPORTANT NOTICE AND DISCLAIMER

TI PROVIDES TECHNICAL AND RELIABILITY DATA (INCLUDING DATASHEETS), DESIGN RESOURCES (INCLUDING REFERENCE DESIGNS), APPLICATION OR OTHER DESIGN ADVICE, WEB TOOLS, SAFETY INFORMATION, AND OTHER RESOURCES “AS IS” AND WITH ALL FAULTS, AND DISCLAIMS ALL WARRANTIES, EXPRESS AND IMPLIED, INCLUDING WITHOUT LIMITATION ANY IMPLIED WARRANTIES OF MERCHANTABILITY, FITNESS FOR A PARTICULAR PURPOSE OR NON-INFRINGEMENT OF THIRD PARTY INTELLECTUAL PROPERTY RIGHTS.

These resources are intended for skilled developers designing with TI products. You are solely responsible for (1) selecting the appropriate TI products for your application, (2) designing, validating and testing your application, and (3) ensuring your application meets applicable standards, and any other safety, security, regulatory or other requirements.

These resources are subject to change without notice. TI grants you permission to use these resources only for development of an application that uses the TI products described in the resource. Other reproduction and display of these resources is prohibited. No license is granted to any other TI intellectual property right or to any third party intellectual property right. TI disclaims responsibility for, and you fully indemnify TI and its representatives against any claims, damages, costs, losses, and liabilities arising out of your use of these resources.

TI’s products are provided subject to TI’s Terms of Sale, TI’s General Quality Guidelines, or other applicable terms available either on ti.com or provided in conjunction with such TI products. TI’s provision of these resources does not expand or otherwise alter TI’s applicable warranties or warranty disclaimers for TI products. Unless TI explicitly designates a product as custom or customer-specified, TI products are standard, catalog, general purpose devices.

TI objects to and rejects any additional or different terms you may propose.

Copyright © 2025, Texas Instruments Incorporated

Last updated 10/2025