TRS202 5-V Dual RS-232 Line Driver and Receiver With ±15-kV ESD Protection

1 Features

- ESD Protection for RS-232 Bus Pins:
  - ±15-kV Human-Body Model (HBM)
- Meets or Exceeds the Requirements of TIA/EIA-232-F and ITU v.28 Standards
- Operates at 5-V V_{CC} Supply
- Operates up to 120 kbit/s
- External Capacitors: 4 × 0.1 µF
- Latch-Up Performance Exceeds 100 mA Per JESD 78, Class II

2 Applications

- Battery-Powered Systems
- Notebooks
- Set Top Boxes
- Palmtop PCs
- Hand-Held Equipment

3 Description

The TRS202 device consists of two line drivers, two line receivers, and a dual charge-pump circuit with ±15-kV ESD protection pin-to-pin (serial-port connection pins, including GND). The device meets the requirements of TIA/EIA-232-F and provides the electrical interface between an asynchronous communication controller and the serial-port connector. The charge pump and four small external capacitors allow operation from a single 5-V supply. The device operates at data signaling rates up to 120 kbit/s and a maximum of 30-V/µs driver output slew rate.

Device Information(1)

PART NUMBER	PACKAGE	BODY SIZE (NOM)
TRS202ID	SOIC (16)	9.90 mm × 3.91 mm
TRS202IPW	TSSOP (16)	5.00 mm × 4.40 mm

(1) For all available packages, see the orderable addendum at the end of the data sheet.

Block Diagram

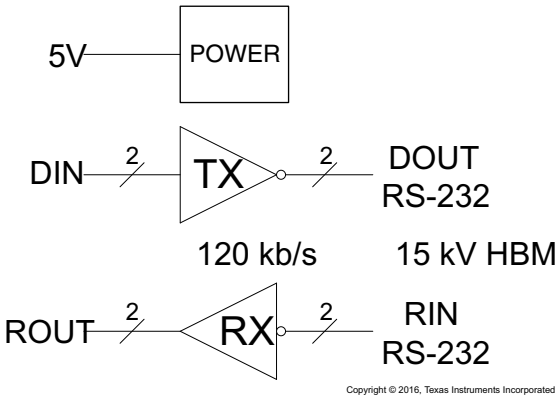

Copyright © 2016, Texas Instruments Incorporated

An IMPORTANT NOTICE at the end of this data sheet addresses availability, warranty, changes, use in safety-critical applications, intellectual property matters and other important disclaimers. UNLESS OTHERWISE NOTED, this document contains PRODUCTION DATA.

Table of Contents

1 Features ... 1
2 Applications ... 1
3 Description ... 1
4 Revision History ... 2
5 Pin Configuration and Functions ... 3
6 Specifications ... 4
6.1 Absolute Maximum Ratings ... 4
6.2 ESD Ratings ... 4
6.3 Recommended Operating Conditions ... 4
6.4 Thermal Information ... 5
6.5 Electrical Characteristics ... 5
6.6 Electrical Characteristics: Driver ... 5
6.7 Electrical Characteristics: Receiver ... 5
6.8 Switching Characteristics: Driver ... 6
6.9 Switching Characteristics: Receiver ... 6
6.10 Typical Characteristics ... 6
7 Parameter Measurement Information ... 8
8 Detailed Description ... 9
8.1 Overview ... 9
8.2 Functional Block Diagram ... 9
8.3 Feature Description ... 9
8.4 Device Functional Modes ... 9
9 Application and Implementation ... 11
9.1 Application Information ... 11
9.2 Typical Application ... 12
10 Power Supply Recommendations ... 14
11 Layout ... 14
11.1 Layout Guidelines ... 14
11.2 Layout Example ... 14
12 Device and Documentation Support ... 15
12.1 Receiving Notification of Documentation Updates 15
12.2 Community Resources ... 15
12.3 Trademarks ... 15
12.4 Electrostatic Discharge Caution ... 15
12.5 Glossary ... 15
13 Mechanical, Packaging, and Orderable Information ... 15

4 Revision History

NOTE: Page numbers for previous revisions may differ from page numbers in the current version.

Changes from Original (July 2007) to Revision A	Page
• Added *ESD Ratings* table, *Feature Description* section, *Device Functional Modes*, *Application and Implementation* section, *Power Supply Recommendations* section, *Layout* section, *Device and Documentation Support* section, and *Mechanical, Packaging, and Orderable Information* section	1
• Deleted *Ordering Information* table; see *Package Option Addendum* at the end of the data sheet	1
• Changed Junction-to-ambient, $R_{\theta JA}$, values in *Thermal Information* table From: 73°C/W To: 76.2°C/W (D) and From: 108°C/W To: 101°C/W (PW)	5
• Deleted $R_{\theta JA}$ values for DW and N packages	5

Copyright © 2007–2016, Texas Instruments Incorporated

5 Pin Configuration and Functions

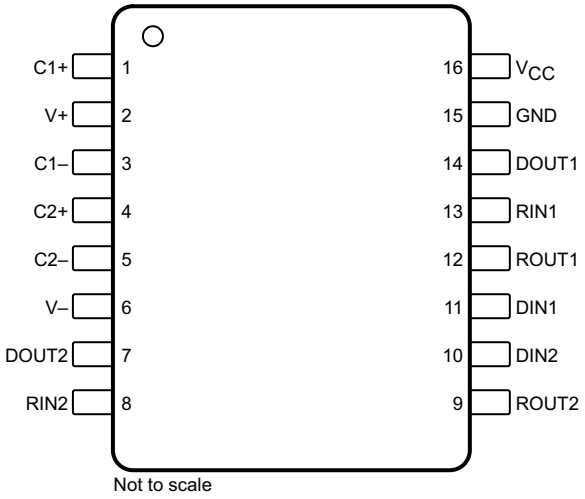

Not to scale

Pin Functions

PIN		I/O	DESCRIPTION
NO.	NAME		
1	C1+	—	Positive lead of C1 capacitor
2	V+	O	Positive charge pump output for storage capacitor only
3	C1–	—	Negative lead of C1 capacitor
4	C2+	—	Positive lead of C2 capacitor
5	C2–	—	Negative lead of C2 capacitor
6	V–	O	Negative charge pump output for storage capacitor only
7	DOUT2	O	RS-232 line data output (to remote RS-232 system)
8	RIN2	I	RS-232 line data input (from remote RS-232 system)
9	ROUT2	O	Logic data output (to UART)
10	DIN2	I	Logic data input (from UART)
11	DIN1	I	Logic data input (from UART)
12	ROUT1	O	Logic data output (to UART)
13	RIN1	I	RS-232 line data input (from remote RS-232 system)
14	DOUT1	O	RS-232 line data output (to remote RS-232 system)
15	GND	—	Ground
16	V_{CC}	—	Supply voltage, connect to external 5-V power supply

Copyright © 2007–2016, Texas Instruments Incorporated

6 Specifications

6.1 Absolute Maximum Ratings

over operating free-air temperature range (unless otherwise noted)(1)

		MIN	MAX	UNIT
Supply voltage, V_{CC}(2)		–0.3	6	V
Positive charge pump voltage, V+(2)		V_{CC} – 0.3	14	V
Negative charge pump voltage, V–(2)		–14	0.3	V
Input voltage, V_I	Drivers	–0.3	V+ + 0.3	V
	Receivers		±30	
Output voltage, V_O	Drivers	V– – 0.3	V+ + 0.3	V
	Receivers	–0.3	V_{CC} + 0.3	
Short-circuit duration, DOUT		Continuous		
Operating virtual junction temperature, T_J			150	°C
Storage temperature, T_{stg}		–65	150	°C

(1) Stresses beyond those listed under *Absolute Maximum Ratings* may cause permanent damage to the device. These are stress ratings only, which do not imply functional operation of the device at these or any other conditions beyond those indicated under *Recommended Operating Conditions*. Exposure to absolute-maximum-rated conditions for extended periods may affect device reliability.
(2) All voltages are with respect to network GND.

6.2 ESD Ratings

				VALUE	UNIT
$V_{(ESD)}$	Electrostatic discharge	Human-body model (HBM), per ANSI/ESDA/JEDEC JS-001(1)	Pins 7, 8, 13, 14, and 15	±15000	V
			All other pins	±2000	
		Charged-device model (CDM), per JEDEC specification JESD22-C101(2)		±1500	

(1) JEDEC document JEP155 states that 500-V HBM allows safe manufacturing with a standard ESD control process.
(2) JEDEC document JEP157 states that 250-V CDM allows safe manufacturing with a standard ESD control process.

6.3 Recommended Operating Conditions

see Figure 12(1)

			MIN	NOM	MAX	UNIT
	Supply voltage		4.5	5	5.5	V
V_{IH}	Driver high-level input voltage (DIN)		2			V
V_{IL}	Driver low-level input voltage (DIN)				0.8	V
V_I	Driver input voltage (DIN)		0		5.5	V
	Receiver input voltage (RIN)		–30		30	
T_A	Operating free-air temperature	TRS202C	0		70	°C
		TRS202I	–40		85	

(1) Test conditions are C1 to C4 = 0.1 µF at V_{CC} = 5 V ±0.5 V.

Copyright © 2007–2016, Texas Instruments Incorporated

6.4 Thermal Information

THERMAL METRIC[1]		TRS202		UNIT
		D (SOIC)	PW (TSSOP)	
		16 PINS	16 PINS	
$R_{\theta JA}$	Junction-to-ambient thermal resistance	76.2	101	°C/W
$R_{\theta JC(top)}$	Junction-to-case (top) thermal resistance	36.8	36.4	°C/W
$R_{\theta JB}$	Junction-to-board thermal resistance	33.9	45.9	°C/W
ψ_{JT}	Junction-to-top characterization parameter	6.7	2.7	°C/W
ψ_{JB}	Junction-to-board characterization parameter	33.6	45.3	°C/W

(1) For more information about traditional and new thermal metrics, see the *Semiconductor and IC Package Thermal Metrics* application report.

6.5 Electrical Characteristics

over recommended ranges of supply voltage and operating free-air temperature (unless otherwise noted; see Figure 12)[1]

PARAMETER		TEST CONDITIONS	MIN	TYP[2]	MAX	UNIT
I_{CC}	Supply current	No load and V_{CC} = 5 V		8	15	mA

(1) Test conditions are C1 to C4 = 0.1 µF at V_{CC} = 5 V ±0.5 V.
(2) All typical values are at V_{CC} = 5 V and T_A = 25°C.

6.6 Electrical Characteristics: Driver

over recommended ranges of supply voltage and operating free-air temperature (unless otherwise noted; see Figure 12)[1]

PARAMETER		TEST CONDITIONS	MIN	TYP[2]	MAX	UNIT
V_{OH}	High-level output voltage	DOUT at R_L = 3 kΩ to GND and DIN = GND	5	9		V
V_{OL}	Low-level output voltage	DOUT at R_L = 3 kΩ to GND and DIN = V_{CC}	–5	–9		V
I_{IH}	High-level input current	V_I = V_{CC}		15	200	µA
I_{IL}	Low-level input current	V_I at 0 V		–15	–200	µA
I_{OS}[3]	Short-circuit output current	V_{CC} = 5.5 V and V_O = 0 V		±10	±60	mA
r_o	Output resistance	V_{CC}, V+, V– = 0 V, and V_O = ±2 V	300			Ω

(1) Test conditions are C1 to C4 = 0.1 µF at V_{CC} = 5 V ±0.5 V.
(2) All typical values are at V_{CC} = 5 V and T_A = 25°C.
(3) Short-circuit durations must be controlled to prevent exceeding the device absolute power dissipation ratings, and not more than one output must be shorted at a time.

6.7 Electrical Characteristics: Receiver

over recommended ranges of supply voltage and operating free-air temperature (unless otherwise noted; see Figure 12)[1]

PARAMETER		TEST CONDITIONS	MIN	TYP[2]	MAX	UNIT
V_{OH}	High-level output voltage	I_{OH} = –1 mA	3.5	V_{CC} – 0.4		V
V_{OL}	Low-level output voltage	I_{OL} = 1.6 mA			0.4	V
V_{IT+}	Positive-going input threshold voltage	V_{CC} = 5 V and T_A = 25°C		1.7	2.4	V
$V_{IT–}$	Negative-going input threshold voltage	V_{CC} = 5 V and T_A = 25°C	0.8	1.2		V
V_{hys}	Input hysteresis (V_{IT+} – $V_{IT–}$)		0.2	0.5	1	V
r_I	Input resistance	V_I = ±3 V to ±25 V	3	5	7	kΩ

(1) Test conditions are C1 to C4 = 0.1 µF at V_{CC} = 5 V ±0.5 V.
(2) All typical values are at V_{CC} = 5 V and T_A = 25°C.

Copyright © 2007–2016, Texas Instruments Incorporated

6.8 Switching Characteristics: Driver

over recommended ranges of supply voltage and operating free-air temperature (unless otherwise noted; see Figure 12)(1)

PARAMETER		TEST CONDITIONS	MIN	TYP(2)	MAX	UNIT
	Maximum data rate	C_L = 50 to 1000 pF, one DOUT switching, and R_L = 3 kΩ to 7 kΩ (see Figure 6)	120			kbit/s
$t_{PLH(D)}$	Propagation delay time, low- to high-level output	C_L = 2500 pF, all drivers loaded, and R_L = 3 kΩ (see Figure 6)		2		µs
$t_{PHL(D)}$	Propagation delay time, high- to low-level output	C_L = 2500 pF, all drivers loaded, and R_L = 3 kΩ (see Figure 6)		2		µs
$t_{sk(p)}$	Pulse skew(3)	C_L = 150 pF to 2500 pF and R_L = 3 kΩ to 7 kΩ (see Figure 7)		300		ns
SR(tr)	Slew rate, transition region	C_L = 50 pF to 1000 pF, V_{CC} = 5 V, and R_L = 3 kΩ to 7 kΩ (see Figure 6)	3	6	30	V/µs

(1) Test conditions are C1 to C4 = 0.1 µF at V_{CC} = 5 V ±0.5 V.
(2) All typical values are at V_{CC} = 5 V and T_A = 25°C.
(3) Pulse skew is defined as $|t_{PLH} - t_{PHL}|$ of each channel of the same device.

6.9 Switching Characteristics: Receiver

over recommended ranges of supply voltage and operating free-air temperature (unless otherwise noted; see Figure 8)(1)

PARAMETER		TEST CONDITIONS	MIN	TYP(2)	MAX	UNIT
$t_{PLH(R)}$	Propagation delay time, low- to high-level output	C_L = 150 pF		0.5	10	µs
$t_{PHL(R)}$	Propagation delay time, high- to low-level output	C_L = 150 pF		0.5	10	µs
$t_{sk(p)}$	Pulse skew(3)			300		ns

(1) Test conditions are C1 to C4 = 0.1 µF at V_{CC} = 5 V ±0.5 V.
(2) All typical values are at V_{CC} = 5 V and T_A = 25°C.
(3) Pulse skew is defined as $|t_{PLH} - t_{PHL}|$ of each channel of the same device.

6.10 Typical Characteristics

T_A = 25°C (unless otherwise noted)

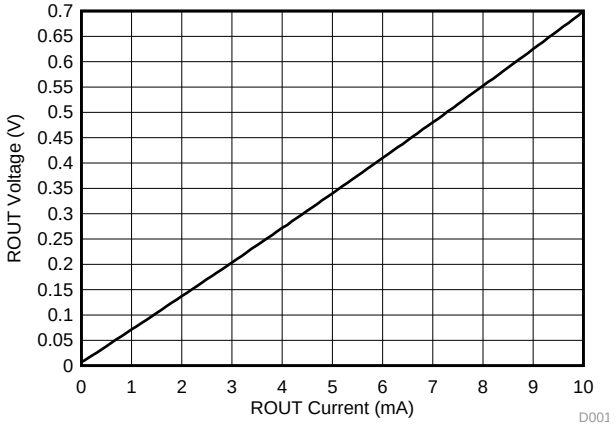

Figure 1. Receiver V_{OL} vs Output Current

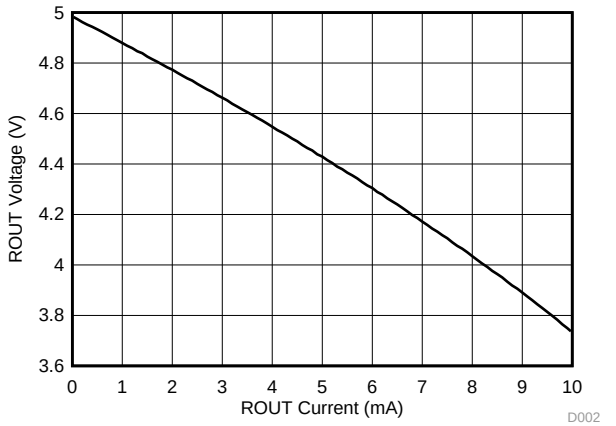

Figure 2. Receiver V_{OH} vs Output Current

Copyright © 2007–2016, Texas Instruments Incorporated

Typical Characteristics (continued)

T_A = 25°C (unless otherwise noted)

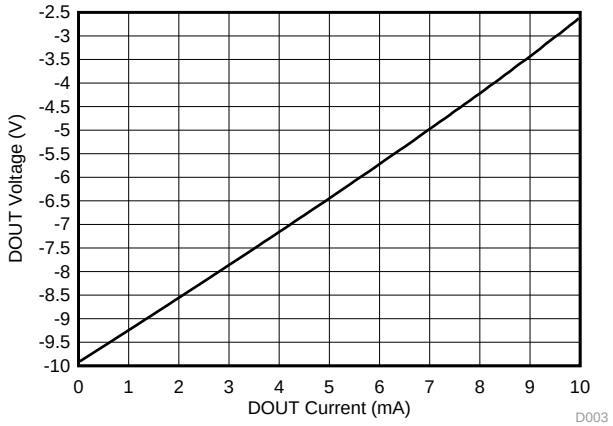

Figure 3. Driver V_{OL} vs Output Current

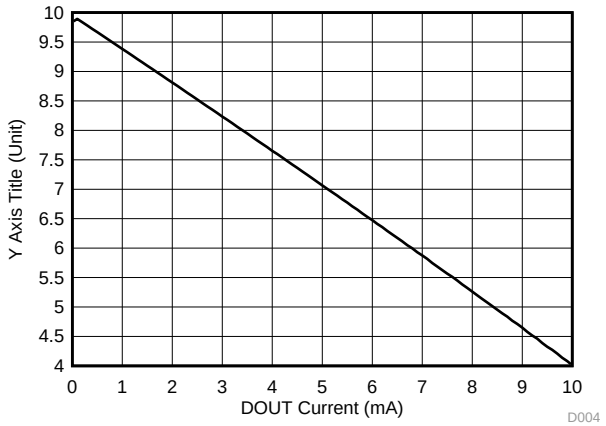

Figure 4. Driver V_{OH} vs Output Current

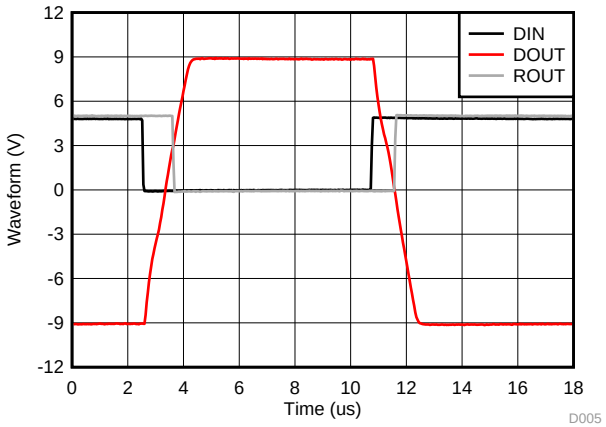

Figure 5. Driver and Receiver Loopback Waveforms

Copyright © 2007–2016, Texas Instruments Incorporated

7 Parameter Measurement Information

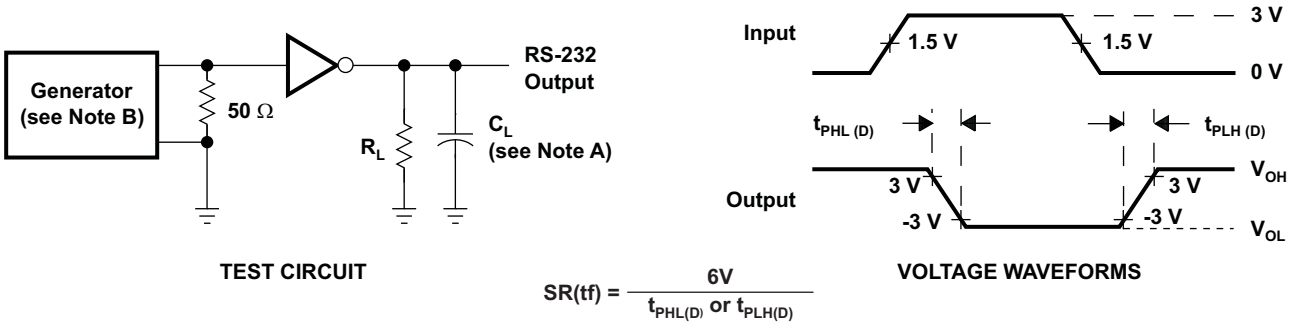

TEST CIRCUIT

$$SR(tf) = \frac{6V}{t_{PHL(D)} \text{ or } t_{PLH(D)}}$$

VOLTAGE WAVEFORMS

NOTES: A. C_L includes probe and jig capacitance.
B. The pulse generator has the following characteristics: PRR = 120 kbit/s, Z_O = 50 Ω, 50% duty cycle, $t_r \le 10$ ns, $t_f \le 10$ ns.

Figure 6. Driver Slew Rate

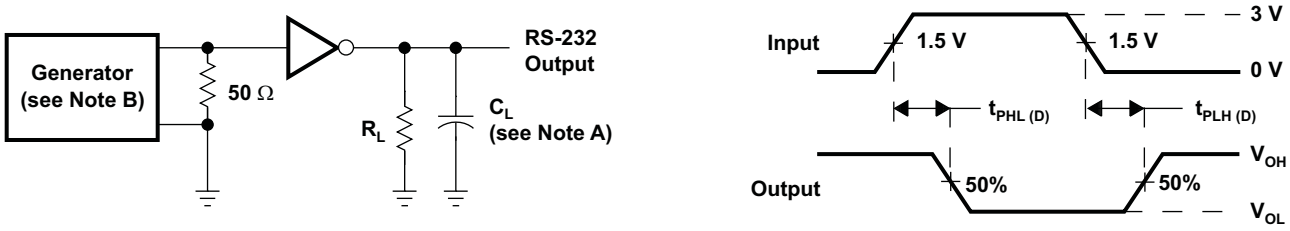

TEST CIRCUIT

VOLTAGE WAVEFORMS

NOTES: A. C_L includes probe and jig capacitance.
B. The pulse generator has the following characteristics: PRR = 120 kbit/s, Z_O = 50 Ω, 50% duty cycle, $t_r \le 10$ ns, $t_f \le 10$ ns.

Figure 7. Driver Pulse Skew

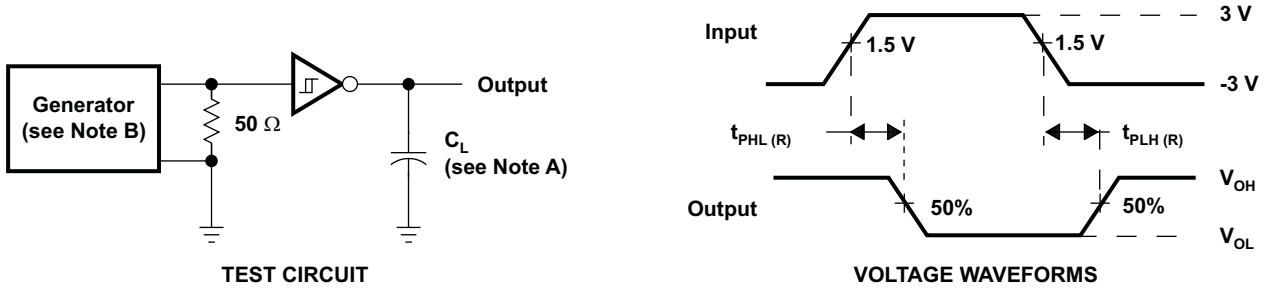

TEST CIRCUIT

VOLTAGE WAVEFORMS

NOTES: A. C_L includes probe and jig capacitance.
B. The pulse generator has the following characteristics: Z_O = 50 Ω, 50% duty cycle, $t_r \le 10$ ns, $t_f \le 10$ ns.

Figure 8. Receiver Propagation Delay Times

Copyright © 2007–2016, Texas Instruments Incorporated

8 Detailed Description

8.1 Overview

The TRS202 device is a dual driver and receiver that includes a capacitive voltage generator using four capacitors to supply TIA/EIA-232-F voltage levels from a single 5-V supply. Each receiver converts TIA/EIA-232-F inputs to 5-V TTL/CMOS levels. These receivers have shorted and open fail safe. The receiver can accept up to ±30-V inputs and decode inputs as low as ±3 V. Each driver converts TTL/CMOS input levels into TIA/EIA-232-F levels. Outputs are protected against shorts to ground.

8.2 Functional Block Diagram

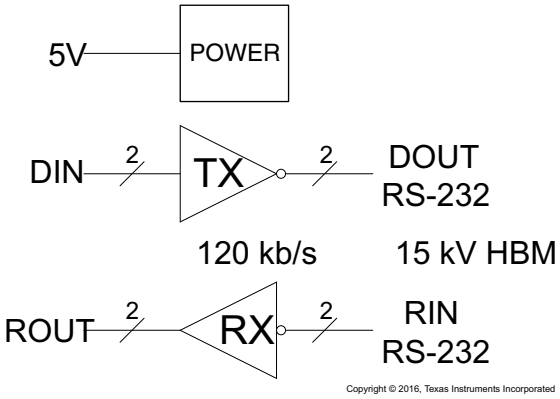

8.3 Feature Description

8.3.1 Power

The power block increases and inverts the 5-V supply for the RS-232 driver using a charge pump that requires four 0.1-µF external capacitors.

8.3.2 RS-232 Driver

Two drivers interface standard logic levels to RS-232 levels. The driver inputs do not have internal pullup resistors. Do not float the driver inputs.

8.3.3 RS-232 Receiver

Two Schmitt trigger receivers interface RS-232 levels to standard logic levels. Each receiver has an internal 5-kΩ load to ground. An open input results in a high output on ROUT.

8.4 Device Functional Modes

8.4.1 V_{CC} Powered by 5 V

The device is in normal operation when powered by 5 V.

8.4.2 V_{CC} Unpowered

When TRS202 is unpowered, it can be safely connected to an active remote RS-232 device.

Copyright © 2007–2016, Texas Instruments Incorporated

Device Functional Modes (continued)

8.4.3 Truth Tables

Table 1 and Table 2 list the function for each driver and receiver (respectively). Figure 9 shows the logic diagram.

Table 1. Function Table for Each Driver(1)

INPUT DIN	OUTPUT DOUT
L	H
H	L

(1) H = High level, L = Low level

Table 2. Function Table for Each Receiver(1)

INPUT RIN	OUTPUT ROUT
L	H
H	L
Open	H

(1) H = High level, L = Low level,
Open = Input disconnected or connected driver off

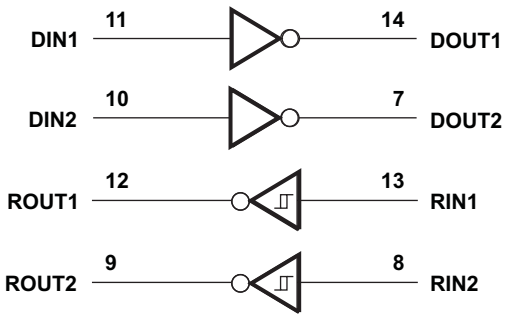

Figure 9. Logic Diagram (Positive Logic)

Copyright © 2007–2016, Texas Instruments Incorporated

9 Application and Implementation

NOTE

Information in the following applications sections is not part of the TI component specification, and TI does not warrant its accuracy or completeness. TI's customers are responsible for determining suitability of components for their purposes. Customers should validate and test their design implementation to confirm system functionality.

9.1 Application Information

For proper operation, add capacitors as shown in Figure 12. Pins 9 through 12 connect to UART or general purpose logic lines. RS-232 lines on pins 7, 8, 13, and 14 connect to a connector or cable.

9.1.1 Capacitor Selection

The capacitor type used for C1–C4 is not critical for proper operation. The TRS202 requires 0.1-µF capacitors, although capacitors up to 10 µF can be used without harm. Ceramic dielectrics are suggested for the 0.1-µF capacitors. When using the minimum recommended capacitor values, make sure the capacitance value does not degrade excessively as the operating temperature varies. If in doubt, use capacitors with a larger (for example, 2×) nominal value. The capacitors' effective series resistance (ESR), which usually rises at low temperatures, influences the amount of ripple on V+ and V–.

Use larger capacitors (up to 10 µF) to reduce the output impedance at V+ and V–.

Bypass V_{CC} to ground with at least 0.1 µF. In applications sensitive to power-supply noise generated by the charge pumps, decouple V_{CC} to ground with a capacitor the same size as (or larger than) the charge-pump capacitors (C1 to C4).

9.1.2 Electrostatic Discharge (ESD) Protection

TI TRS202 devices have standard ESD protection structures incorporated on the pins to protect against electrostatic discharges encountered during assembly and handling. In addition, the RS232 bus pins (driver outputs and receiver inputs) of these devices have an extra level of ESD protection. Advanced ESD structures were designed to successfully protect these bus pins against ESD discharge of ±15 kV when powered down.

9.1.3 ESD Test Conditions

Stringent ESD testing is performed by TI, based on various conditions and procedures. Contact TI for a reliability report that documents test setup, methodology, and results.

9.1.4 Human-Body Model (HBM)

The HBM of ESD testing is shown in Figure 10. Figure 11 shows the current waveform that is generated during a discharge into a low impedance. The model consists of a 100-pF capacitor, charged to the ESD voltage of concern, and subsequently discharged into the device under test (DUT) through a 1.5-kΩ resistor.

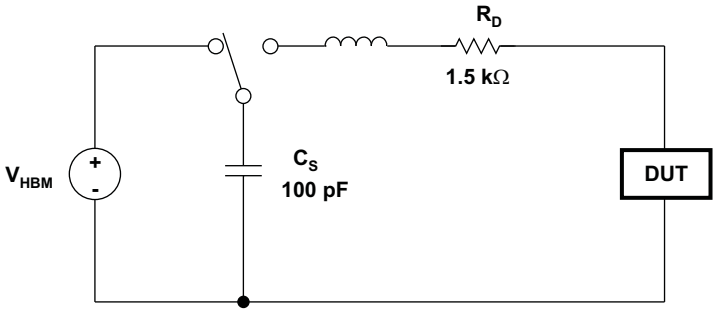

Figure 10. HBM ESD Test Circuit

Application Information (continued)

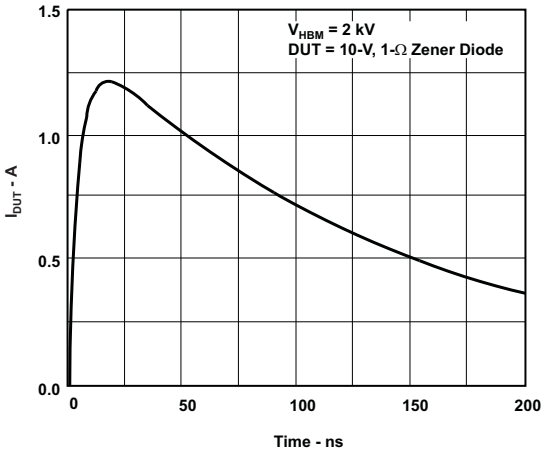

Figure 11. Typical HBM Current Waveform

9.2 Typical Application

Two driver and two receiver channels are supported for full duplex transmission with hardware flow control. The two 5-kΩ resistors are internal to the TRS202.

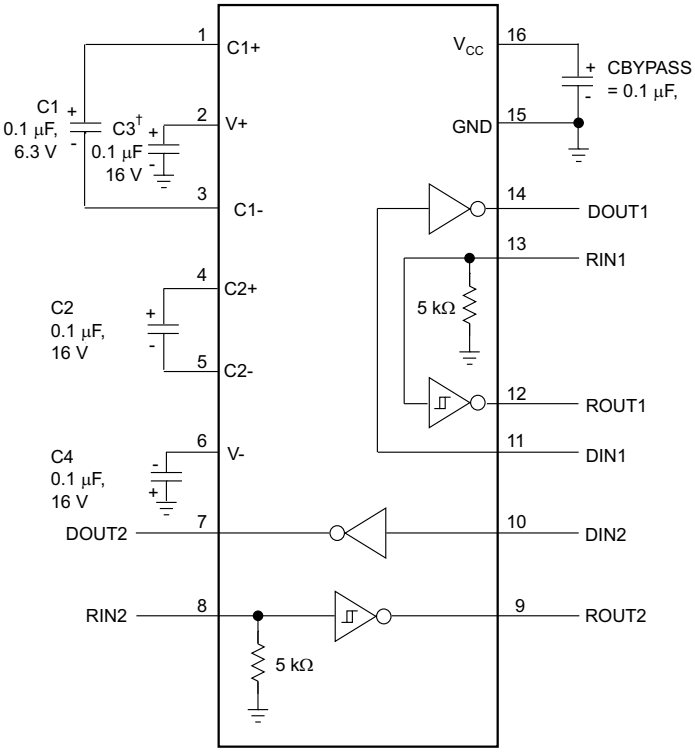

† C3 can be connected to V_{CC} or GND.

NOTES: A. Resistor values shown are nominal.

B. Nonpolarized ceramic capacitors are acceptable. If polarized tantalum or electrolytic capacitors are used, they should be connected as shown.

Copyright © 2016, Texas Instruments Incorporated

Figure 12. Typical Operating Circuit and Capacitor Values

Copyright © 2007–2016, Texas Instruments Incorporated

Typical Application (continued)

9.2.1 Design Requirements

- V_{CC} minimum is 4.5 V and maximum is 5.5 V.
- Maximum recommended bit rate is 120 kbps.

9.2.2 Detailed Design Procedure

9.2.2.1 Capacitor Selection

The capacitor type used for C1 through C4 is not critical for proper operation. The TRS202 requires 0.1-µF capacitors. Capacitors up to 10 µF can be used without harm. Ceramic dielectrics are suggested for the 0.1-µF capacitors. When using the minimum recommended capacitor values, make sure the capacitance value does not degrade excessively as the operating temperature varies. If in doubt, use capacitors with a larger (for example, 2×) nominal value. The capacitors' effective series resistance (ESR), which usually rises at low temperatures, influences the amount of ripple on V+ and V–.

Use larger capacitors (up to 10 µF) to reduce the output impedance at V+ and V–.

Bypass V_{CC} to ground with at least 0.1 µF. In applications sensitive to power-supply noise generated by the charge pumps, decouple V_{CC} to ground with a capacitor the same size as (or larger than) the charge-pump capacitors (C1 to C4).

9.2.3 Application Curve

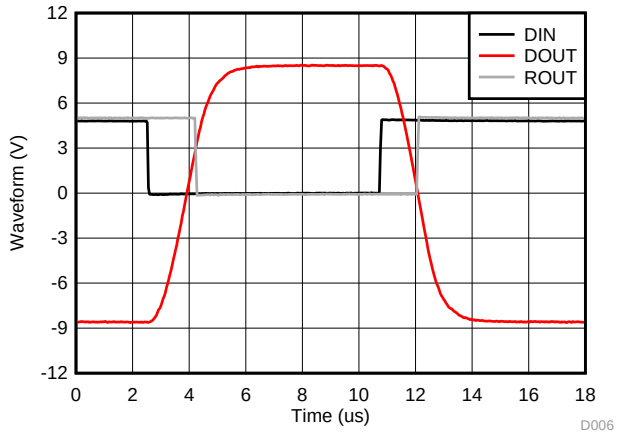

120 kbit/s, 1-nF load

Figure 13. Driver and Receiver Loopback Signal

10 Power Supply Recommendations

The V_{CC} voltage must be connected to the same power source used for logic device connected to DIN and ROUT pins. V_{CC} must be between 4.5 V and 5.5 V.

11 Layout

11.1 Layout Guidelines

Keep the external capacitor traces short. This is more important on C1 and C2 nodes that have the fastest rise and fall times. For best ESD performance, make the impedance from TRS202 ground pin to the ground plane of the circuit board as low as possible. Use wide metal and multiple vias on both sides of ground pin.

11.2 Layout Example

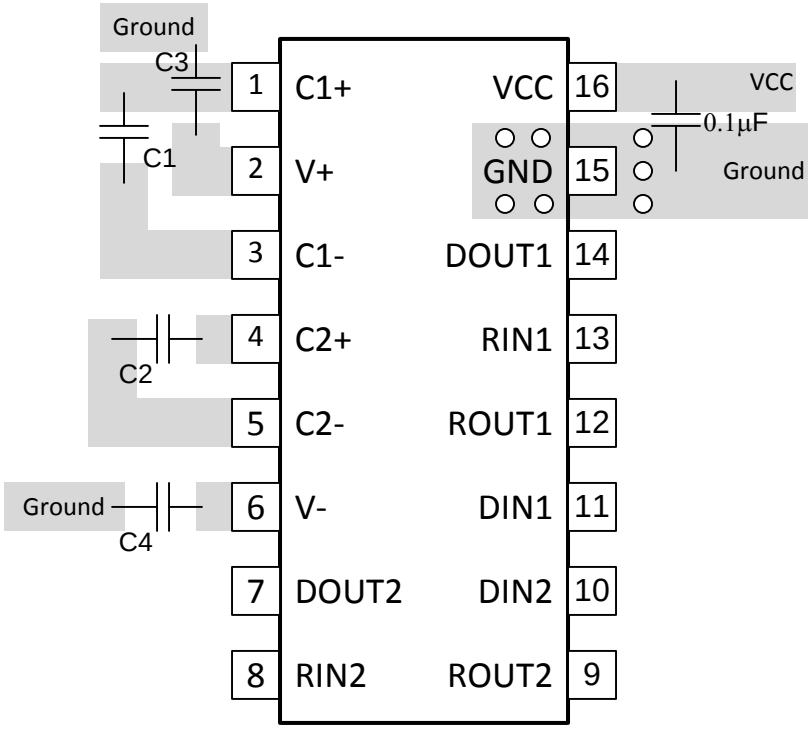

Figure 14. TRS202 Circuit Board Layout

Copyright © 2007–2016, Texas Instruments Incorporated

12 Device and Documentation Support

12.1 Receiving Notification of Documentation Updates

To receive notification of documentation updates, navigate to the device product folder on ti.com. In the upper right corner, click on *Alert me* to register and receive a weekly digest of any product information that has changed. For change details, review the revision history included in any revised document.

12.2 Community Resources

The following links connect to TI community resources. Linked contents are provided "AS IS" by the respective contributors. They do not constitute TI specifications and do not necessarily reflect TI's views; see TI's Terms of Use.

TI E2E™ Online Community ***TI's Engineer-to-Engineer (E2E) Community.*** Created to foster collaboration among engineers. At e2e.ti.com, you can ask questions, share knowledge, explore ideas and help solve problems with fellow engineers.

Design Support ***TI's Design Support*** Quickly find helpful E2E forums along with design support tools and contact information for technical support.

12.3 Trademarks

E2E is a trademark of Texas Instruments.
All other trademarks are the property of their respective owners.

12.4 Electrostatic Discharge Caution



This integrated circuit can be damaged by ESD. Texas Instruments recommends that all integrated circuits be handled with appropriate precautions. Failure to observe proper handling and installation procedures can cause damage.

ESD damage can range from subtle performance degradation to complete device failure. Precision integrated circuits may be more susceptible to damage because very small parametric changes could cause the device not to meet its published specifications.

12.5 Glossary

SLYZ022 — *TI Glossary*.

This glossary lists and explains terms, acronyms, and definitions.

13 Mechanical, Packaging, and Orderable Information

The following pages include mechanical, packaging, and orderable information. This information is the most current data available for the designated devices. This data is subject to change without notice and revision of this document. For browser-based versions of this data sheet, refer to the left-hand navigation.

Copyright © 2007–2016, Texas Instruments Incorporated

PACKAGING INFORMATION

Orderable part number	Status (1)	Material type (2)	Package | Pins	Package qty | Carrier	RoHS (3)	Lead finish/ Ball material (4)	MSL rating/ Peak reflow (5)	Op temp (°C)	Part marking (6)
TRS202ID	Obsolete	Production	SOIC (D) | 16	-	-	Call TI	Call TI	-40 to 85	TRS202I
TRS202IDR	Obsolete	Production	SOIC (D) | 16	-	-	Call TI	Call TI	-40 to 85	TRS202I
TRS202IPWR	Obsolete	Production	TSSOP (PW) | 16	-	-	Call TI	Call TI	-40 to 85	RU02I

(1) **Status:** For more details on status, see our product life cycle.

(2) **Material type:** When designated, preproduction parts are prototypes/experimental devices, and are not yet approved or released for full production. Testing and final process, including without limitation quality assurance, reliability performance testing, and/or process qualification, may not yet be complete, and this item is subject to further changes or possible discontinuation. If available for ordering, purchases will be subject to an additional waiver at checkout, and are intended for early internal evaluation purposes only. These items are sold without warranties of any kind.

(3) **RoHS values:** Yes, No, RoHS Exempt. See the TI RoHS Statement for additional information and value definition.

(4) **Lead finish/Ball material:** Parts may have multiple material finish options. Finish options are separated by a vertical ruled line. Lead finish/Ball material values may wrap to two lines if the finish value exceeds the maximum column width.

(5) **MSL rating/Peak reflow:** The moisture sensitivity level ratings and peak solder (reflow) temperatures. In the event that a part has multiple moisture sensitivity ratings, only the lowest level per JEDEC standards is shown. Refer to the shipping label for the actual reflow temperature that will be used to mount the part to the printed circuit board.

(6) **Part marking:** There may be an additional marking, which relates to the logo, the lot trace code information, or the environmental category of the part.

Multiple part markings will be inside parentheses. Only one part marking contained in parentheses and separated by a "~" will appear on a part. If a line is indented then it is a continuation of the previous line and the two combined represent the entire part marking for that device.

Important Information and Disclaimer: The information provided on this page represents TI's knowledge and belief as of the date that it is provided. TI bases its knowledge and belief on information provided by third parties, and makes no representation or warranty as to the accuracy of such information. Efforts are underway to better integrate information from third parties. TI has taken and continues to take reasonable steps to provide representative and accurate information but may not have conducted destructive testing or chemical analysis on incoming materials and chemicals. TI and TI suppliers consider certain information to be proprietary, and thus CAS numbers and other limited information may not be available for release.

In no event shall TI's liability arising out of such information exceed the total purchase price of the TI part(s) at issue in this document sold by TI to Customer on an annual basis.

D (R–PDSO–G16) PLASTIC SMALL OUTLINE

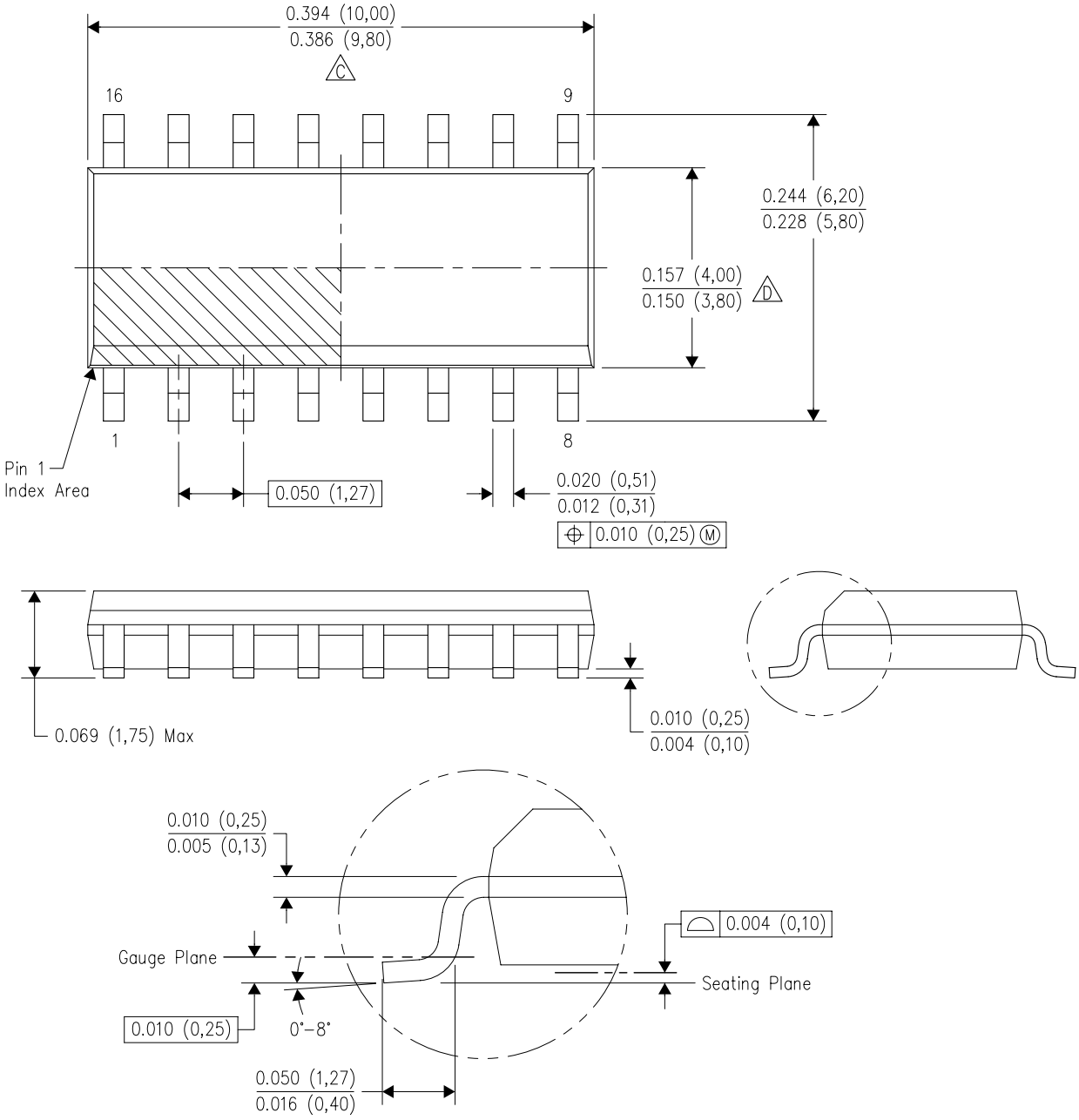

NOTES:
A. All linear dimensions are in inches (millimeters).
B. This drawing is subject to change without notice.
C. Body length does not include mold flash, protrusions, or gate burrs. Mold flash, protrusions, or gate burrs shall not exceed 0.006 (0,15) each side.
D. Body width does not include interlead flash. Interlead flash shall not exceed 0.017 (0,43) each side.
E. Reference JEDEC MS–012 variation AC.

PACKAGE OUTLINE

PW0016A

TSSOP - 1.2 mm max height

SMALL OUTLINE PACKAGE

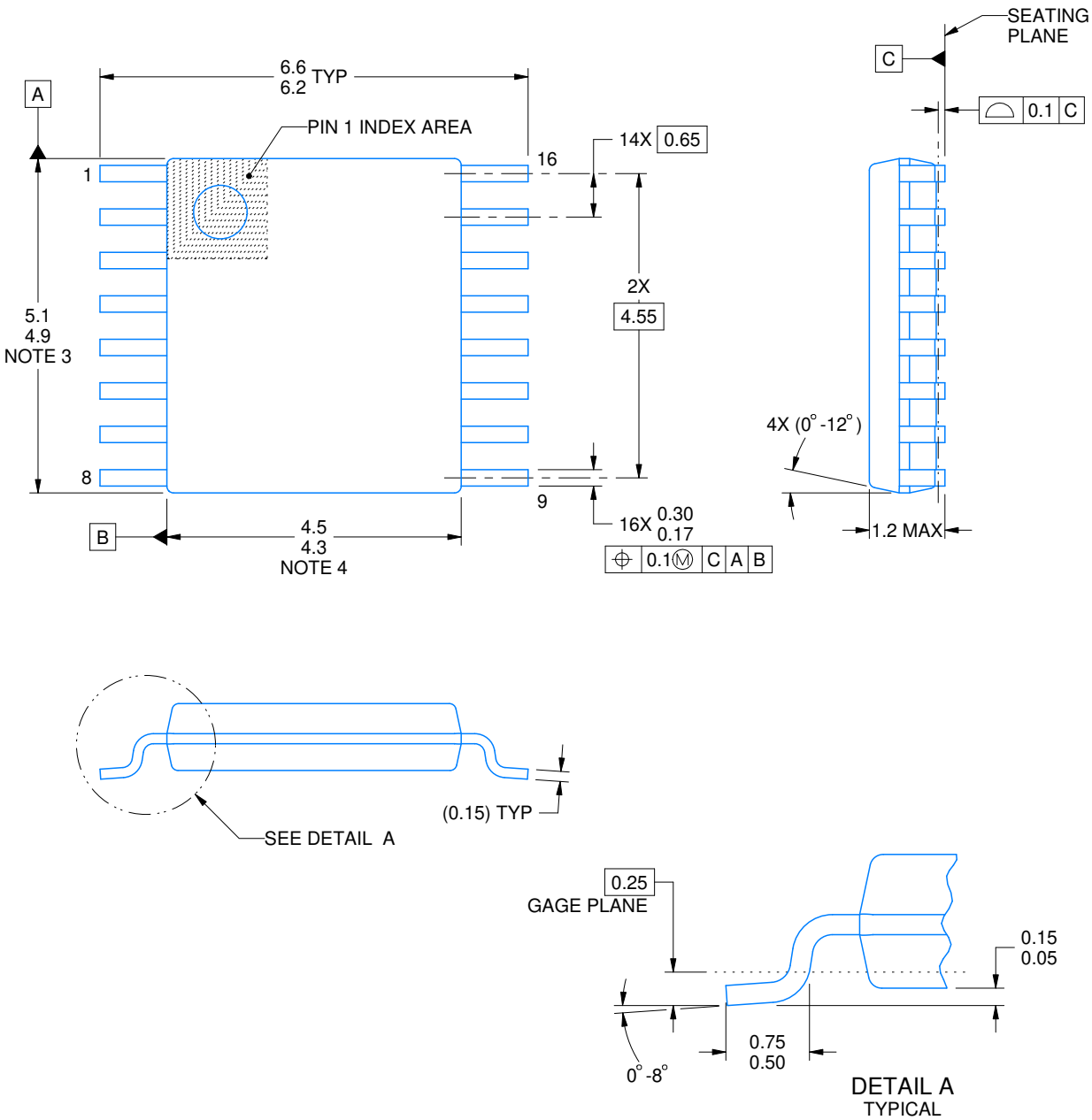

NOTES:

1. All linear dimensions are in millimeters. Any dimensions in parenthesis are for reference only. Dimensioning and tolerancing per ASME Y14.5M.
2. This drawing is subject to change without notice.
3. This dimension does not include mold flash, protrusions, or gate burrs. Mold flash, protrusions, or gate burrs shall not exceed 0.15 mm per side.
4. This dimension does not include interlead flash. Interlead flash shall not exceed 0.25 mm per side.
5. Reference JEDEC registration MO-153.

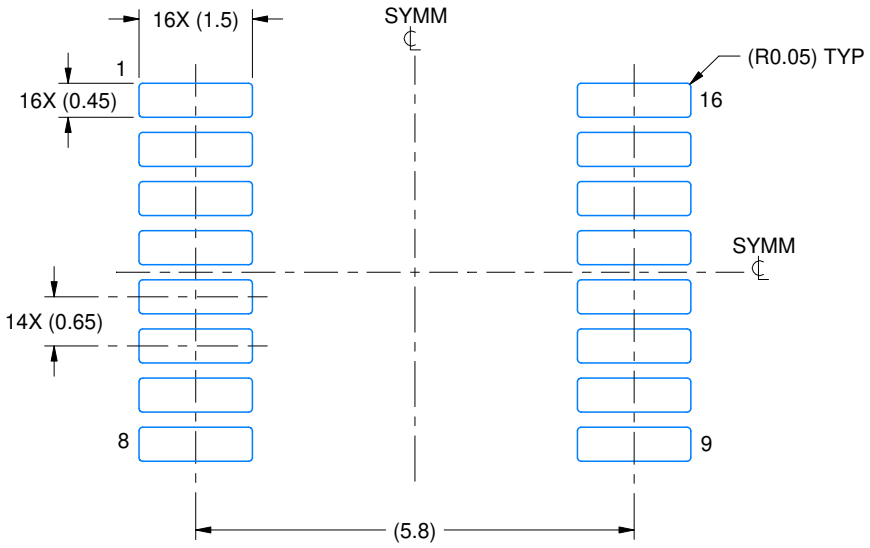

LAND PATTERN EXAMPLE
EXPOSED METAL SHOWN
SCALE: 10X

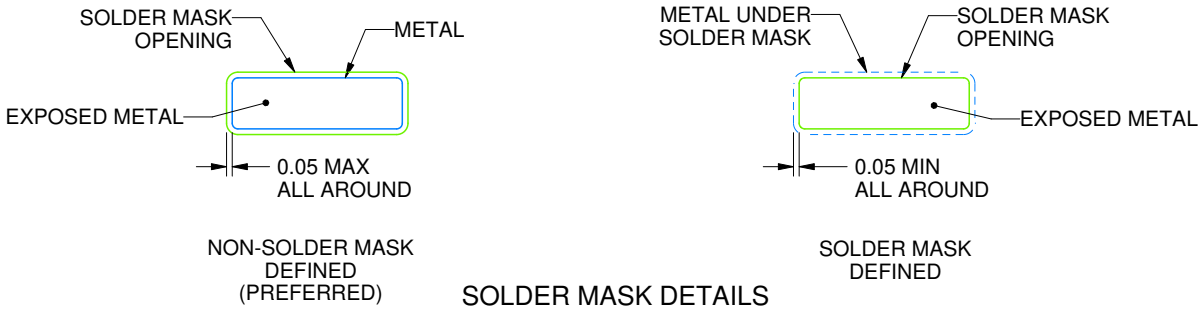

SOLDER MASK DETAILS

4220204/B 12/2023

NOTES: (continued)

6. Publication IPC-7351 may have alternate designs.
7. Solder mask tolerances between and around signal pads can vary based on board fabrication site.

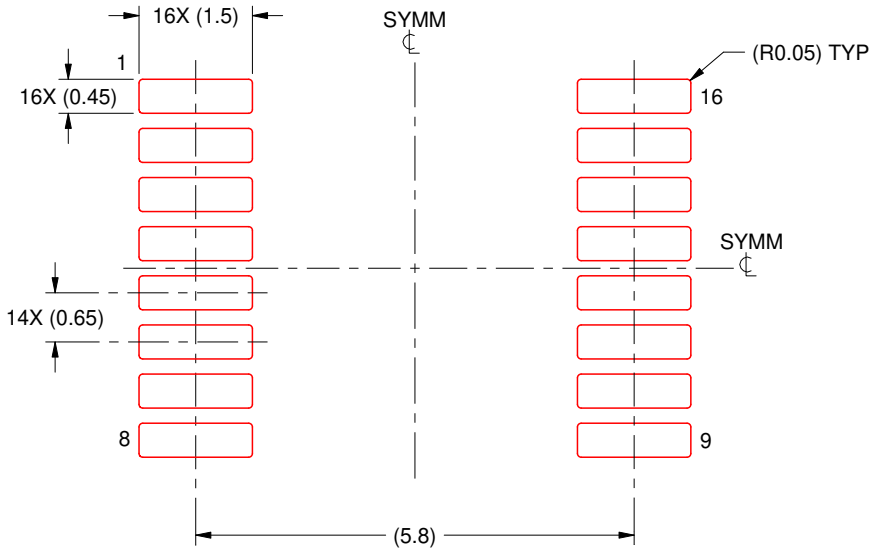

SOLDER PASTE EXAMPLE
BASED ON 0.125 mm THICK STENCIL
SCALE: 10X

4220204/B 12/2023

NOTES: (continued)

8. Laser cutting apertures with trapezoidal walls and rounded corners may offer better paste release. IPC-7525 may have alternate design recommendations.
9. Board assembly site may have different recommendations for stencil design.

IMPORTANT NOTICE AND DISCLAIMER

TI PROVIDES TECHNICAL AND RELIABILITY DATA (INCLUDING DATASHEETS), DESIGN RESOURCES (INCLUDING REFERENCE DESIGNS), APPLICATION OR OTHER DESIGN ADVICE, WEB TOOLS, SAFETY INFORMATION, AND OTHER RESOURCES “AS IS” AND WITH ALL FAULTS, AND DISCLAIMS ALL WARRANTIES, EXPRESS AND IMPLIED, INCLUDING WITHOUT LIMITATION ANY IMPLIED WARRANTIES OF MERCHANTABILITY, FITNESS FOR A PARTICULAR PURPOSE OR NON-INFRINGEMENT OF THIRD PARTY INTELLECTUAL PROPERTY RIGHTS.

These resources are intended for skilled developers designing with TI products. You are solely responsible for (1) selecting the appropriate TI products for your application, (2) designing, validating and testing your application, and (3) ensuring your application meets applicable standards, and any other safety, security, regulatory or other requirements.

These resources are subject to change without notice. TI grants you permission to use these resources only for development of an application that uses the TI products described in the resource. Other reproduction and display of these resources is prohibited. No license is granted to any other TI intellectual property right or to any third party intellectual property right. TI disclaims responsibility for, and you fully indemnify TI and its representatives against any claims, damages, costs, losses, and liabilities arising out of your use of these resources.

TI’s products are provided subject to TI’s Terms of Sale, TI’s General Quality Guidelines, or other applicable terms available either on ti.com or provided in conjunction with such TI products. TI’s provision of these resources does not expand or otherwise alter TI’s applicable warranties or warranty disclaimers for TI products. Unless TI explicitly designates a product as custom or customer-specified, TI products are standard, catalog, general purpose devices.

TI objects to and rejects any additional or different terms you may propose.

Copyright © 2026, Texas Instruments Incorporated

Last updated 10/2025