TRS202E 5-V Dual RS-232 Line Driver and Receiver With ±15-kV IEC ESD Protection

1 Features

- IEC61000-4-2 (Level 4) ESD protection for RS-232 bus pins:
  - ±8kV Contact discharge
  - ±15k-V Air-gap discharge
  - ±15kV Human-body model
- Meets or exceeds the requirements of TIA/EIA-232-F and ITU v.28 standards
- Operates at 5V V_{CC} supply
- Operates Up to 120kbit/s
- External capacitors: 4 × 0.1μF or 4 × 1μF
- Latch-up performance exceeds 100mA per JESD 78, class II

2 Applications

- Battery-powered systems
- Notebooks
- Laptops
- Set-Top Boxes
- Hand-held equipment

3 Description

The TRS202E consists of two line drivers, two line receivers, and a dual charge-pump circuit. TRS202E has IEC61000-4-2 (Level 4) ESD protection pin-to-pin (serial-port connection pins, including GND). The device meets the requirements of TIA/EIA-232-F and provides the electrical interface between an asynchronous communication controller and the serial-port connector. The charge pump and four small external capacitors allow operation from a single 5V supply. The device operates at data signaling rates up to 120kbit/s and a maximum of 30V/μs driver output slew rate.

Package Information

PART NUMBER	PACKAGE(1)	PACKAGE SIZE(2)
TRS202E	SOIC (D) (16)	9.9mm × 6mm
	SOIC (DW) (16)	10.4mm × 10.3mm
	PDIP (N) (16)	19.3mm × 9.4mm
	TSSOP (PW) (16)	5mm x 6.4mm

(1) For more Information, see Section 10.
(2) The package size (length × width) is a nominal value and includes pins, where applicable.

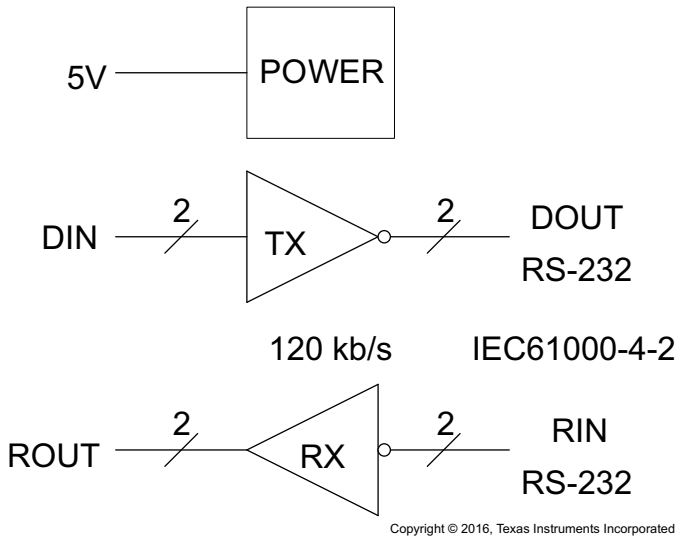

Logic Diagram (Positive Logic)

An IMPORTANT NOTICE at the end of this data sheet addresses availability, warranty, changes, use in safety-critical applications, intellectual property matters and other important disclaimers. PRODUCTION DATA.

Table of Contents

1 Features....1
2 Applications....1
3 Description....1
4 Pin Configuration and Functions....3
5 Specifications....4
5.1 Absolute Maximum Ratings....4
5.2 ESD Ratings....4
5.3 Recommended Operating Conditions....4
5.4 Thermal Information....5
5.5 Electrical Characteristics....5
5.6 Electrical Characteristics: Driver....5
5.7 Electrical Characteristics: Receiver....5
5.8 Switching Characteristics: Driver....6
5.9 Switching Characteristics: Receiver....6
5.10 Typical Characteristics....7
Parameter Measurement Information....8
6 Detailed Description....9
6.1 Overview....9
6.2 Functional Block Diagram....9
6.3 Feature Description....9
6.4 Device Functional Modes....9
7 Application and Implementation....11
7.1 Application Information....11
7.2 Typical Application....11
7.3 Power Supply Recommendations....12
7.4 Layout....13
8 Device and Documentation Support....14
8.1 Receiving Notification of Documentation Updates....14
8.2 Support Resources....14
8.3 Trademarks....14
8.4 Electrostatic Discharge Caution....14
8.5 Glossary....14
9 Revision History....14
10 Mechanical, Packaging, and Orderable Information....15

Copyright © 2024 Texas Instruments Incorporated

4 Pin Configuration and Functions

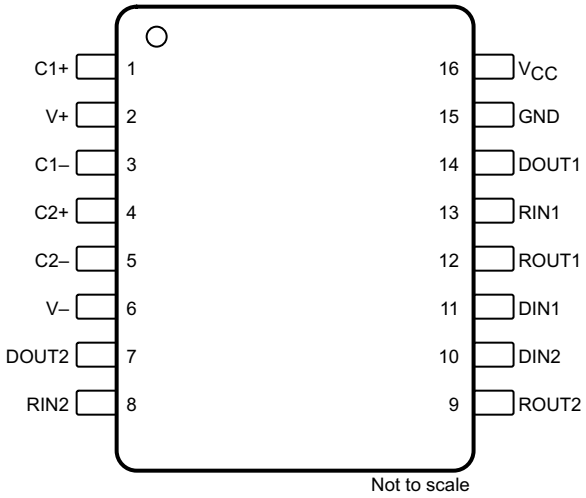

Figure 4-1. D, DW, N or PW Package, 16-Pin SOIC or TSSOP (Top View)

Table 4-1. Pin Functions

PIN		I/O	DESCRIPTION
NO.	NAME		
1	C1+	—	Positive lead of C1 capacitor
2	V+	O	Positive charge pump output for storage capacitor only
3	C1–	—	Negative lead of C1 capacitor
4	C2+	—	Positive lead of C2 capacitor
5	C2–	—	Negative lead of C2 capacitor
6	V–	O	Negative charge pump output for storage capacitor only
7	DOUT2	O	RS-232 line data output (to remote RS-232 system)
8	RIN2	I	RS-232 line data input (from remote RS-232 system)
9	ROUT2	O	Logic data output (to UART)
10	DIN2	I	Logic data input (from UART)
11	DIN1	I	Logic data input (from UART)
12	ROUT1	O	Logic data output (to UART)
13	RIN1	I	RS-232 line data input (from remote RS-232 system)
14	DOUT1	O	RS-232 line data output (to remote RS-232 system)
15	GND	—	Ground
16	V_{CC}	—	Supply voltage, connect to external 5-V power supply

Copyright © 2024 Texas Instruments Incorporated

5 Specifications

5.1 Absolute Maximum Ratings

over operating free-air temperature range (unless otherwise noted)[(1) (2)]

		MIN	MAX	UNIT
Supply voltage, V_{CC} [(2)]		–0.3	6	V
Positive charge pump voltage, V+[(2)]		V_{CC} – 0.3	14	V
Negative charge pump voltage, V–		–14	0.3	V
Input voltage, V_I	Drivers	–0.3	V+ + 0.3	V
	Receivers		±30	
Output voltage, V_O	Drivers	V– – 0.3	V+ + 0.3	V
	Receivers	–0.3	V_{CC} + 0.3	
Short-circuit duration, D_{OUT}		Continuous		
Operating virtual junction temperature, T_J			150	°C
Storage temperature, T_{stg}		–65	150	°C

(1) Stresses beyond those listed under *Absolute Maximum Ratings* may cause permanent damage to the device. These are stress ratings only, which do not imply functional operation of the device at these or any other conditions beyond those indicated under *Recommended Operating Conditions*. Exposure to absolute-maximum-rated conditions for extended periods may affect device reliability.
(2) All voltages are with respect to network GND.

5.2 ESD Ratings

			VALUE	UNIT
$V_{(ESD)}$ Electrostatic discharge	Human-body model (HBM), per ANSI/ESDA/JEDEC JS-001[(1)]	Pins 7, 8, 13, 14, 15	±15000	V
		All other pins	±2000	
	Charged-device model (CDM), per JEDEC specification JESD22-C101[(2)]	All pins	±1500	
	IEC 61000-4-2 contact discharge	Pins 7, 8, 13, 14, 15	±8000	
	IEC 61000-4-2 air-gap discharge	Pins 7, 8, 13, 14, 15	±15000	

(1) JEDEC document JEP155 states that 500V HBM allows safe manufacturing with a standard ESD control process.
(2) JEDEC document JEP157 states that 250V CDM allows safe manufacturing with a standard ESD control process.

5.3 Recommended Operating Conditions

see Figure 7-1 [(1)]

			MIN	NOM	MAX	UNIT
	Supply voltage		4.5	5	5.5	V
V_{IH}	Driver high-level input voltage (D_{IN})		2			V
V_{IL}	Driver low-level input voltage (D_{IN})				0.8	V
V_I	Driver input voltage (D_{IN})		0		5.5	V
	Receiver input voltage		–30		30	
T_A	Operating free-air temperature	TRS202EC	0		70	°C
		TRS202EI	–40		85	

(1) Test conditions are C1 to C4 = 0.1µF at V_{CC} = 5V ±0.5V.

Copyright © 2024 Texas Instruments Incorporated

5.4 Thermal Information

THERMAL METRIC[1]		D (SOIC)	DW (SOIC)	N (PDIP)	PW (TSSOP)	UNIT
		16 PINS	16 PINS	16 PINS	16 PINS	
$R_{\theta JA}$	Junction-to-ambient thermal resistance	84.6	77.1	44.1	107.5	°C/W
$R_{\theta JC(top)}$	Junction-to-case (top) thermal resistance	43.5	39.9	30.8	38.4	°C/W
$R_{\theta JB}$	Junction-to-board thermal resistance	43.2	41.8	24.2	53.7	°C/W
ψ_{JT}	Junction-to-top characterization parameter	10.4	12.9	15.2	3.2	°C/W
ψ_{JB}	Junction-to-board characterization parameter	42.8	41.3	24	53.1	°C/W

(1) For more information about traditional and new thermal metrics, see the *Semiconductor and IC Package Thermal Metrics* application report.

5.5 Electrical Characteristics

over recommended ranges of supply voltage and operating free-air temperature (unless otherwise noted; see Figure 7-1)[1]

PARAMETER		TEST CONDITIONS	MIN	TYP[2]	MAX	UNIT
I_{CC}	Supply current	No load, V_{CC} = 5V		8	15	mA

(1) Test conditions are C1 to C4 = 0.1µF at V_{CC} = 5V + 0.5V.
(2) All typical values are at V_{CC} = 5V and T_A = 25°C.

5.6 Electrical Characteristics: Driver

over recommended ranges of supply voltage and operating free-air temperature (unless otherwise noted) (see Figure 7-1)[1]

PARAMETER		TEST CONDITIONS	MIN	TYP[2]	MAX	UNIT
V_{OH}	High-level output voltage	D_{OUT} at R_L = 3kΩ to GND, D_{IN} = GND	5	9		V
V_{OL}	Low-level output voltage	D_{OUT} at R_L = 3kΩ to GND, D_{IN} = V_{CC}	–5	–9		V
I_{IH}	High-level input current	V_I = V_{CC}		15	200	µA
I_{IL}	Low-level input current	V_I at 0V		–15	–200	µA
I_{OS} [3]	Short-circuit output current	V_{CC} = 5.5V and V_O = 0V		±10	±60	mA
r_o	Output resistance	V_{CC}, V+, V– = 0V, and V_O = ±2V	300			Ω

(1) Test conditions are C1 to C4 = 0.1µF at V_{CC} = 5V + 0.5V.
(2) All typical values are at V_{CC} = 5V and T_A = 25°C.
(3) Short-circuit durations must be controlled to prevent exceeding the device absolute power-dissipation ratings, and not more than one output must be shorted at a time.

5.7 Electrical Characteristics: Receiver

over recommended ranges of supply voltage and operating free-air temperature (unless otherwise noted; see Figure 7-1)[1]

PARAMETER		TEST CONDITIONS	MIN	TYP[2]	MAX	UNIT
V_{OH}	High-level output voltage	I_{OH} = –1mA	3.5	V_{CC} – 0.4		V
V_{OL}	Low-level output voltage	I_{OL} = 1.6mA			0.4	V
V_{IT+}	Positive-going input threshold voltage	V_{CC} = 5V and T_A = 25°C		1.7	2.4	V
V_{IT-}	Negative-going input threshold voltage	V_{CC} = 5V and T_A = 25°C	0.8	1.2		V
V_{hys}	Input hysteresis (V_{IT+} – V_{IT-})		0.2	0.5	1	V
r_i	Input resistance	V_I = ±3V to ±25V	3	5	7	kΩ

(1) Test conditions are C1 to C4 = 0.1µF at V_{CC} = 5V + 0.5V.
(2) All typical values are at V_{CC} = 5V and T_A = 25°C.

Copyright © 2024 Texas Instruments Incorporated

5.8 Switching Characteristics: Driver

over recommended ranges of supply voltage and operating free-air temperature (unless otherwise noted; see Figure 7-1)[1]

PARAMETER		TEST CONDITIONS	MIN	TYP[2]	MAX	UNIT
	Maximum data rate	C_L = 50 to 1000pF, one D_{OUT} switching, and R_L = 3kΩ to 7kΩ (see Figure 6-1)	120			kbit/s
$t_{PLH(D)}$	Propagation delay time, low- to high-level output	C_L = 2500pF, all drivers loaded, and R_L = 3kΩ (see Figure 6-1)		2		µs
$t_{PHL(D)}$	Propagation delay time, high- to low-level output	C_L = 2500pF, all drivers loaded, and R_L = 3kΩ (see Figure 6-1)		2		µs
$t_{sk(p)}$	Pulse skew[3]	C_L = 150 to 2500pF and R_L = 3kΩ to 7kΩ (see Figure 6-2)		300		ns
SR(tr)	Slew rate, transition region	C_L = 50 to 1000pF, V_{CC} = 5V, and R_L = 3kΩ to 7kΩ (see Figure 6-1)	3	6	30	V/µs

(1) Test conditions are C1 to C4 = 0.1µF at V_{CC} = 5V + 0.5V.
(2) All typical values are at V_{CC} = 5V and T_A = 25°C.
(3) Pulse skew is defined as $|t_{PLH} – t_{PHL}|$ of each channel of the same device.

5.9 Switching Characteristics: Receiver

over recommended ranges of supply voltage and operating free-air temperature (unless otherwise noted; see Figure 6-3)[1]

PARAMETER		TEST CONDITIONS	MIN	TYP[2]	MAX	UNIT
$t_{PLH(R)}$	Propagation delay time, low- to high-level output	C_L = 150pF		0.5	10	µs
$t_{PHL(R)}$	Propagation delay time, high- to low-level output	C_L = 150pF		0.5	10	µs
$t_{sk(p)}$	Pulse skew[3]			300		ns

(1) Test conditions are C1 to C4 = 0.1µF at V_{CC} = 5V + 0.5V.
(2) All typical values are at V_{CC} = 5V and T_A = 25°C.
(3) Pulse skew is defined as $|t_{PLH} – t_{PHL}|$ of each channel of the same device.

Copyright © 2024 Texas Instruments Incorporated

5.10 Typical Characteristics

T_A = 25°C (unless otherwise noted)

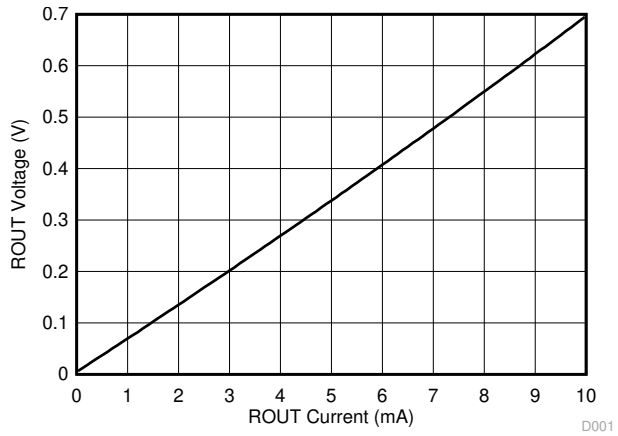

Figure 5-1. Receiver V_{OL} vs Output Current

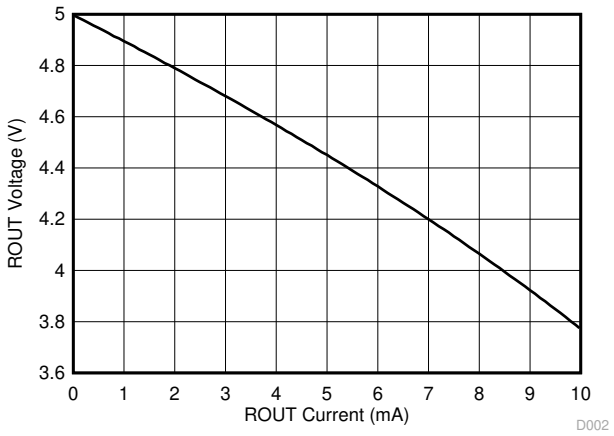

Figure 5-2. Receiver V_{OH} vs Output Current

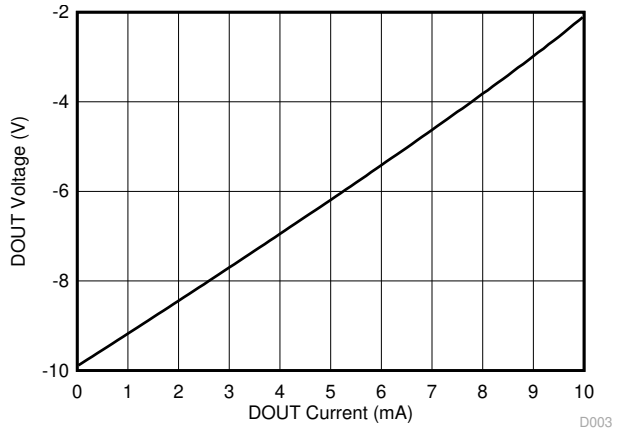

Figure 5-3. Driver V_{OL} vs Output Current

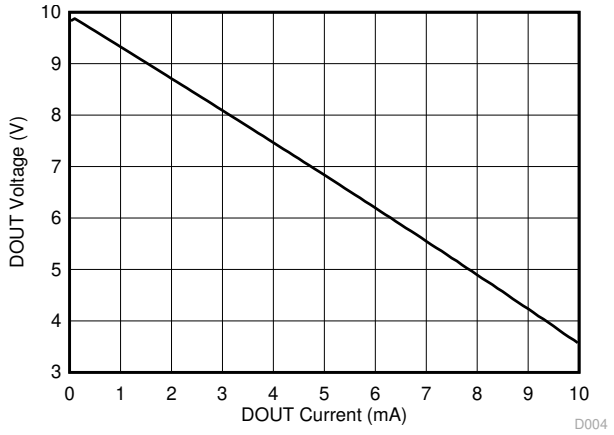

Figure 5-4. Driver V_{OH} vs Output Current

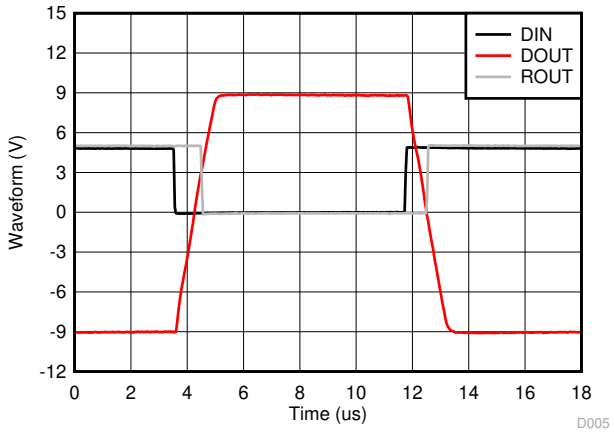

Figure 5-5. Driver and Receiver Loopback Waveforms

Parameter Measurement Information

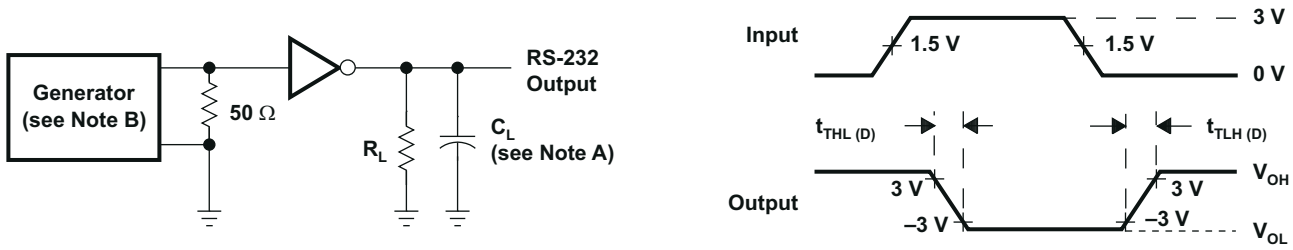

TEST CIRCUIT

$$SR(t_f) = \frac{6\ V}{t_{THL(D)}\ or\ t_{TLH(D)}}$$

VOLTAGE WAVEFORMS

NOTES: A. C_L includes probe and jig capacitance.
B. The pulse generator has the following characteristics: PRR = 120 kbit/s, Z_O = 50 Ω, 50% duty cycle, $t_r \leq 10$ ns, $t_f \leq 10$ ns.

Figure 6-1. Driver Slew Rate

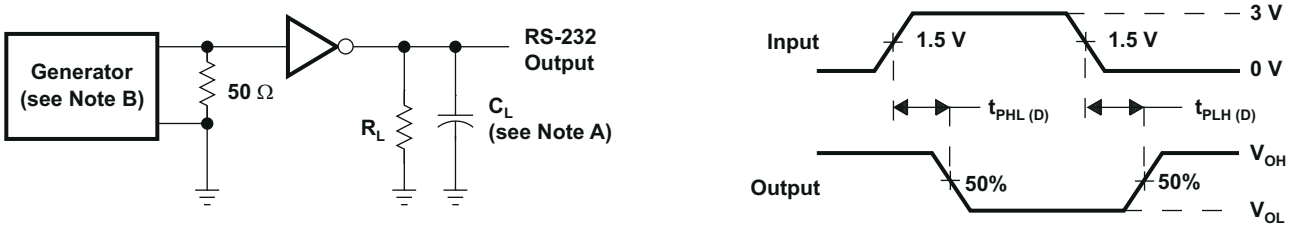

TEST CIRCUIT

VOLTAGE WAVEFORMS

NOTES: A. C_L includes probe and jig capacitance.
B. The pulse generator has the following characteristics: PRR = 120 kbit/s, Z_O = 50 Ω, 50% duty cycle, $t_r \leq 10$ ns, $t_f \leq 10$ ns.

Figure 6-2. Driver Pulse Skew

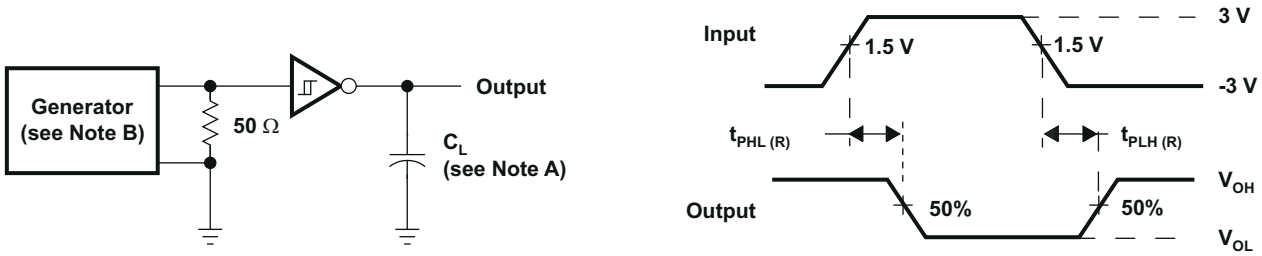

TEST CIRCUIT

VOLTAGE WAVEFORMS

NOTES: A. C_L includes probe and jig capacitance.
B. The pulse generator has the following characteristics: Z_O = 50 Ω, 50% duty cycle, $t_r \leq 10$ ns, $t_f \leq 10$ ns.

Figure 6-3. Receiver Propagation Delay Times

Copyright © 2024 Texas Instruments Incorporated

6 Detailed Description

6.1 Overview

The TRS202E device is a dual driver and receiver that includes a capacitive voltage generator using four capacitors to supply TIA/EIA-232-F voltage levels from a single 5V supply. All RS-232 pins have 15kV HBM and IEC61000-4-2 Air-Gap discharge protection. RS-232 pins also have 8-kV IEC61000-4-2 contact discharge protection. Each receiver converts TIA/EIA-232-F inputs to 5V TTL/CMOS levels. These receivers have shorted and open fail safe. The receiver can accept up to ±30V inputs and decode inputs as low as ±3V. Each driver converts TTL/CMOS input levels into TIA/EIA-232-F levels. Outputs are protected against shorts to ground.

6.2 Functional Block Diagram

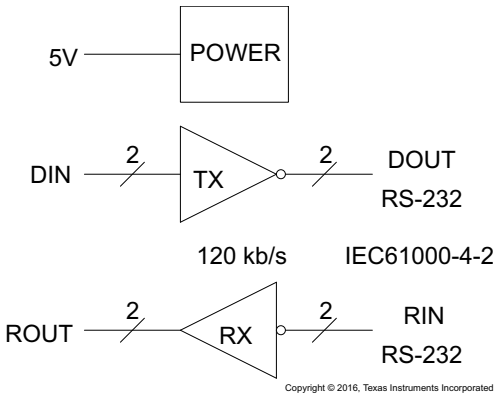

6.3 Feature Description

6.3.1 Power

The power block increases and inverts the 5V supply for the RS-232 driver using a charge pump that requires four 0.1µF or 1µF external capacitors.

6.3.2 RS-232 Driver

Two drivers interface standard logic levels to RS-232 levels. The driver inputs do not have internal pullup resistors. Do not float the driver inputs.

6.3.3 RS-232 Receiver

Two Schmitt trigger receivers interface RS-232 levels to standard logic levels. Each receiver has an internal 5-kΩ load to ground. An open input results in a high output on R_{OUT}.

6.4 Device Functional Modes

6.4.1 V_{CC} Powered by 5V

The device is in normal operation when powered by 5V.

6.4.2 V_{CC} Unpowered

When TRS202E is unpowered, it can be safely connected to an active remote RS-232 device.

6.4.3 Truth Tables

Table 6-1 and Table 6-2 list the function for each driver and receiver (respectively).

Table 6-1. Function Table for Each Driver

INPUT DIN[(1)]	OUTPUT DOUT
L	H
H	L

(1) H = high level, L = low level

Table 6-2. Function Table for Each Receiver

INPUT RIN[(1)]	OUTPUT ROUT
L	H
H	L
Open	H

(1) H = high level, L = low level,
Open = input disconnected or connected driver off

Copyright © 2024 Texas Instruments Incorporated

7 Application and Implementation

Note

Information in the following applications sections is not part of the TI component specification, and TI does not warrant its accuracy or completeness. TI's customers are responsible for determining suitability of components for their purposes, as well as validating and testing their design implementation to confirm system functionality.

7.1 Application Information

For proper operation, add capacitors as shown in Figure 7-1. Pins 9 through 12 connect to UART or general purpose logic lines. RS-232 lines on pins 7, 8, 13, and 14 connect to a connector or cable.

7.2 Typical Application

Two driver and two receiver channels are supported for full duplex transmission with hardware flow control. The two 5kΩ-resistors are internal to the TRS202E.

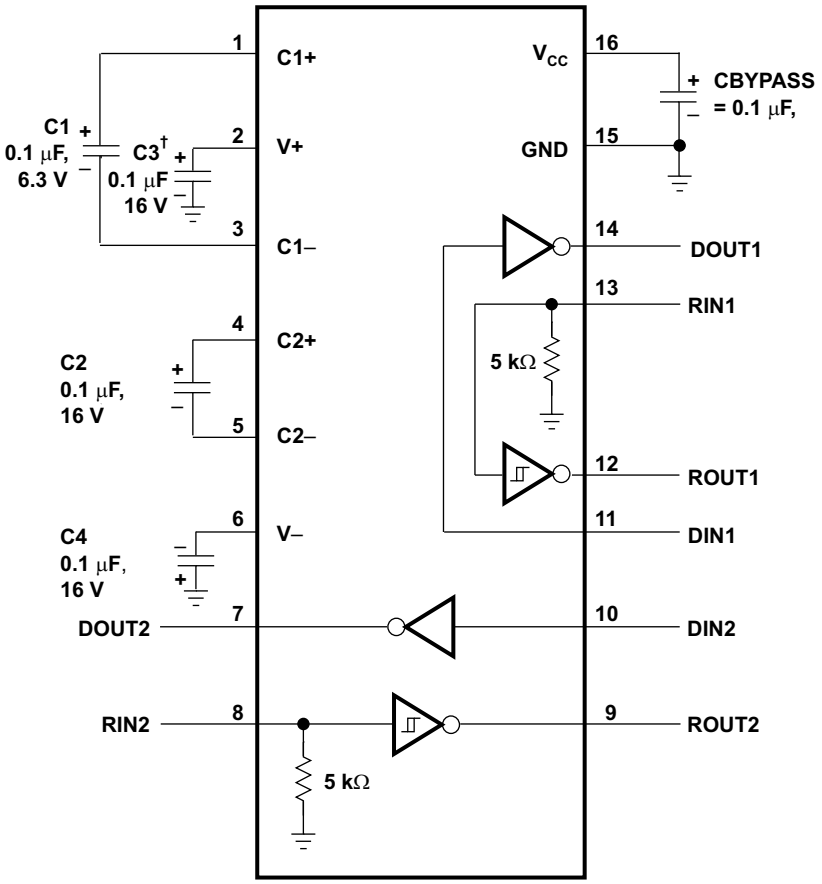

† C3 can be connected to V_{CC} or GND.

NOTES: A. Resistor values shown are nominal.

B. Nonpolarized ceramic capacitors are acceptable. If polarized tantalum or electrolytic capacitors are used, they should be connected as shown.

Copyright © 2016, Texas Instruments Incorporated

Figure 7-1. Typical Operating Circuit and Capacitor Values

7.2.1 Design Requirements

- V_{CC} minimum is 4.5V and maximum is 5.5V.
- Maximum recommended bit rate is 120kbps.

7.2.2 Detailed Design Procedure

7.2.2.1 Capacitor Selection

The capacitor type used for C1 through C4 is not critical for proper operation. The TRS202E requires 0.1µF capacitors. 1-µF capacitors are also acceptable. TI recommends ceramic dielectrics. When using the minimum recommended capacitor values, ensure the capacitance value does not degrade excessively as the operating temperature varies. If in doubt, use capacitors with a larger (for example, 2×) nominal value. The capacitors' effective series resistance (ESR), which usually rises at low temperatures, influences the amount of ripple on V+ and V–.

Bypass V_{CC} to ground with at least 0.1µF. In applications sensitive to power-supply noise generated by the charge pumps, decouple V_{CC} to ground with a capacitor the same size as (or larger than) the charge-pump capacitors (C1 to C4).

7.2.3 Application Curves

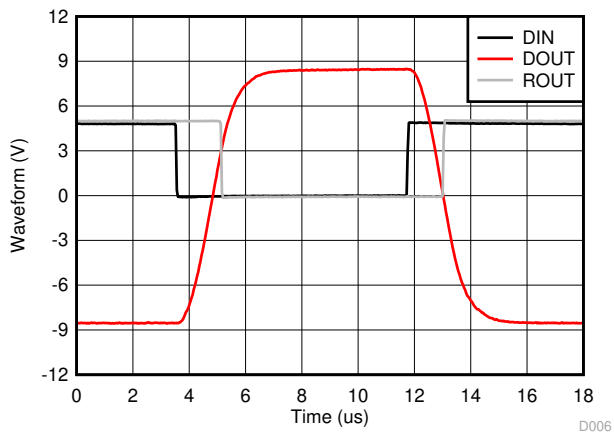

120 kbit/s, 1-nF load

Figure 7-2. Driver and Receiver Loopback Signal

7.3 Power Supply Recommendations

The V_{CC} voltage must be connected to the same power source used for logic device connected to DIN and ROUT pins. V_{CC} must be between 4.5V and 5.5V.

Copyright © 2024 Texas Instruments Incorporated

7.4 Layout

7.4.1 Layout Guidelines

Keep the external capacitor traces short. This is more important on C1 and C2 nodes that have the fastest rise and fall times. Make the impedance from TRS202E ground pin and circuit boards ground plane as low as possible for best ESD performance. Use wide metal and multiple vias on both sides of ground pin.

7.4.2 Layout Example

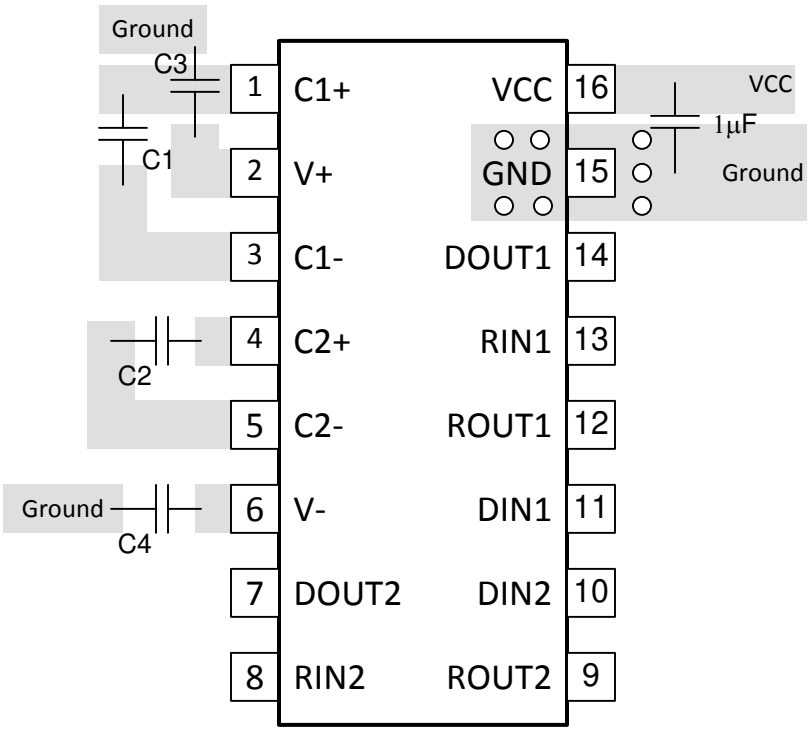

Figure 7-3. TRS202E Layout

8 Device and Documentation Support

8.1 Receiving Notification of Documentation Updates

To receive notification of documentation updates, navigate to the device product folder on ti.com. Click on *Subscribe to updates* to register and receive a weekly digest of any product information that has changed. For change details, review the revision history included in any revised document.

8.2 Support Resources

TI E2E™ support forums are an engineer's go-to source for fast, verified answers and design help — straight from the experts. Search existing answers or ask your own question to get the quick design help you need.

Linked content is provided "AS IS" by the respective contributors. They do not constitute TI specifications and do not necessarily reflect TI's views; see TI's Terms of Use.

8.3 Trademarks

TI E2E™ is a trademark of Texas Instruments.
All trademarks are the property of their respective owners.

8.4 Electrostatic Discharge Caution

This integrated circuit can be damaged by ESD. Texas Instruments recommends that all integrated circuits be handled with appropriate precautions. Failure to observe proper handling and installation procedures can cause damage.

ESD damage can range from subtle performance degradation to complete device failure. Precision integrated circuits may be more susceptible to damage because very small parametric changes could cause the device not to meet its published specifications.

8.5 Glossary

TI Glossary	This glossary lists and explains terms, acronyms, and definitions.

9 Revision History

NOTE: Page numbers for previous revisions may differ from page numbers in the current version.

Changes from Revision E (November 2016) to Revision F (February 2024) — **Page**

- Changed the *Package Information* table.... 1
- Changed the *Thermal Information* table.... 5

Changes from Revision D (November 2012) to Revision E (November 2016) — **Page**

- Added *ESD Ratings* table, *Feature Description* section, *Device Functional Modes*, *Application and Implementation* section, *Power Supply Recommendations* section, *Layout* section, *Device and Documentation Support* section, and *Mechanical, Packaging, and Orderable Information* section.... 1
- Deleted *Ordering Information* table; see *Package Option Addendum* at the end of the data sheet.... 1
- Changed Package thermal impedance, $R_{\theta JA}$, values in Thermal Information table From: 73°C/W To: 76.7°C/W (D), From: 57°C/W To: 77.1°C/W (DW), From: 67°C/W To: 44.1°C/W (N), and From: 108°C/W To: 101.7°C/W (PW).... 5

Changes from Revision C (May 2010) to Revision D (November 2012) — **Page**

- Fixed I_{OS} values in *Electrical Characteristics* table, changed – to ±.... 5

Copyright © 2024 Texas Instruments Incorporated

10 Mechanical, Packaging, and Orderable Information

The following pages include mechanical, packaging, and orderable information. This information is the most current data available for the designated devices. This data is subject to change without notice and revision of this document. For browser-based versions of this data sheet, refer to the left-hand navigation.

PACKAGING INFORMATION

Orderable part number	Status (1)	Material type (2)	Package | Pins	Package qty | Carrier	RoHS (3)	Lead finish/ Ball material (4)	MSL rating/ Peak reflow (5)	Op temp (°C)	Part marking (6)
TRS202ECD	Obsolete	Production	SOIC (D) | 16	-	-	Call TI	Call TI	0 to 70	TRS202EC
TRS202ECDR	Obsolete	Production	SOIC (D) | 16	-	-	Call TI	Call TI	0 to 70	TRS202EC
TRS202ECDWR	Active	Production	SOIC (DW) | 16	2000 | LARGE T&R	Yes	NIPDAU	Level-1-260C-UNLIM	0 to 70	TRS202EC
TRS202ECDWR.A	Active	Production	SOIC (DW) | 16	2000 | LARGE T&R	Yes	NIPDAU	Level-1-260C-UNLIM	0 to 70	TRS202EC
TRS202ECN	Active	Production	PDIP (N) | 16	25 | TUBE	Yes	NIPDAU	N/A for Pkg Type	0 to 70	TRS202ECN
TRS202ECN.A	Active	Production	PDIP (N) | 16	25 | TUBE	Yes	NIPDAU	N/A for Pkg Type	0 to 70	TRS202ECN
TRS202ECPW	Obsolete	Production	TSSOP (PW) | 16	-	-	Call TI	Call TI	0 to 70	RU02EC
TRS202ECPWR	Obsolete	Production	TSSOP (PW) | 16	-	-	Call TI	Call TI	0 to 70	RU02EC
TRS202EID	Obsolete	Production	SOIC (D) | 16	-	-	Call TI	Call TI	-40 to 85	TRS202EI
TRS202EIDR	Active	Production	SOIC (D) | 16	2500 | LARGE T&R	Yes	NIPDAU	Level-1-260C-UNLIM	-40 to 85	TRS202EI
TRS202EIDR.A	Active	Production	SOIC (D) | 16	2500 | LARGE T&R	Yes	NIPDAU	Level-1-260C-UNLIM	-40 to 85	TRS202EI
TRS202EIDW	Active	Production	SOIC (DW) | 16	40 | TUBE	Yes	NIPDAU	Level-1-260C-UNLIM	-40 to 85	TRS202EI
TRS202EIDW.A	Active	Production	SOIC (DW) | 16	40 | TUBE	Yes	NIPDAU	Level-1-260C-UNLIM	-40 to 85	TRS202EI
TRS202EIDWR	Active	Production	SOIC (DW) | 16	2000 | LARGE T&R	Yes	NIPDAU	Level-1-260C-UNLIM	-40 to 85	TRS202EI
TRS202EIDWR.A	Active	Production	SOIC (DW) | 16	2000 | LARGE T&R	Yes	NIPDAU	Level-1-260C-UNLIM	-40 to 85	TRS202EI
TRS202EIN	Active	Production	PDIP (N) | 16	25 | TUBE	Yes	NIPDAU	N/A for Pkg Type	-40 to 85	TRS202EIN
TRS202EIN.A	Active	Production	PDIP (N) | 16	25 | TUBE	Yes	NIPDAU	N/A for Pkg Type	-40 to 85	TRS202EIN
TRS202EIPWR	Active	Production	TSSOP (PW) | 16	2000 | LARGE T&R	Yes	NIPDAU	Level-1-260C-UNLIM	-40 to 85	RU02EI
TRS202EIPWR.A	Active	Production	TSSOP (PW) | 16	2000 | LARGE T&R	Yes	NIPDAU	Level-1-260C-UNLIM	-40 to 85	RU02EI
TRS202EIPWRG4	Active	Production	TSSOP (PW) | 16	2000 | LARGE T&R	Yes	NIPDAU	Level-1-260C-UNLIM	-40 to 85	RU02EI
TRS202EIPWRG4.A	Active	Production	TSSOP (PW) | 16	2000 | LARGE T&R	Yes	NIPDAU	Level-1-260C-UNLIM	-40 to 85	RU02EI

(1) **Status:** For more details on status, see our product life cycle.

(2) **Material type:** When designated, preproduction parts are prototypes/experimental devices, and are not yet approved or released for full production. Testing and final process, including without limitation quality assurance, reliability performance testing, and/or process qualification, may not yet be complete, and this item is subject to further changes or possible discontinuation. If available for ordering, purchases will be subject to an additional waiver at checkout, and are intended for early internal evaluation purposes only. These items are sold without warranties of any kind.

(3) **RoHS values:** Yes, No, RoHS Exempt. See the TI RoHS Statement for additional information and value definition.

(4) **Lead finish/Ball material:** Parts may have multiple material finish options. Finish options are separated by a vertical ruled line. Lead finish/Ball material values may wrap to two lines if the finish value exceeds the maximum column width.

(5) **MSL rating/Peak reflow:** The moisture sensitivity level ratings and peak solder (reflow) temperatures. In the event that a part has multiple moisture sensitivity ratings, only the lowest level per JEDEC standards is shown. Refer to the shipping label for the actual reflow temperature that will be used to mount the part to the printed circuit board.

(6) **Part marking:** There may be an additional marking, which relates to the logo, the lot trace code information, or the environmental category of the part.

Multiple part markings will be inside parentheses. Only one part marking contained in parentheses and separated by a "~" will appear on a part. If a line is indented then it is a continuation of the previous line and the two combined represent the entire part marking for that device.

Important Information and Disclaimer: The information provided on this page represents TI's knowledge and belief as of the date that it is provided. TI bases its knowledge and belief on information provided by third parties, and makes no representation or warranty as to the accuracy of such information. Efforts are underway to better integrate information from third parties. TI has taken and continues to take reasonable steps to provide representative and accurate information but may not have conducted destructive testing or chemical analysis on incoming materials and chemicals. TI and TI suppliers consider certain information to be proprietary, and thus CAS numbers and other limited information may not be available for release.

In no event shall TI's liability arising out of such information exceed the total purchase price of the TI part(s) at issue in this document sold by TI to Customer on an annual basis.

TAPE AND REEL INFORMATION

REEL DIMENSIONS

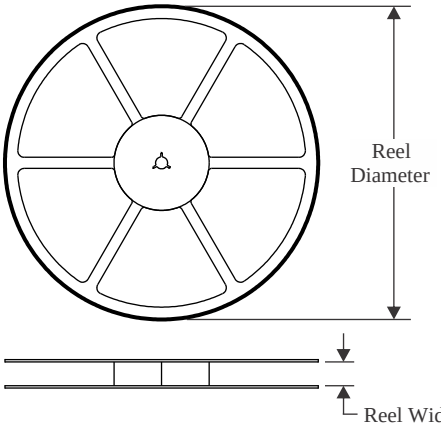

TAPE DIMENSIONS

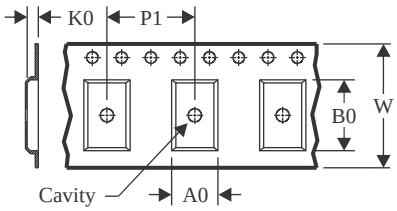

A0	Dimension designed to accommodate the component width
B0	Dimension designed to accommodate the component length
K0	Dimension designed to accommodate the component thickness
W	Overall width of the carrier tape
P1	Pitch between successive cavity centers

QUADRANT ASSIGNMENTS FOR PIN 1 ORIENTATION IN TAPE

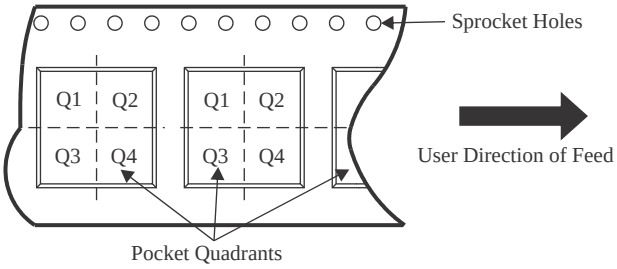

*All dimensions are nominal

Device	Package Type	Package Drawing	Pins	SPQ	Reel Diameter (mm)	Reel Width W1 (mm)	A0 (mm)	B0 (mm)	K0 (mm)	P1 (mm)	W (mm)	Pin1 Quadrant
TRS202ECDWR	SOIC	DW	16	2000	330.0	16.4	10.75	10.7	2.7	12.0	16.0	Q1
TRS202EIDR	SOIC	D	16	2500	330.0	16.4	6.5	10.3	2.1	8.0	16.0	Q1
TRS202EIDWR	SOIC	DW	16	2000	330.0	16.4	10.75	10.7	2.7	12.0	16.0	Q1
TRS202EIPWR	TSSOP	PW	16	2000	330.0	12.4	6.9	5.6	1.6	8.0	12.0	Q1
TRS202EIPWR	TSSOP	PW	16	2000	330.0	12.4	6.9	5.6	1.6	8.0	12.0	Q1
TRS202EIPWRG4	TSSOP	PW	16	2000	330.0	12.4	6.9	5.6	1.6	8.0	12.0	Q1

TAPE AND REEL BOX DIMENSIONS

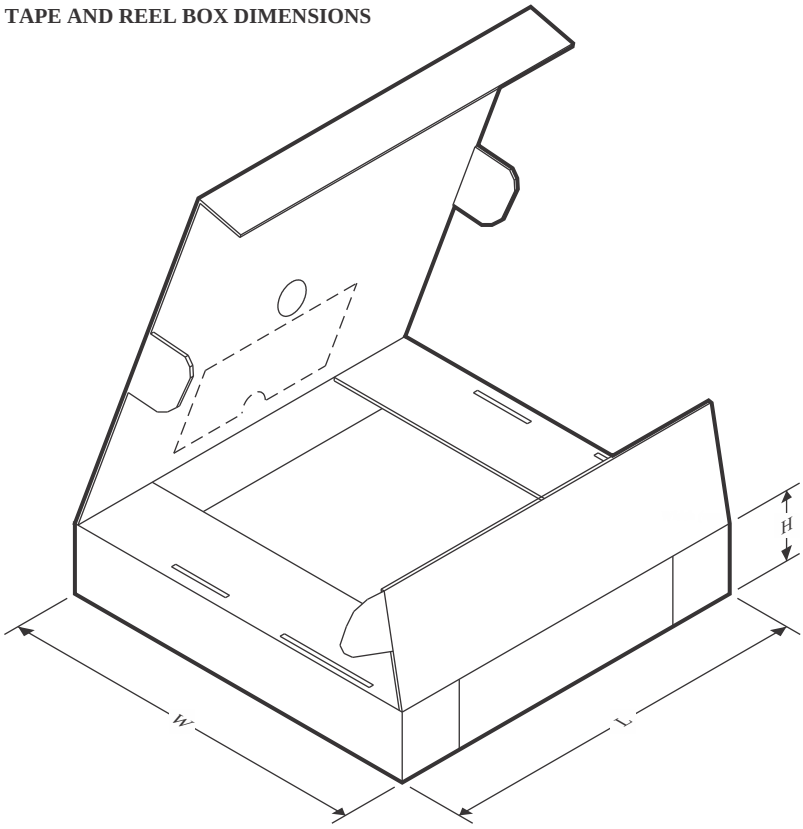

*All dimensions are nominal

Device	Package Type	Package Drawing	Pins	SPQ	Length (mm)	Width (mm)	Height (mm)
TRS202ECDWR	SOIC	DW	16	2000	350.0	350.0	43.0
TRS202EIDR	SOIC	D	16	2500	340.5	336.1	32.0
TRS202EIDWR	SOIC	DW	16	2000	350.0	350.0	43.0
TRS202EIPWR	TSSOP	PW	16	2000	367.0	367.0	35.0
TRS202EIPWR	TSSOP	PW	16	2000	353.0	353.0	32.0
TRS202EIPWRG4	TSSOP	PW	16	2000	353.0	353.0	32.0

TUBE

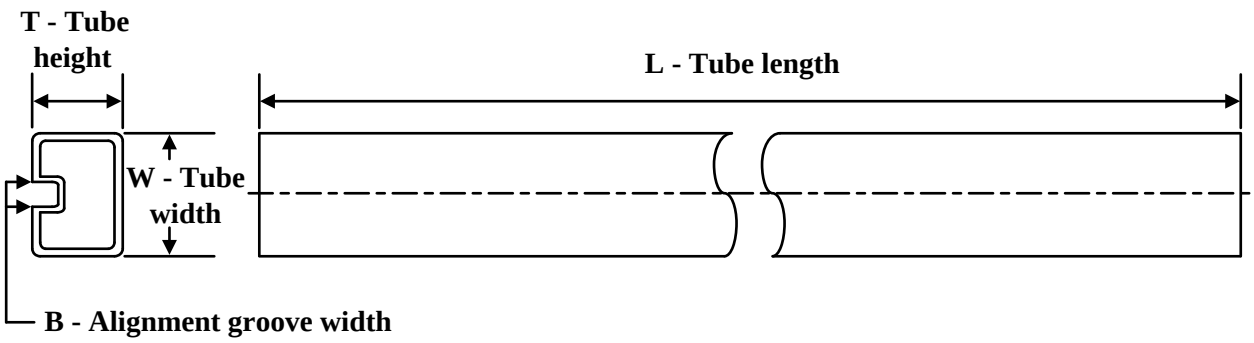

*All dimensions are nominal

Device	Package Name	Package Type	Pins	SPQ	L (mm)	W (mm)	T (µm)	B (mm)
TRS202ECN	N	PDIP	16	25	506	13.97	11230	4.32
TRS202ECN.A	N	PDIP	16	25	506	13.97	11230	4.32
TRS202EIDW	DW	SOIC	16	40	506.98	12.7	4826	6.6
TRS202EIDW.A	DW	SOIC	16	40	506.98	12.7	4826	6.6
TRS202EIN	N	PDIP	16	25	506	13.97	11230	4.32
TRS202EIN.A	N	PDIP	16	25	506	13.97	11230	4.32

D (R–PDSO–G16) PLASTIC SMALL OUTLINE

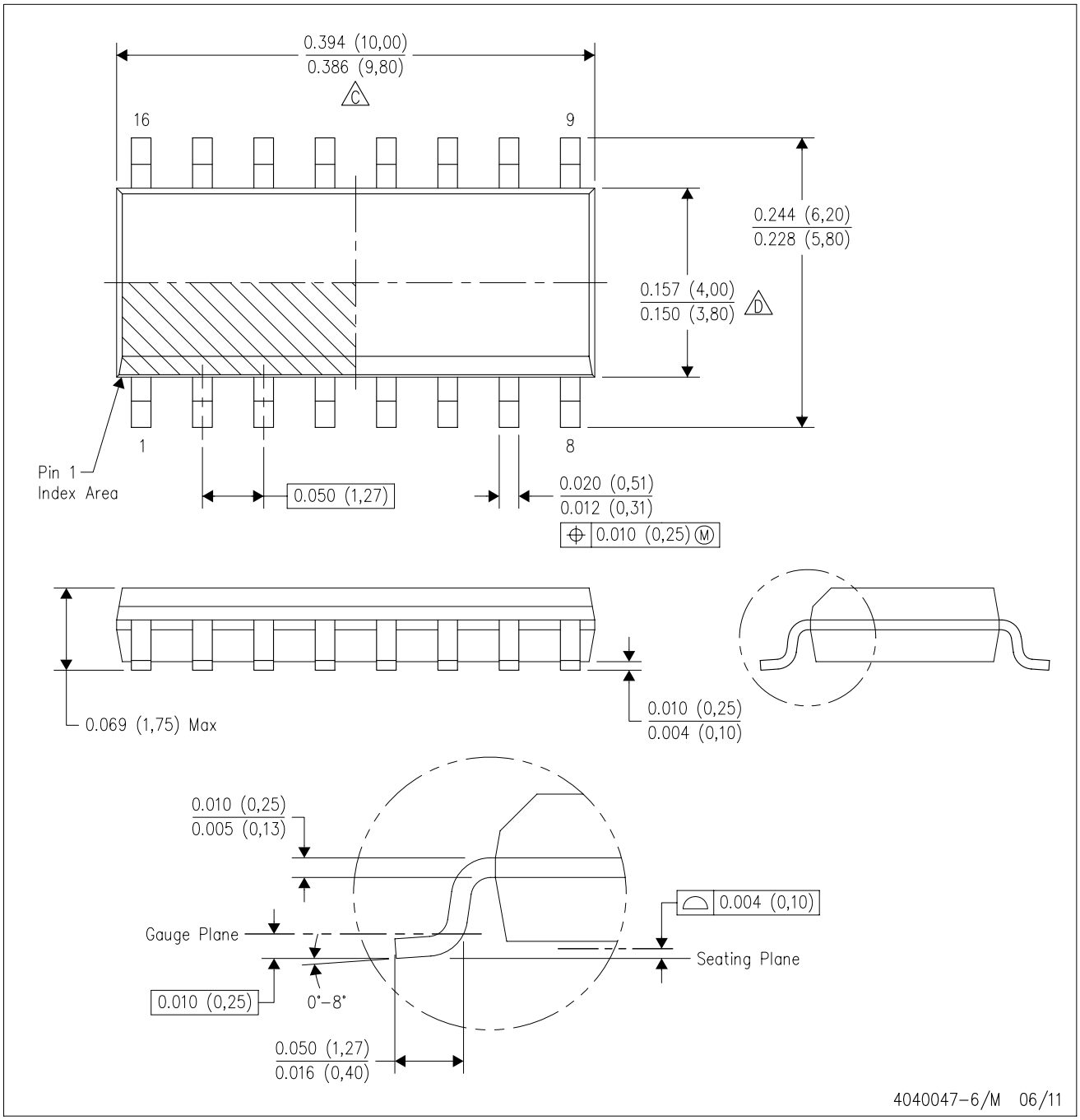

NOTES:
A. All linear dimensions are in inches (millimeters).
B. This drawing is subject to change without notice.
C. Body length does not include mold flash, protrusions, or gate burrs. Mold flash, protrusions, or gate burrs shall not exceed 0.006 (0,15) each side.
D. Body width does not include interlead flash. Interlead flash shall not exceed 0.017 (0,43) each side.
E. Reference JEDEC MS–012 variation AC.

GENERIC PACKAGE VIEW

DW 16

SOIC - 2.65 mm max height

7.5 x 10.3, 1.27 mm pitch

SMALL OUTLINE INTEGRATED CIRCUIT

This image is a representation of the package family, actual package may vary.
Refer to the product data sheet for package details.

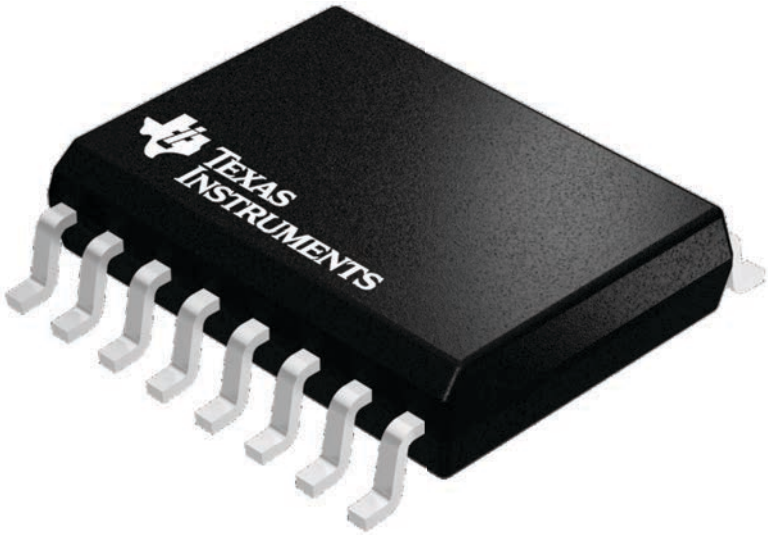

4224780/A

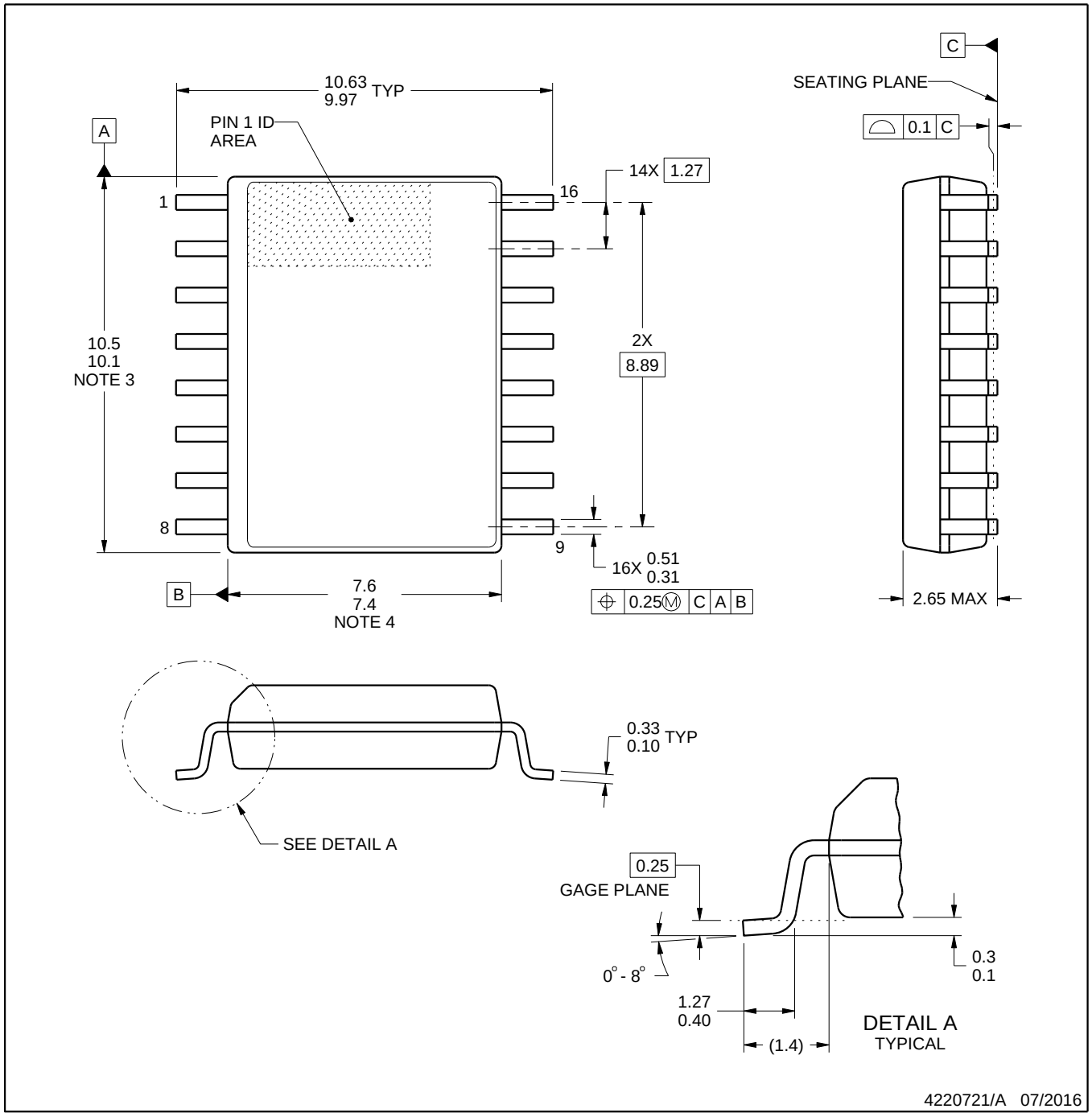

NOTES:

1. All linear dimensions are in millimeters. Dimensions in parenthesis are for reference only. Dimensioning and tolerancing per ASME Y14.5M.
2. This drawing is subject to change without notice.
3. This dimension does not include mold flash, protrusions, or gate burrs. Mold flash, protrusions, or gate burrs shall not exceed 0.15 mm, per side.
4. This dimension does not include interlead flash. Interlead flash shall not exceed 0.25 mm, per side.
5. Reference JEDEC registration MS-013.

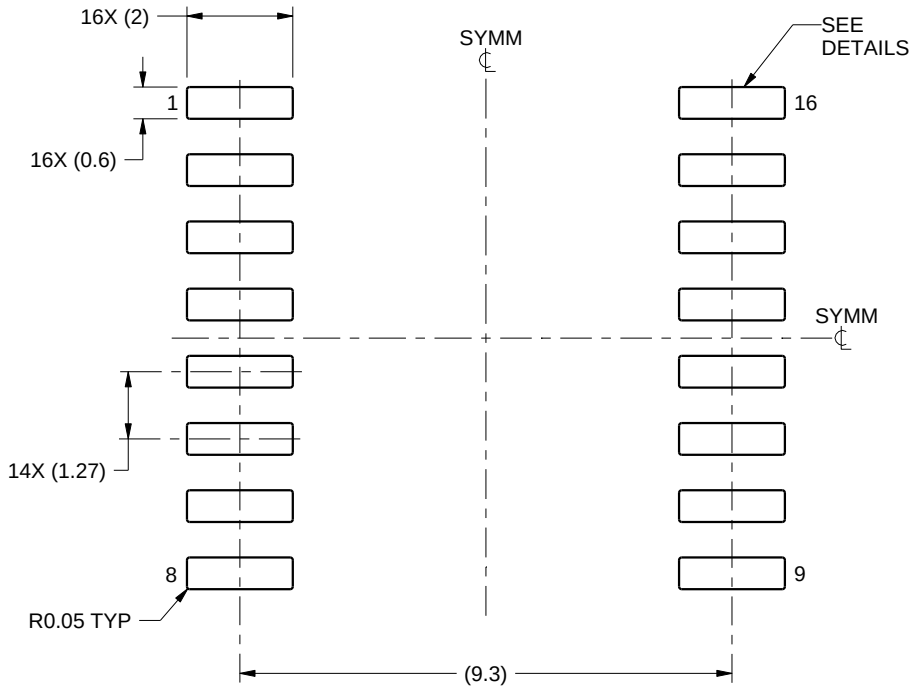

LAND PATTERN EXAMPLE
SCALE:7X

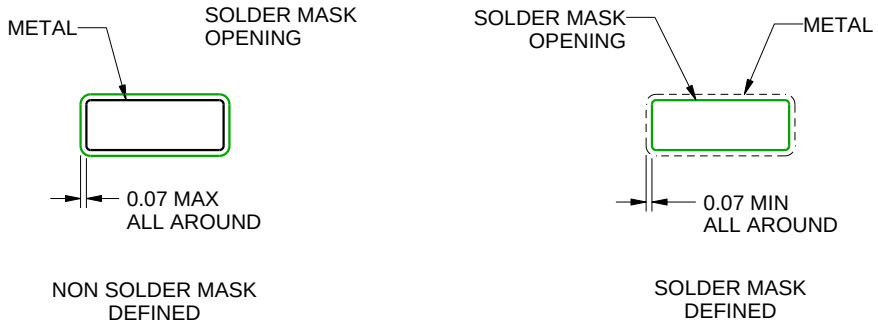

SOLDER MASK DETAILS

4220721/A 07/2016

NOTES: (continued)

6. Publication IPC-7351 may have alternate designs.
7. Solder mask tolerances between and around signal pads can vary based on board fabrication site.

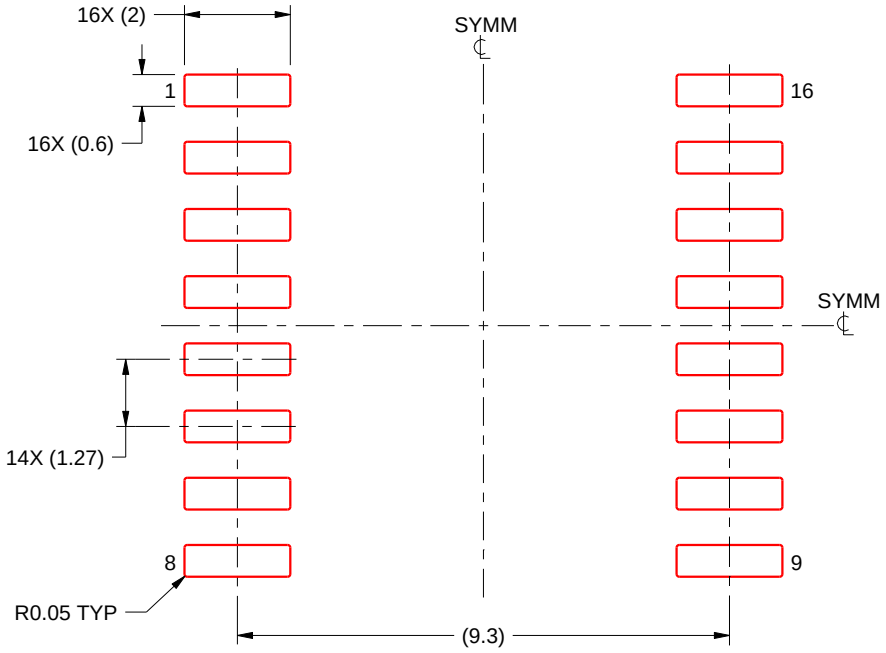

SOLDER PASTE EXAMPLE
BASED ON 0.125 mm THICK STENCIL
SCALE:7X

4220721/A 07/2016

NOTES: (continued)

8. Laser cutting apertures with trapezoidal walls and rounded corners may offer better paste release. IPC-7525 may have alternate design recommendations.
9. Board assembly site may have different recommendations for stencil design.

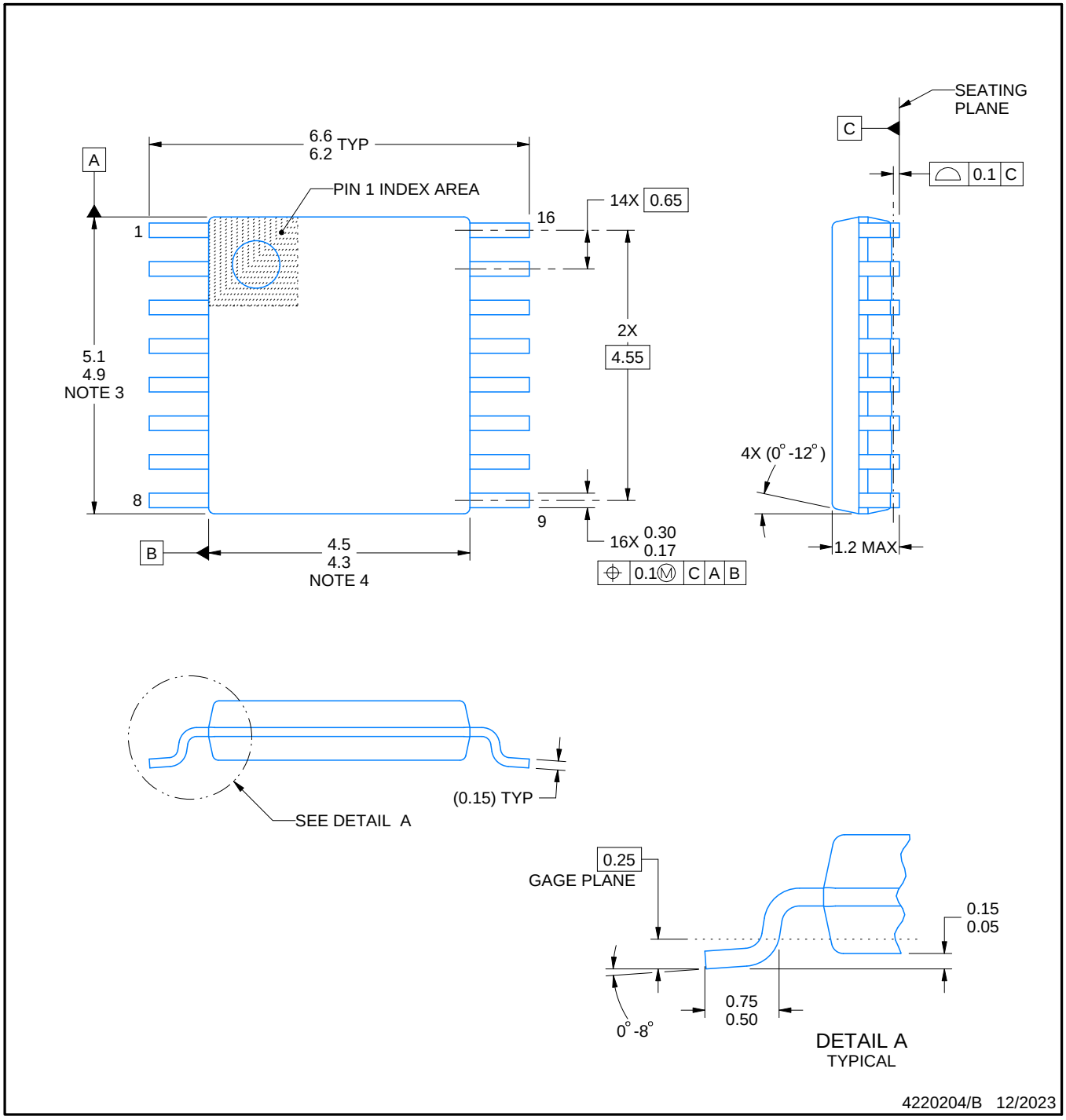

NOTES:

1. All linear dimensions are in millimeters. Any dimensions in parenthesis are for reference only. Dimensioning and tolerancing per ASME Y14.5M.
2. This drawing is subject to change without notice.
3. This dimension does not include mold flash, protrusions, or gate burrs. Mold flash, protrusions, or gate burrs shall not exceed 0.15 mm per side.
4. This dimension does not include interlead flash. Interlead flash shall not exceed 0.25 mm per side.
5. Reference JEDEC registration MO-153.

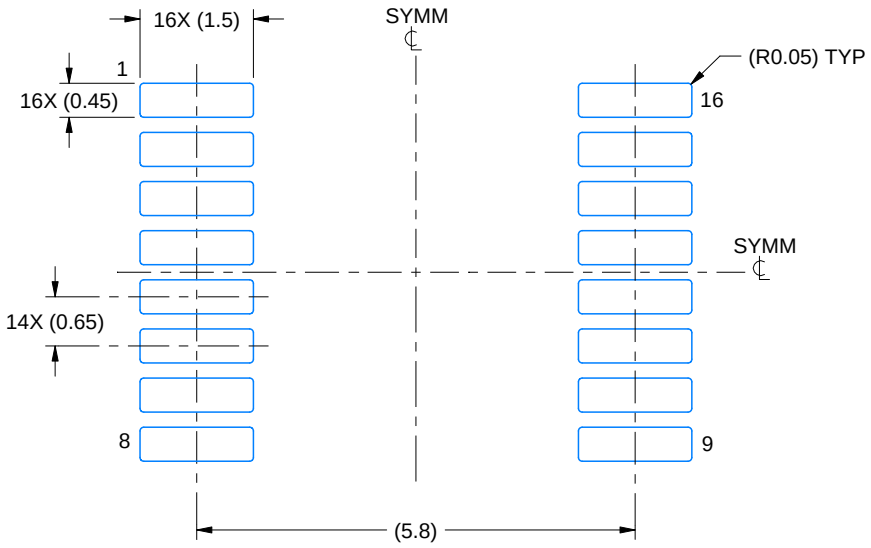

LAND PATTERN EXAMPLE
EXPOSED METAL SHOWN
SCALE: 10X

NON-SOLDER MASK DEFINED (PREFERRED)

SOLDER MASK DEFINED

SOLDER MASK DETAILS

4220204/B 12/2023

NOTES: (continued)

6. Publication IPC-7351 may have alternate designs.
7. Solder mask tolerances between and around signal pads can vary based on board fabrication site.

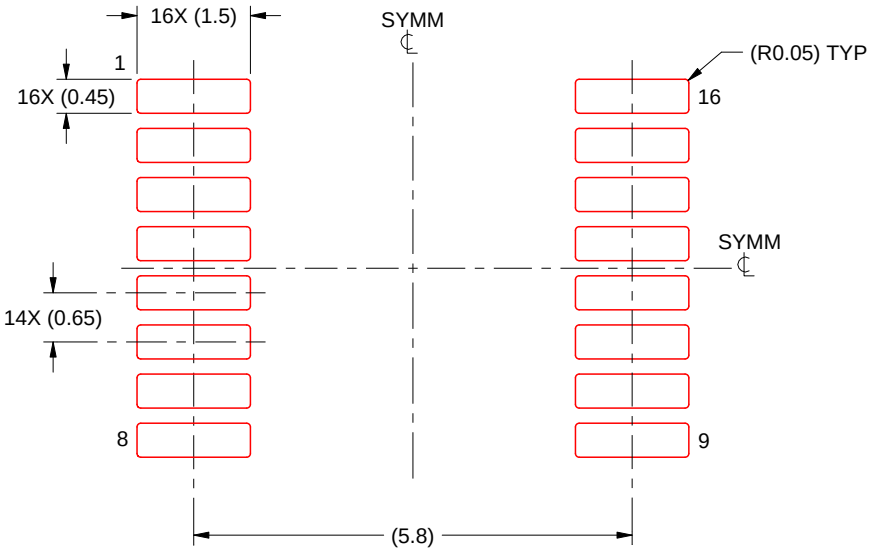

SOLDER PASTE EXAMPLE
BASED ON 0.125 mm THICK STENCIL
SCALE: 10X

4220204/B 12/2023

NOTES: (continued)

8. Laser cutting apertures with trapezoidal walls and rounded corners may offer better paste release. IPC-7525 may have alternate design recommendations.
9. Board assembly site may have different recommendations for stencil design.

N (R–PDIP–T**) PLASTIC DUAL–IN–LINE PACKAGE

16 PINS SHOWN

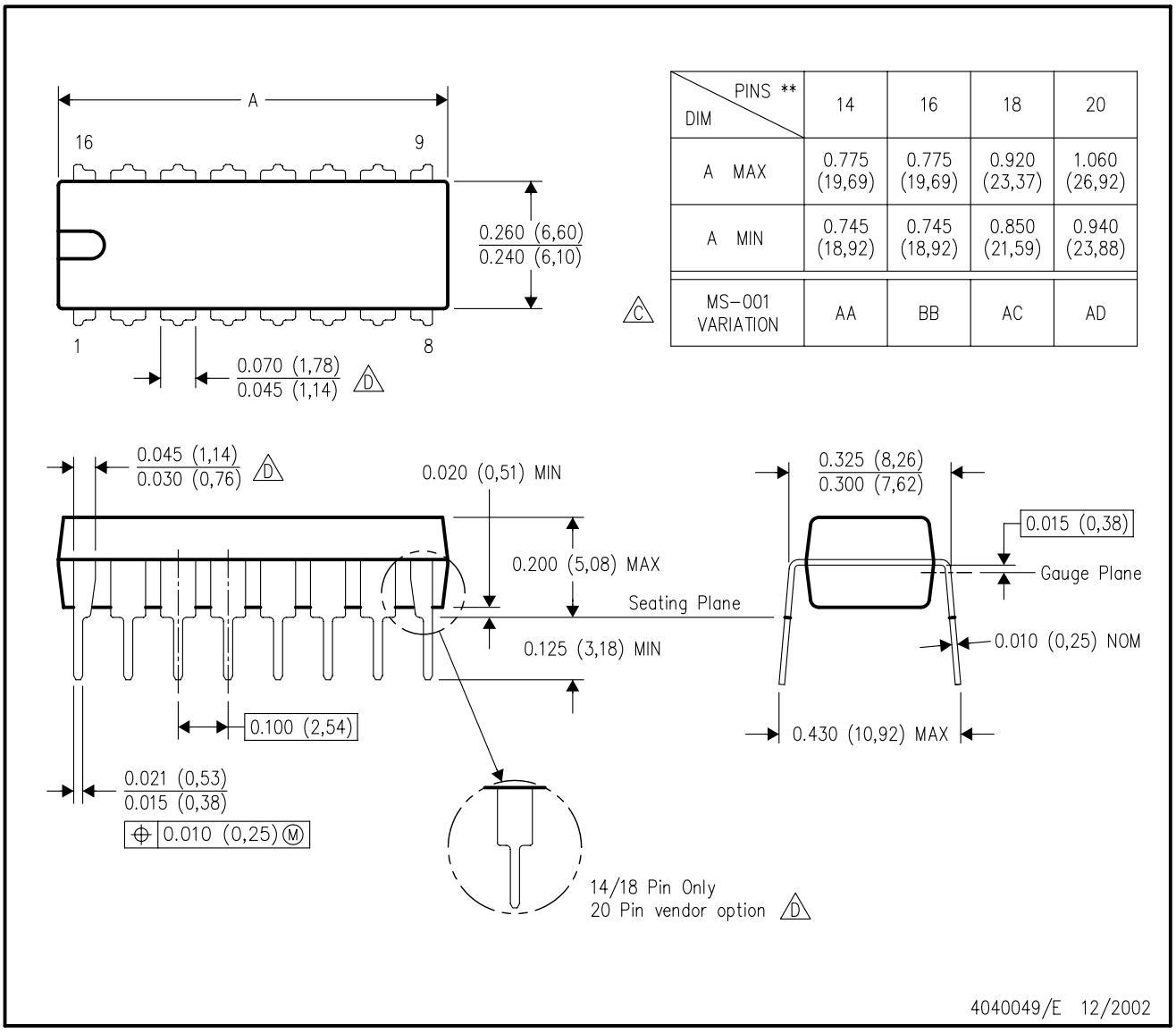

DIM \ PINS **	14	16	18	20
A MAX	0.775 (19,69)	0.775 (19,69)	0.920 (23,37)	1.060 (26,92)
A MIN	0.745 (18,92)	0.745 (18,92)	0.850 (21,59)	0.940 (23,88)
MS–001 VARIATION (C)	AA	BB	AC	AD

NOTES:
A. All linear dimensions are in inches (millimeters).
B. This drawing is subject to change without notice.
C. Falls within JEDEC MS–001, except 18 and 20 pin minimum body length (Dim A).
D. The 20 pin end lead shoulder width is a vendor option, either half or full width.

IMPORTANT NOTICE AND DISCLAIMER

TI PROVIDES TECHNICAL AND RELIABILITY DATA (INCLUDING DATASHEETS), DESIGN RESOURCES (INCLUDING REFERENCE DESIGNS), APPLICATION OR OTHER DESIGN ADVICE, WEB TOOLS, SAFETY INFORMATION, AND OTHER RESOURCES “AS IS” AND WITH ALL FAULTS, AND DISCLAIMS ALL WARRANTIES, EXPRESS AND IMPLIED, INCLUDING WITHOUT LIMITATION ANY IMPLIED WARRANTIES OF MERCHANTABILITY, FITNESS FOR A PARTICULAR PURPOSE OR NON-INFRINGEMENT OF THIRD PARTY INTELLECTUAL PROPERTY RIGHTS.

These resources are intended for skilled developers designing with TI products. You are solely responsible for (1) selecting the appropriate TI products for your application, (2) designing, validating and testing your application, and (3) ensuring your application meets applicable standards, and any other safety, security, regulatory or other requirements.

These resources are subject to change without notice. TI grants you permission to use these resources only for development of an application that uses the TI products described in the resource. Other reproduction and display of these resources is prohibited. No license is granted to any other TI intellectual property right or to any third party intellectual property right. TI disclaims responsibility for, and you fully indemnify TI and its representatives against any claims, damages, costs, losses, and liabilities arising out of your use of these resources.

TI’s products are provided subject to TI’s Terms of Sale, TI’s General Quality Guidelines, or other applicable terms available either on ti.com or provided in conjunction with such TI products. TI’s provision of these resources does not expand or otherwise alter TI’s applicable warranties or warranty disclaimers for TI products. Unless TI explicitly designates a product as custom or customer-specified, TI products are standard, catalog, general purpose devices.

TI objects to and rejects any additional or different terms you may propose.

Copyright © 2026, Texas Instruments Incorporated

Last updated 10/2025