3-V TO 5.5-V MULTICHANNEL RS-232 1-MBit/s LINE DRIVER/RECEIVER

Check for Samples: TRS3237E

FEATURES

- **Meets or Exceeds the Requirements of TIA/EIA-232-F and ITU v.28 Standards**
- **Operates With 3-V to 5.5-V V_{CC} Supply**
- **Operates From 250 kbits/s to 1 Mbit/s**
- **Low Standby Current . . . 1 μA Typical**
- **External Capacitors . . . 4 × 0.1 μF**
- **Accepts 5-V Logic Input With 3.3-V Supply**
- **Designed to Be Interchangeable With Industry Standard '3237E Devices**
- **Latch-Up Performance Exceeds 100 mA Per JESD 78, Class II**
- **ESD Protection for RS-232 I/O Pins**
  - **±15 kV – Human-Body Model (HBM)**
  - **±8 kV – IEC61000-4-2, Contact Discharge**
  - **±15 kV – IEC61000-4-2, Air-Gap Discharge**

APPLICATIONS

- **Battery-Powered, Hand-Held, and Portable Equipment**
- **PDAs and Palmtop PCs**
- **Notebooks, Sub-Notebooks, and Laptops**
- **Digital Cameras**
- **Mobile Phones and Wireless Devices**

DB, DW, OR PW PACKAGE
(TOP VIEW)

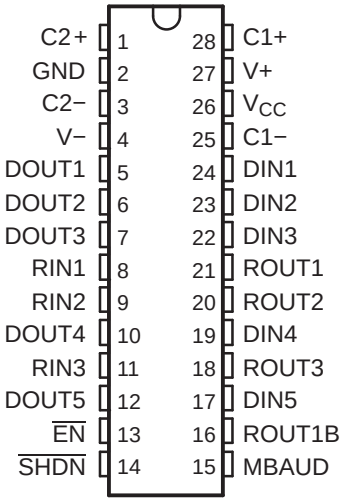

RHB PACKAGE
(TOP VIEW)

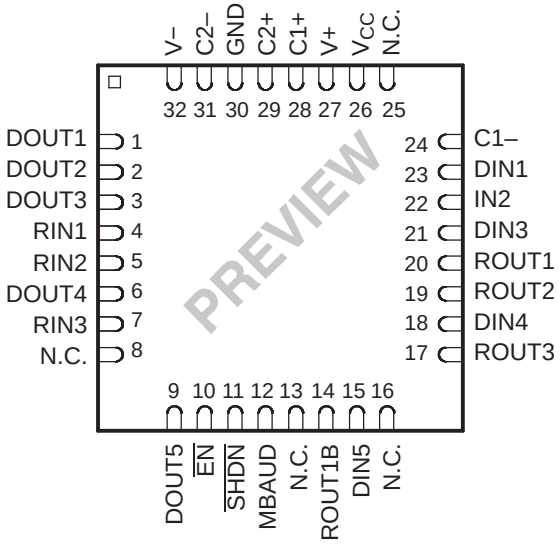

N.C.– Not internally connected

DESCRIPTION/ORDERING INFORMATION

The TRS3237E consists of five line drivers, three line receivers, and a dual charge-pump circuit with ±15-kV ESD protection pin to pin (serial-port connection pins, including GND). The device meets the requirements of TIA/EIA-232-F and provides the electrical interface between an asynchronous communication controller and the serial-port connector. The charge pump and four small external capacitors allow operation from a single 3-V to 5.5-V supply. This device operates at data signaling rates of 250 kbit/s in normal operating mode (MBAUD = GND) and 1Mbit/s when MBAUD = V_{CC}. The driver output slew rate is a maximum of 30 V/μs.

Please be aware that an important notice concerning availability, standard warranty, and use in critical applications of Texas Instruments semiconductor products and disclaimers thereto appears at the end of this data sheet.

PRODUCTION DATA information is current as of publication date. Products conform to specifications per the terms of the Texas Instruments standard warranty. Production processing does not necessarily include testing of all parameters.

Copyright © 2007–2010, Texas Instruments Incorporated

The TRS3237E transmitters are disabled and the outputs are forced into high-impedance state when the device is in shutdown mode ($\overline{SHDN}$ = GND) and the supply current falls to less than 1 μA. Also, during shutdown, the onboard charge pump is disabled; V+ is lowered to V_{CC}, and V– is raised toward GND. Receiver outputs also can be placed in the high-impedance state by setting enable ($\overline{EN}$) high. ROUT1B remains active all the time, regardless of the $\overline{EN}$ and $\overline{SHDN}$ condition.

The TRS3237EC is characterized for operation from 0°C to 70°C. The TRS3237EI is characterized for operation from –40°C to 85°C.

Table 1. ORDERING INFORMATION(1)

T_A	PACKAGE(2)		ORDERABLE PART NUMBER	TOP-SIDE MARKING
0°C to 70°C	SSOP – DB	Reel of 2000	TRS3237ECDBR	TRS3237EC
	SOIC – DW	Reel of 2000	TRS3237ECDWR	TRS3237EC
	TSSOP – PW	Reel of 2000	TRS3237ECPWR	RS37EC
	QFN – RHB	Reel of 2000	TRS3237ECRHBR	PREVIEW
–40°C to 85°C	SSOP – DB	Reel of 2000	TRS3237EIDBR	TRS3237EI
	SOIC – DW	Reel of 2000	TRS3237EIDWR	TRS3237EI
	TSSOP – PW	Reel of 2000	TRS3237EIPWR	RS37EI
	QFN – RHB	Reel of 2000	TRS3237EIRHBR	PREVIEW

(1) For the most current package and ordering information, see the Package Option Addendum at the end of this document, or see the TI web site at www.ti.com.
(2) Package drawings, thermal data, and symbolization are available at www.ti.com/packaging.

Table 2. FUNCTION TABLE

INPUTS		OUTPUTS		
$\overline{SHDN}$	$\overline{EN}$	DOUT	ROUT	ROUT1B
0	0	Z(1)	Active	Active
0	1	Z(1)	Z(1)	Active
1	0	Active	Active	Active
1	1	Active	Z(1)	Active

(1) Z = high impedance (off)

Copyright © 2007–2010, Texas Instruments Incorporated

LOGIC DIAGRAM (POSITIVE LOGIC)

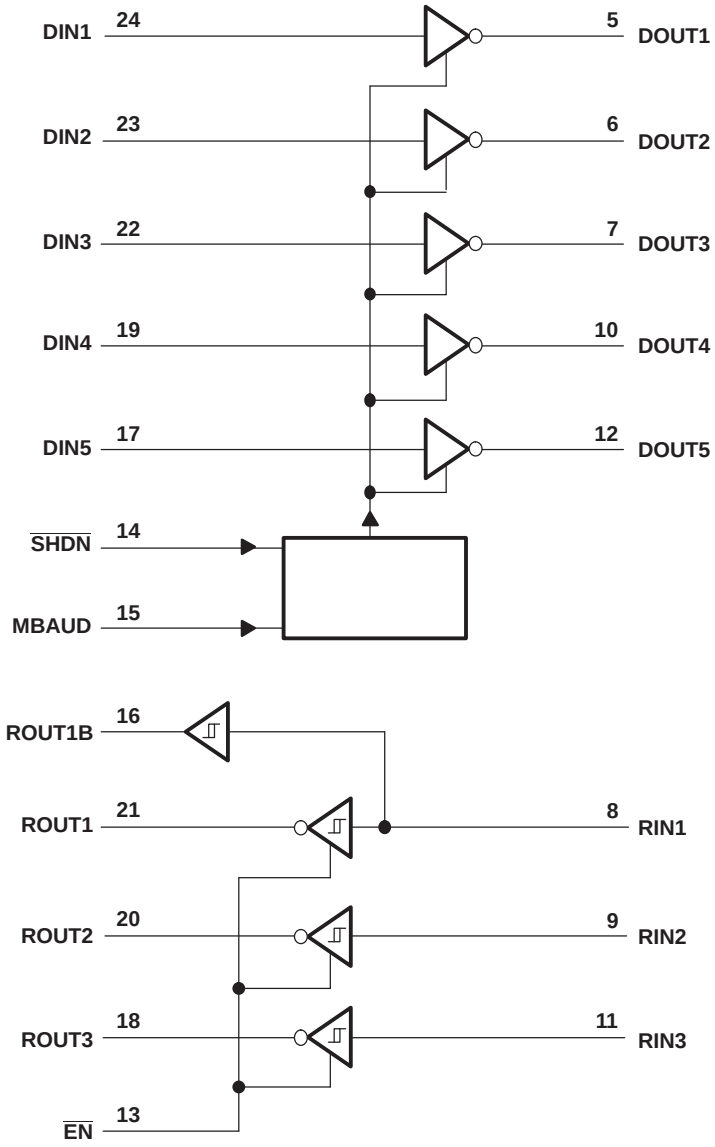

ABSOLUTE MAXIMUM RATINGS(1)

over operating free-air temperature range (unless otherwise noted)

			MIN	MAX	UNIT
V_{CC}	Supply voltage range(2)		–0.3	6	V
V+	Positive-output supply voltage range(2)		–0.3	7	V
V–	Negative-output supply voltage range(2)		0.3	–7	V
V+ – V–	Supply voltage difference(2)			13	V
V_I	Input voltage range	Driver ($\overline{SHDN}$, MBAUD, $\overline{EN}$)	–0.3	6	V
		Receiver	–25	25	
V_O	Output voltage range	Driver	–13.2	13.2	V
		Receiver	–0.3	V_{CC} + 0.3	
	Short-circuit duration	DOUT to GND	Unlimited		
θ_{JA}	Package thermal impedance(3)			62	°C/W
T_{stg}	Storage temperature range		–65	150	°C

(1) Stresses beyond those listed under "absolute maximum ratings" may cause permanent damage to the device. These are stress ratings only, and functional operation of the device at these or any other conditions beyond those indicated under "recommended operating conditions" is not implied. Exposure to absolute-maximum-rated conditions for extended periods may affect device reliability.
(2) All voltages are with respect to network GND.
(3) The package thermal impedance is calculated in accordance with JESD 51-7.

RECOMMENDED OPERATING CONDITIONS(1)

See Figure 5

				MIN	NOM	MAX	UNIT
	Supply voltage		V_{CC} = 3.3 V	3	3.3	3.6	V
			V_{CC} = 5 V	4.5	5	5.5	
V_{IH}	Driver and control high-level input voltage	DIN, $\overline{SHDN}$, MBAUD, $\overline{EN}$	V_{CC} = 3.3 V	2		5.5	V
			V_{CC} = 5 V	2.4		5.5	
V_{IL}	Driver and control low-level input voltage	DIN, $\overline{SHDN}$, MBAUD, $\overline{EN}$		0		0.8	V
V_I	Receiver input voltage			–25		25	V
T_A	Operating free-air temperature		TRS3237EC	0		70	°C
			TRS3237EI	–40		85	

(1) Test conditions are C1–C4 = 0.1 μF at V_{CC} = 3 V to 5 V.

ELECTRICAL CHARACTERISTICS(1)

over recommended ranges of supply voltage and operating free-air temperature (unless otherwise noted) (see Figure 5)

PARAMETER			TEST CONDITIONS	MIN	TYP(2)	MAX	UNIT
I_I	Input leakage current	DIN, $\overline{SHDN}$, MBAUD, $\overline{EN}$			9	18	μA
I_{CC}	Supply current (T_A = 25°C)		No load, $\overline{SHDN}$ = V_{CC}		0.5	2	mA
		Shutdown supply current	$\overline{SHDN}$ = GND		1	10	μA
			$\overline{SHDN}$ = RIN = GND, DIN = GND or V_{CC}		10	300	nA

(1) Test conditions are C1–C4 = 0.1 μF at V_{CC} = 3 V to 5 V.
(2) All typical values are at V_{CC} = 3.3 V or V_{CC} = 5 V, and T_A = 25°C.

Copyright © 2007–2010, Texas Instruments Incorporated

DRIVER SECTION ELECTRICAL CHARACTERISTICS(1)

over recommended ranges of supply voltage and operating free-air temperature (unless otherwise noted) (see Figure 5)

PARAMETER		TEST CONDITIONS		MIN	TYP(2)	MAX	UNIT
V_{OH}	High-level output voltage	DOUT at R_L = 3 kΩ to GND,	DIN = GND	5	5.4		V
V_{OL}	Low-level output voltage	DOUT at R_L = 3 kΩ to GND,	DIN = V_{CC}	–5	–5.4		V
I_{IH}	High-level input current	V_I = V_{CC}			±0.01	±1	μA
I_{IL}	Low-level input current	V_I at GND			±0.01	±1	μA
I_{OS}	Short-circuit output current(3)	V_{CC} = 3.6 V or 3.3 V,	V_O = 0 V			±60	mA
r_o	Output resistance	V_{CC}, V_+, and V_- = 0 V,	V_O = ±2 V	300	50k		Ω

(1) Test conditions are C1–C4 = 0.1 μF at V_{CC} = 3 V to 5 V.
(2) All typical values are at V_{CC} = 3.3 V or V_{CC} = 5 V, and T_A = 25°C.
(3) Short-circuit durations should be controlled to prevent exceeding the device absolute power-dissipation ratings, and not more than one output should be shorted at a time.

DRIVER SECTION SWITCHING CHARACTERISTICS(1)

over recommended ranges of supply voltage and operating free-air temperature (unless otherwise noted) (see Figure 5)

PARAMETER		TEST CONDITIONS			MIN	TYP(2)	MAX	UNIT
Maximum data rate		C_L = 1000 pF, MBAUD = GND	R_L = 3 kΩ, 1 DIN switching, See Figure 1		250			kbit/s
		C_L = 1000 pF, V_{CC} = 4.5 V to 5.5 V, MBAUD = V_{CC}			1000			
		C_L = 250 pF, V_{CC} = 3 V to 4.5 V, MBAUD = V_{CC}			1000			
$t_{sk(p)}$	Pulse skew(3)	C_L = 150 pF to 2500 pF, R_L = 3 kΩ to 7 kΩ, MBAUD = V_{CC} or GND, See Figure 2				100		ns
SR(tr)	Slew rate, transition region (see Figure 1)	V_{CC} = 3.3 V, R_L = 3 kΩ to 7 kΩ, T_A = 25°C	C_L = 150 pF to 1000 pF	MBAUD = GND	6		30	V/μs
				MBAUD = V_{CC}	24		150	
			C_L = 150 pF to 2500 pF,	MBAUD = GND	4		30	

(1) Test conditions are C1–C4 = 0.1 μF at V_{CC} = 3 V to 5 V.
(2) All typical values are at V_{CC} = 3.3 V or V_{CC} = 5 V, and T_A = 25°C.
(3) Pulse skew is defined as $|t_{PLH} - t_{PHL}|$ of each channel of the same device.

Copyright © 2007–2010, Texas Instruments Incorporated

RECEIVER SECTION ELECTRICAL CHARACTERISTICS(1)

over recommended ranges of supply voltage and operating free-air temperature (unless otherwise noted) (see Figure 5)

PARAMETER		TEST CONDITIONS	MIN	TYP(2)	MAX	UNIT
V_{OH}	High-level output voltage	I_{OH} = –1 mA	V_{CC} – 0.6	V_{CC} – 0.1		V
V_{OL}	Low-level output voltage	I_{OL} = 1 mA			0.4	V
V_{IT+}	Positive-going input threshold voltage	V_{CC} = 3.3 V		1.5	2.4	V
		V_{CC} = 5 V		2	2.4	
$V_{IT–}$	Negative-going input threshold voltage	V_{CC} = 3.3 V	0.6	1.1		V
		V_{CC} = 5 V	0.8	1.5		
V_{hys}	Input hysteresis ($V_{IT+} – V_{IT–}$)			0.5		V
I_{oz}	Output leakage current	$\overline{EN}$ = V_{CC}		±0.05	±10	µA
r_i	Input resistance	V_I = ±3 V to ±25 V	3	5	7	kΩ

(1) Test conditions are C1–C4 = 0.1 mF at V_{CC} = 3 V to.5 V.
(2) All typical values are at V_{CC} = 3.3 V or V_{CC} = 5 V, and T_A = 25°C.

RECEIVER SECTION SWITCHING CHARACTERISTICS(1)

over recommended ranges of supply voltage and operating free-air temperature (unless otherwise noted)

PARAMETER		TEST CONDITIONS	TYP(2)	UNIT
t_{PLH}	Propagation delay time, low- to high-level output	C_L = 150 pF, See Figure 3	150	ns
t_{PHL}	Propagation delay time, high- to low-level output	C_L = 150 pF, See Figure 3	150	ns
t_{en}	Output enable time	C_L = 150 pF, R_L = 3 kΩ, See Figure 4	2.6	µs
t_{dis}	Output disable time	C_L = 150 pF, R_L = 3 kΩ, See Figure 4	2.4	µs
$t_{sk(p)}$	Pulse skew(3)	See Figure 3	50	ns

(1) Test conditions are C1–C4 = 0.1 µF at V_{CC} = 3 V to 5 V.
(2) All typical values are at V_{CC} = 3.3 V or V_{CC} = 5 V, and T_A = 25°C.
(3) Pulse skew is defined as $|t_{PLH} – t_{PHL}|$ of each channel of the same device.

ESD PROTECTION

PIN	TEST CONDITIONS	TYP	UNIT
DOUT, RIN	IEC61000-4-2, Contact Discharge	±8	kV
	IEC61000-4-2, Air-Gap Discharge	±15	

Copyright © 2007–2010, Texas Instruments Incorporated

PARAMETER MEASUREMENT INFORMATION

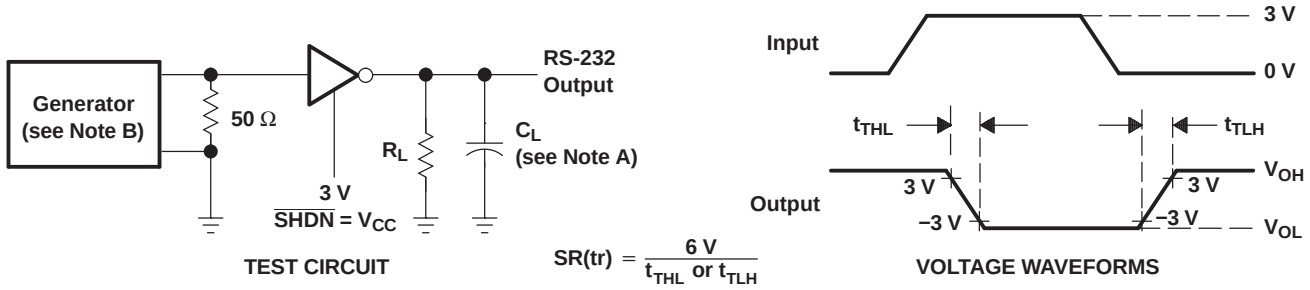

NOTES: A. C_L includes probe and jig capacitance.
B. The pulse generator has the following characteristics: PRR = 250 kbit/s, Z_O = 50 Ω, 50% duty cycle, $t_r \le 10$ ns, $t_f \le 10$ ns.

Figure 1. Driver Slew Rate

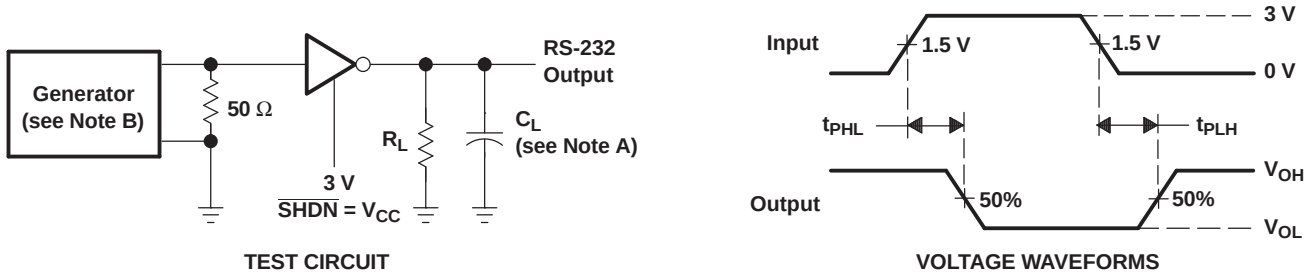

NOTES: A. C_L includes probe and jig capacitance.
B. The pulse generator has the following characteristics: PRR = 250 kbit/s, Z_O = 50 Ω, 50% duty cycle, $t_r \le 10$ ns, $t_f \le 10$ ns.

Figure 2. Driver Pulse Skew

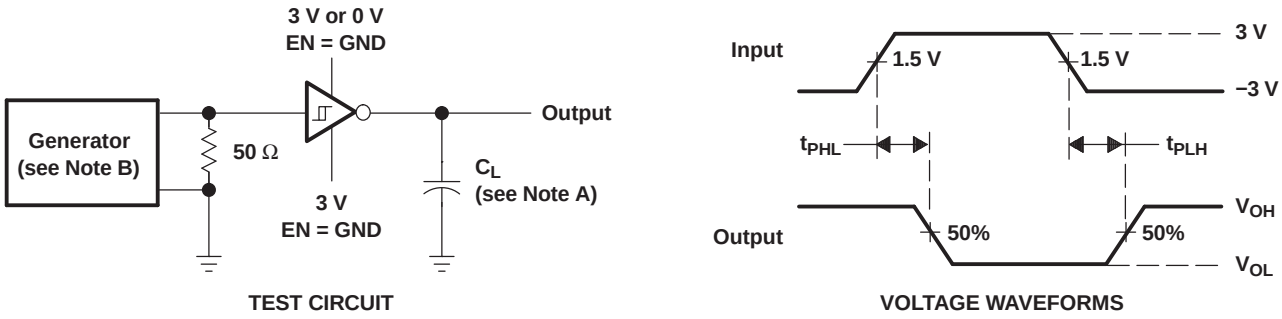

NOTES: A. C_L includes probe and jig capacitance.
B. The pulse generator has the following characteristics: Z_O = 50 Ω, 50% duty cycle, $t_r \le 10$ ns, $t_f \le 10$ ns.

Figure 3. Receiver Propagation Delay Times

Copyright © 2007–2010, Texas Instruments Incorporated

PARAMETER MEASUREMENT INFORMATION (continued)

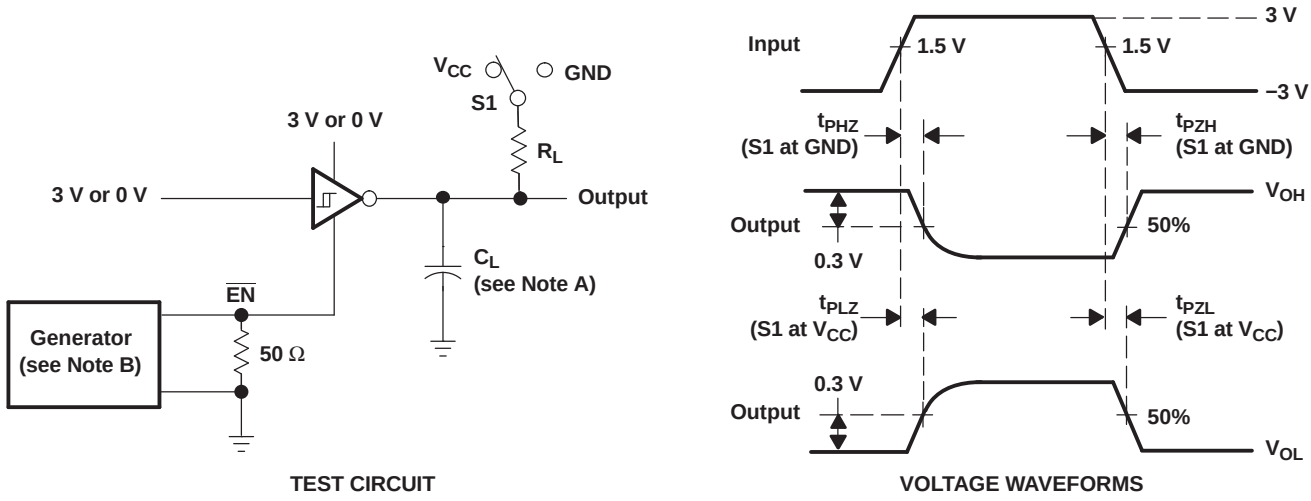

NOTES: A. C_L includes probe and jig capacitance.
B. The pulse generator has the following characteristics: Z_O = 50 Ω, 50% duty cycle, $t_r \le 10$ ns, $t_f \le 10$ ns.
C. t_{PLZ} and t_{PHZ} are the same as t_{dis}.
D. t_{PZL} and t_{PZH} are the same as t_{en}.

Figure 4. Receiver Enable and Disable Times

Copyright © 2007–2010, Texas Instruments Incorporated

APPLICATION INFORMATION

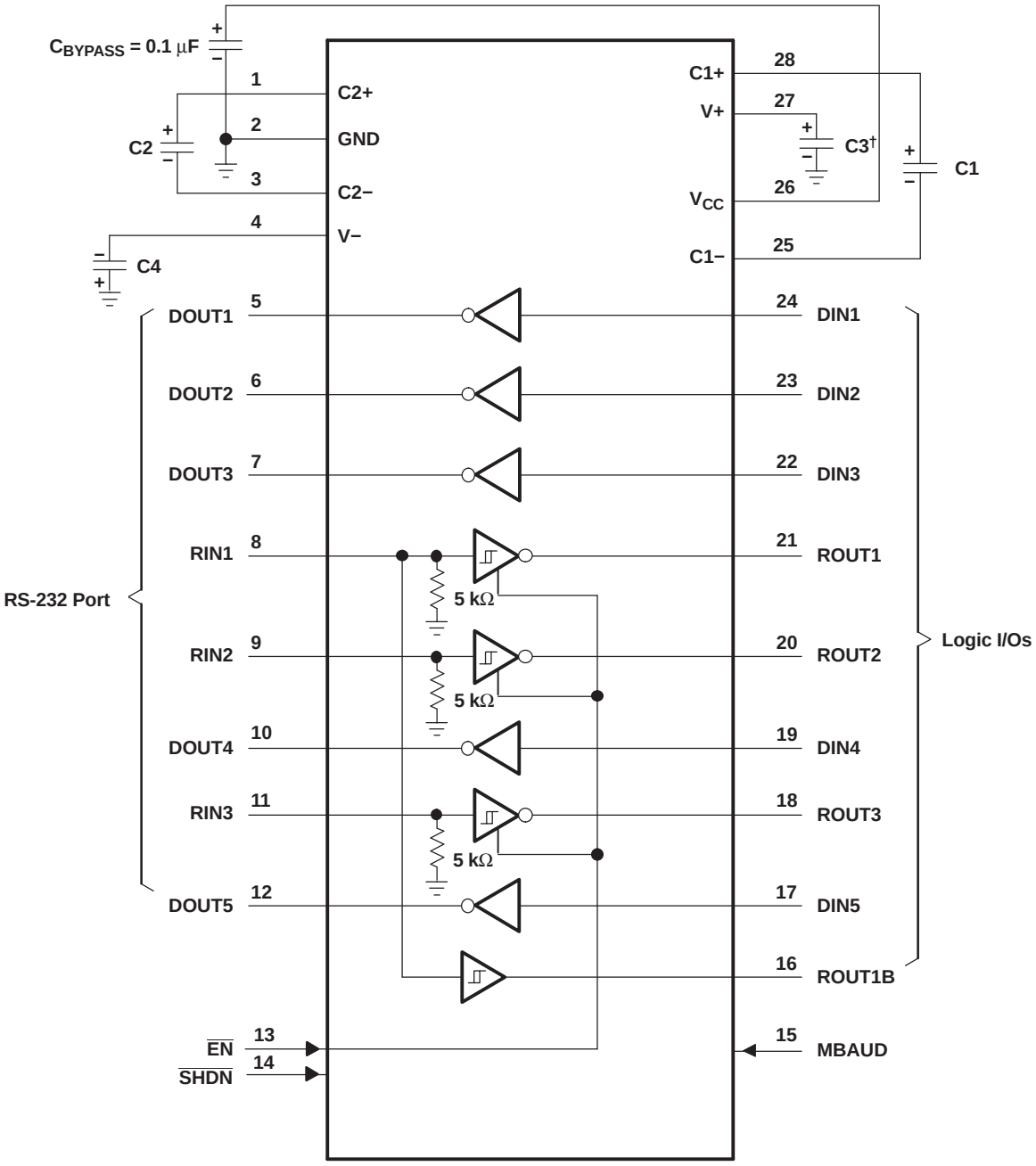

† C3 can be connected to V_{CC} or GND.

NOTES: A. Resistor values shown are nominal.
B. Nonpolarized ceramic capacitors are acceptable. If polarized tantalum or electrolytic capacitors are used, they should be connected as shown.

V_{CC} vs CAPACITOR VALUES

V_{CC}	C1	C2, C3, and C4
3.3 V ± 0.15 V	0.1 µF	0.1 µF
3.3 V ± 0.3 V	0.22 µF	0.22 µF
5 V ± 0.5 V	0.047 µF	0.33 µF
3 V to 5.5 V	0.22 µF	1 µF

Figure 5. Typical Operating Circuit and Capacitor Values

Copyright © 2007–2010, Texas Instruments Incorporated

PACKAGING INFORMATION

Orderable part number	Status (1)	Material type (2)	Package | Pins	Package qty | Carrier	RoHS (3)	Lead finish/ Ball material (4)	MSL rating/ Peak reflow (5)	Op temp (°C)	Part marking (6)
TRS3237ECDBR	Active	Production	SSOP (DB) | 28	2000 | LARGE T&R	Yes	NIPDAU	Level-1-260C-UNLIM	0 to 70	TRS3237EC
TRS3237ECDBR.A	Active	Production	SSOP (DB) | 28	2000 | LARGE T&R	Yes	NIPDAU	Level-1-260C-UNLIM	0 to 70	TRS3237EC
TRS3237ECPWR	Obsolete	Production	TSSOP (PW) | 28	-	-	Call TI	Call TI	0 to 70	RS37EC
TRS3237EIDB	Obsolete	Production	SSOP (DB) | 28	-	-	Call TI	Call TI	-40 to 85	TRS3237EI
TRS3237EIDBR	Active	Production	SSOP (DB) | 28	2000 | LARGE T&R	Yes	NIPDAU	Level-1-260C-UNLIM	-40 to 85	TRS3237EI
TRS3237EIDBR.A	Active	Production	SSOP (DB) | 28	2000 | LARGE T&R	Yes	NIPDAU	Level-1-260C-UNLIM	-40 to 85	TRS3237EI
TRS3237EIDBRG4	Active	Production	SSOP (DB) | 28	2000 | LARGE T&R	Yes	NIPDAU	Level-1-260C-UNLIM	-40 to 85	TRS3237EI
TRS3237EIDBRG4.A	Active	Production	SSOP (DB) | 28	2000 | LARGE T&R	Yes	NIPDAU	Level-1-260C-UNLIM	-40 to 85	TRS3237EI
TRS3237EIPWR	Active	Production	TSSOP (PW) | 28	2000 | LARGE T&R	Yes	NIPDAU	Level-1-260C-UNLIM	-40 to 85	RS37EI
TRS3237EIPWR.A	Active	Production	TSSOP (PW) | 28	2000 | LARGE T&R	Yes	NIPDAU	Level-1-260C-UNLIM	-40 to 85	RS37EI

(1) **Status:** For more details on status, see our product life cycle.

(2) **Material type:** When designated, preproduction parts are prototypes/experimental devices, and are not yet approved or released for full production. Testing and final process, including without limitation quality assurance, reliability performance testing, and/or process qualification, may not yet be complete, and this item is subject to further changes or possible discontinuation. If available for ordering, purchases will be subject to an additional waiver at checkout, and are intended for early internal evaluation purposes only. These items are sold without warranties of any kind.

(3) **RoHS values:** Yes, No, RoHS Exempt. See the TI RoHS Statement for additional information and value definition.

(4) **Lead finish/Ball material:** Parts may have multiple material finish options. Finish options are separated by a vertical ruled line. Lead finish/Ball material values may wrap to two lines if the finish value exceeds the maximum column width.

(5) **MSL rating/Peak reflow:** The moisture sensitivity level ratings and peak solder (reflow) temperatures. In the event that a part has multiple moisture sensitivity ratings, only the lowest level per JEDEC standards is shown. Refer to the shipping label for the actual reflow temperature that will be used to mount the part to the printed circuit board.

(6) **Part marking:** There may be an additional marking, which relates to the logo, the lot trace code information, or the environmental category of the part.

Multiple part markings will be inside parentheses. Only one part marking contained in parentheses and separated by a "~" will appear on a part. If a line is indented then it is a continuation of the previous line and the two combined represent the entire part marking for that device.

Important Information and Disclaimer: The information provided on this page represents TI's knowledge and belief as of the date that it is provided. TI bases its knowledge and belief on information provided by third parties, and makes no representation or warranty as to the accuracy of such information. Efforts are underway to better integrate information from third parties. TI has taken and continues to take reasonable steps to provide representative

and accurate information but may not have conducted destructive testing or chemical analysis on incoming materials and chemicals. TI and TI suppliers consider certain information to be proprietary, and thus CAS numbers and other limited information may not be available for release.

In no event shall TI's liability arising out of such information exceed the total purchase price of the TI part(s) at issue in this document sold by TI to Customer on an annual basis.

TAPE AND REEL INFORMATION

REEL DIMENSIONS

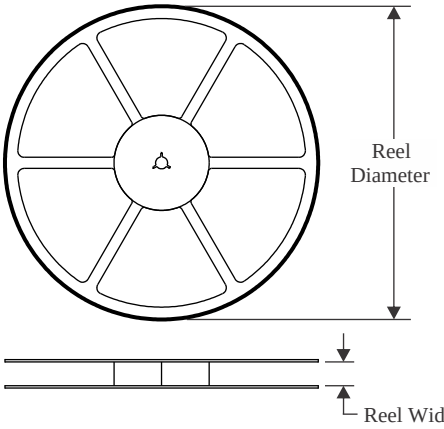

TAPE DIMENSIONS

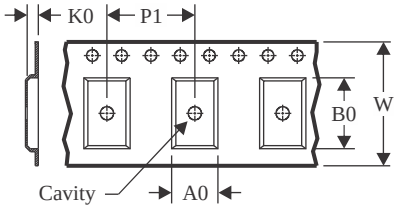

A0	Dimension designed to accommodate the component width
B0	Dimension designed to accommodate the component length
K0	Dimension designed to accommodate the component thickness
W	Overall width of the carrier tape
P1	Pitch between successive cavity centers

QUADRANT ASSIGNMENTS FOR PIN 1 ORIENTATION IN TAPE

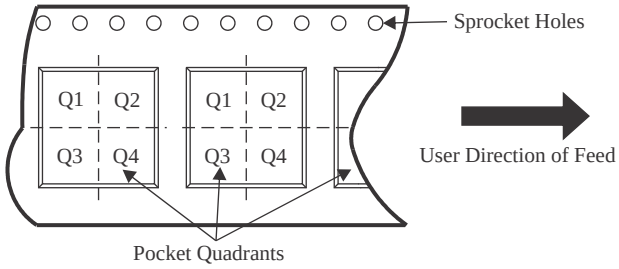

*All dimensions are nominal

Device	Package Type	Package Drawing	Pins	SPQ	Reel Diameter (mm)	Reel Width W1 (mm)	A0 (mm)	B0 (mm)	K0 (mm)	P1 (mm)	W (mm)	Pin1 Quadrant
TRS3237ECDBR	SSOP	DB	28	2000	330.0	16.4	8.45	10.55	2.5	12.0	16.2	Q1
TRS3237EIDBR	SSOP	DB	28	2000	330.0	16.4	8.45	10.55	2.5	12.0	16.2	Q1
TRS3237EIDBRG4	SSOP	DB	28	2000	330.0	16.4	8.45	10.55	2.5	12.0	16.2	Q1
TRS3237EIPWR	TSSOP	PW	28	2000	330.0	16.4	6.75	10.1	1.8	12.0	16.0	Q1

TAPE AND REEL BOX DIMENSIONS

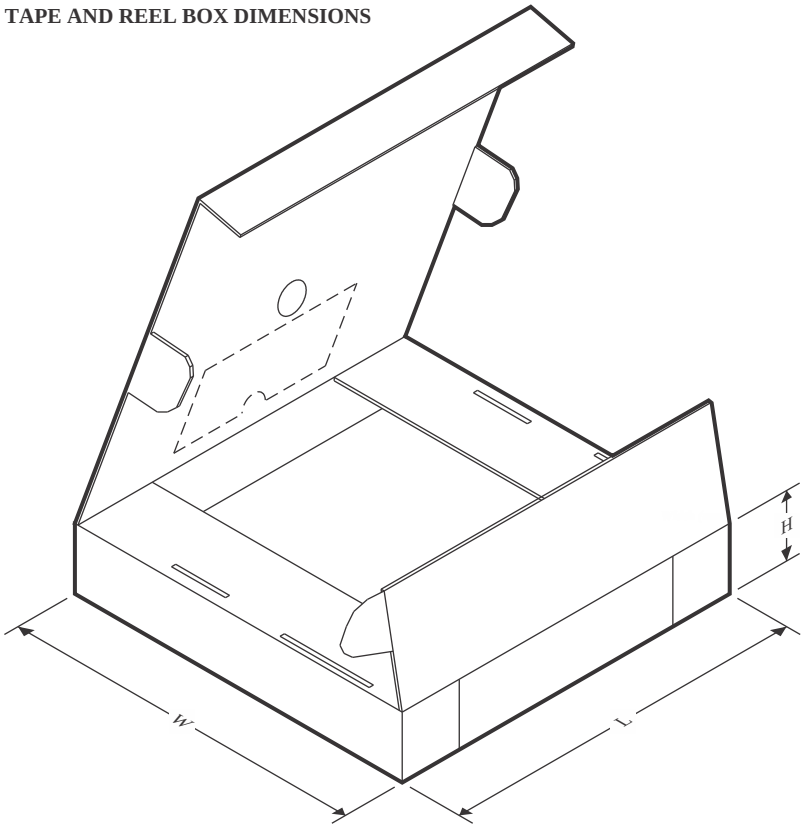

*All dimensions are nominal

Device	Package Type	Package Drawing	Pins	SPQ	Length (mm)	Width (mm)	Height (mm)
TRS3237ECDBR	SSOP	DB	28	2000	353.0	353.0	32.0
TRS3237EIDBR	SSOP	DB	28	2000	353.0	353.0	32.0
TRS3237EIDBRG4	SSOP	DB	28	2000	353.0	353.0	32.0
TRS3237EIPWR	TSSOP	PW	28	2000	353.0	353.0	32.0

PACKAGE OUTLINE

DB0028A

SSOP - 2 mm max height

SMALL OUTLINE PACKAGE

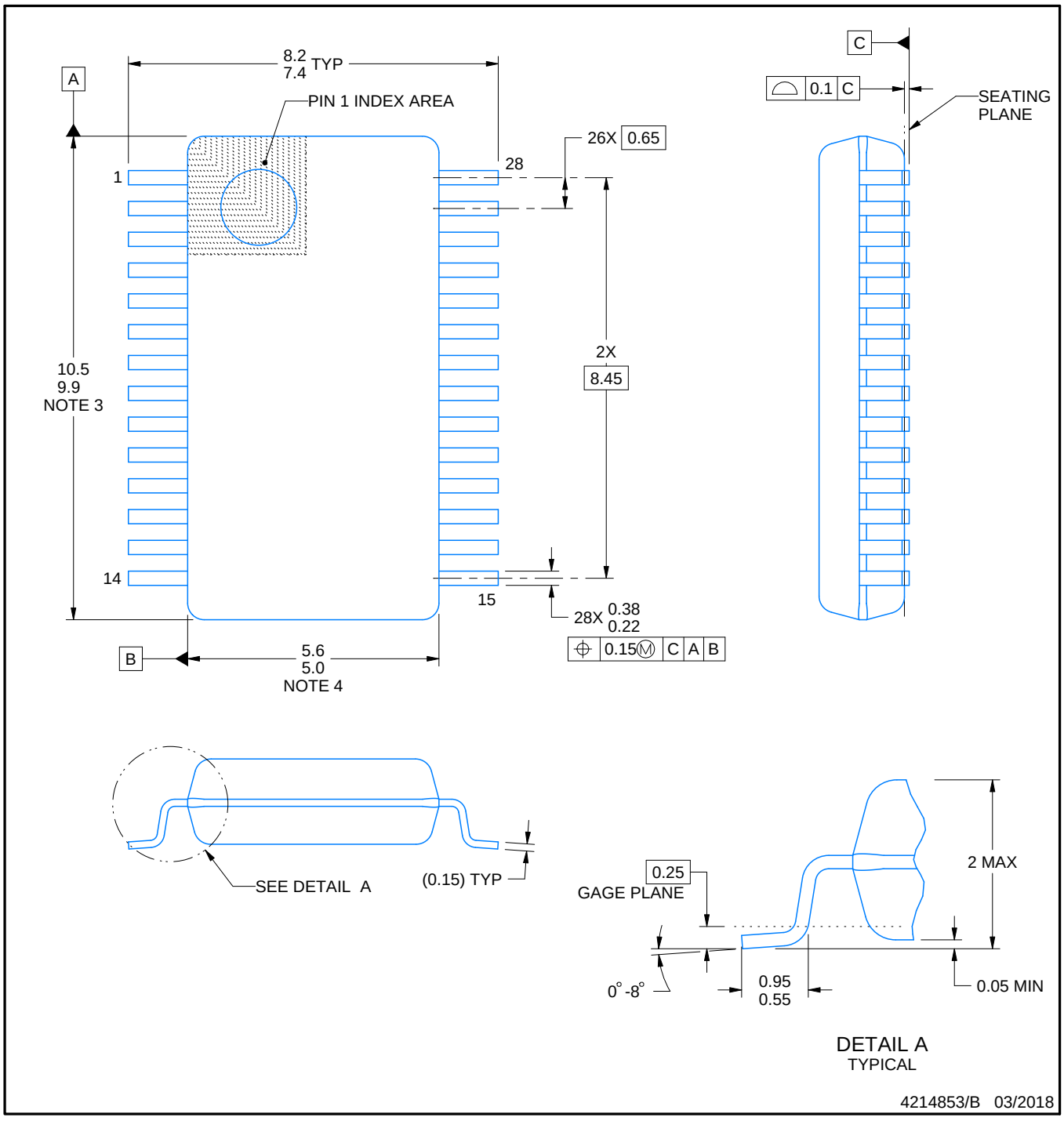

NOTES:

1. All linear dimensions are in millimeters. Any dimensions in parenthesis are for reference only. Dimensioning and tolerancing per ASME Y14.5M.
2. This drawing is subject to change without notice.
3. This dimension does not include mold flash, protrusions, or gate burrs. Mold flash, protrusions, or gate burrs shall not exceed 0.15 mm per side.
4. This dimension does not include interlead flash. Interlead flash shall not exceed 0.25 mm per side.
5. Reference JEDEC registration MO-150.

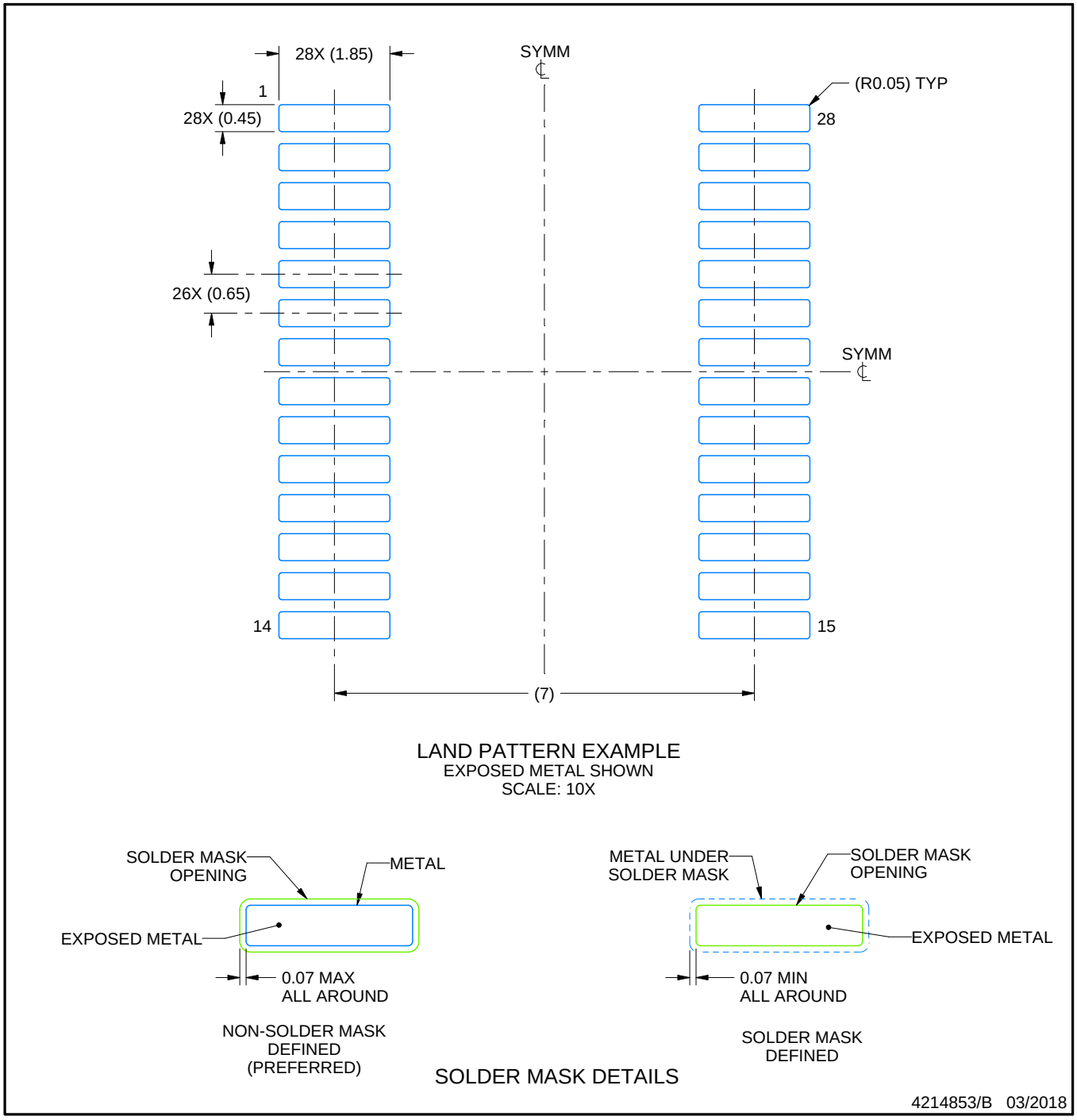

NOTES: (continued)

6. Publication IPC-7351 may have alternate designs.
7. Solder mask tolerances between and around signal pads can vary based on board fabrication site.

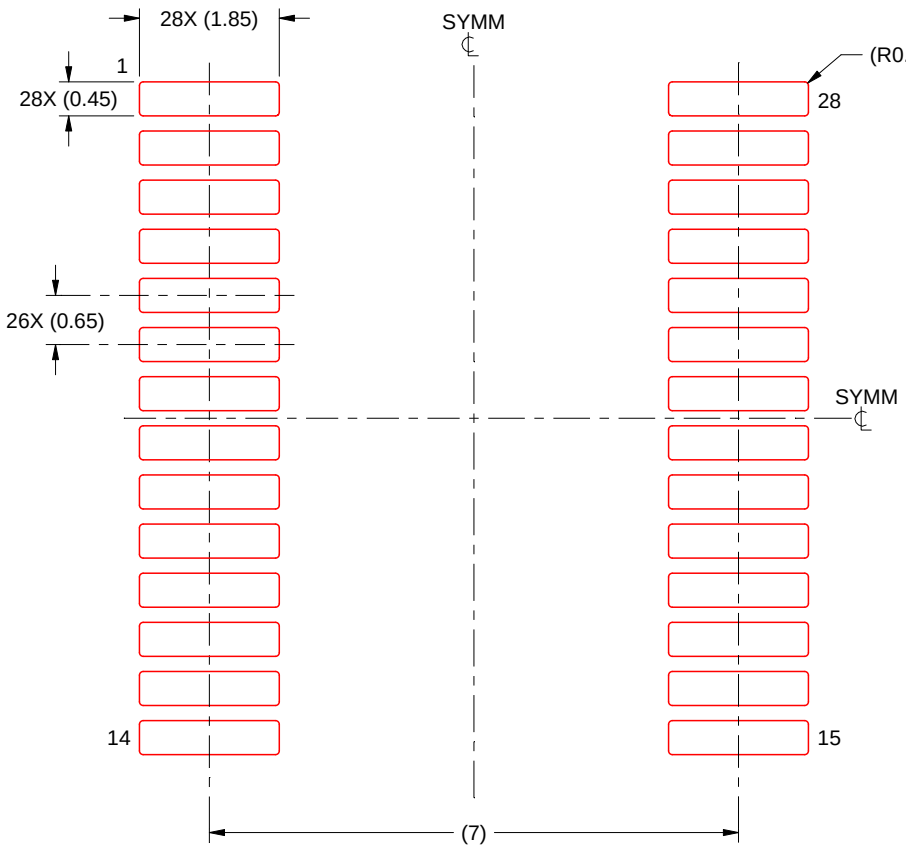

SOLDER PASTE EXAMPLE
BASED ON 0.125 mm THICK STENCIL
SCALE: 10X

4214853/B 03/2018

NOTES: (continued)

8. Laser cutting apertures with trapezoidal walls and rounded corners may offer better paste release. IPC-7525 may have alternate design recommendations.
9. Board assembly site may have different recommendations for stencil design.

PW (R–PDSO–G28) PLASTIC SMALL OUTLINE

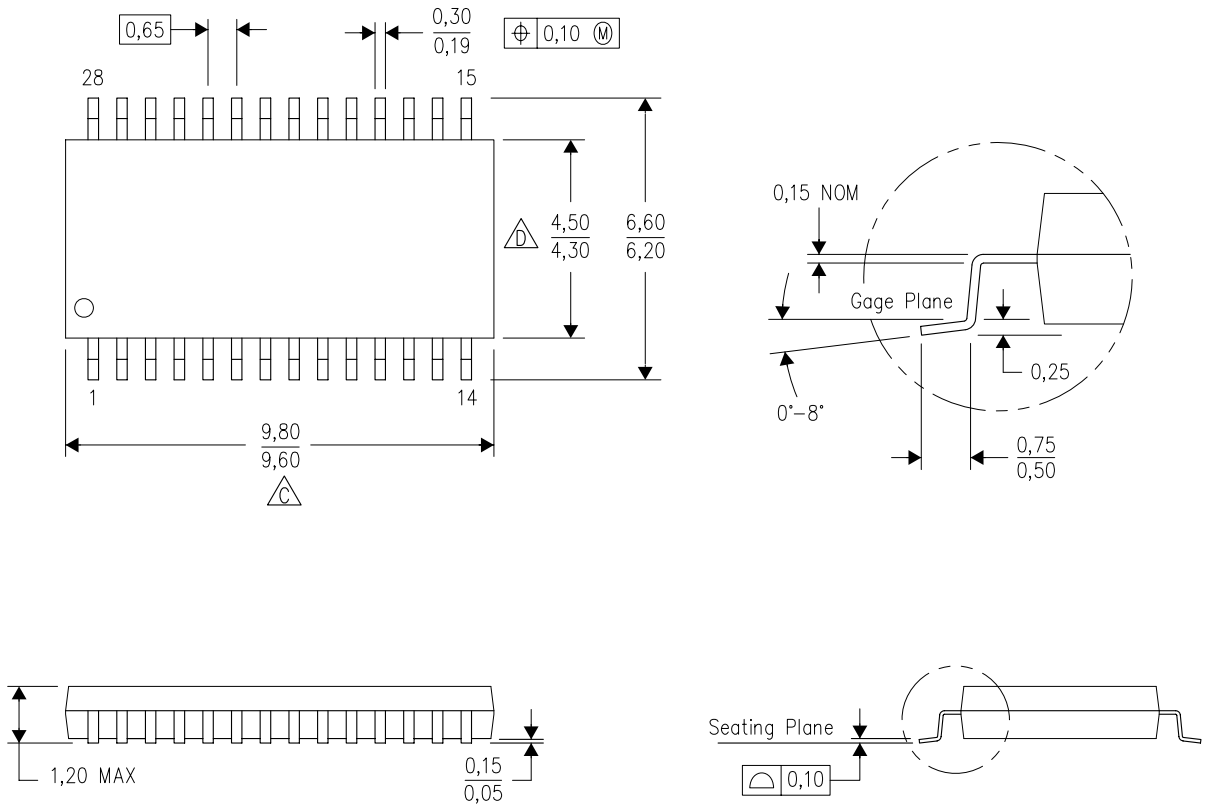

4040064–7/G 02/11

NOTES:
A. All linear dimensions are in millimeters. Dimensioning and tolerancing per ASME Y14.5M–1994.
B. This drawing is subject to change without notice.
C. Body length does not include mold flash, protrusions, or gate burrs. Mold flash, protrusions, or gate burrs shall not exceed 0,15 each side.
D. Body width does not include interlead flash. Interlead flash shall not exceed 0,25 each side.
E. Falls within JEDEC MO–153

IMPORTANT NOTICE AND DISCLAIMER

TI PROVIDES TECHNICAL AND RELIABILITY DATA (INCLUDING DATASHEETS), DESIGN RESOURCES (INCLUDING REFERENCE DESIGNS), APPLICATION OR OTHER DESIGN ADVICE, WEB TOOLS, SAFETY INFORMATION, AND OTHER RESOURCES “AS IS” AND WITH ALL FAULTS, AND DISCLAIMS ALL WARRANTIES, EXPRESS AND IMPLIED, INCLUDING WITHOUT LIMITATION ANY IMPLIED WARRANTIES OF MERCHANTABILITY, FITNESS FOR A PARTICULAR PURPOSE OR NON-INFRINGEMENT OF THIRD PARTY INTELLECTUAL PROPERTY RIGHTS.

These resources are intended for skilled developers designing with TI products. You are solely responsible for (1) selecting the appropriate TI products for your application, (2) designing, validating and testing your application, and (3) ensuring your application meets applicable standards, and any other safety, security, regulatory or other requirements.

These resources are subject to change without notice. TI grants you permission to use these resources only for development of an application that uses the TI products described in the resource. Other reproduction and display of these resources is prohibited. No license is granted to any other TI intellectual property right or to any third party intellectual property right. TI disclaims responsibility for, and you fully indemnify TI and its representatives against any claims, damages, costs, losses, and liabilities arising out of your use of these resources.

TI’s products are provided subject to TI’s Terms of Sale, TI’s General Quality Guidelines, or other applicable terms available either on ti.com or provided in conjunction with such TI products. TI’s provision of these resources does not expand or otherwise alter TI’s applicable warranties or warranty disclaimers for TI products. Unless TI explicitly designates a product as custom or customer-specified, TI products are standard, catalog, general purpose devices.

TI objects to and rejects any additional or different terms you may propose.

Copyright © 2025, Texas Instruments Incorporated

Last updated 10/2025