TS3USB221 High-Speed USB 2.0 (480Mbps) 1:2 Multiplexer or Demultiplexer Switch with Single Enable

1 Features

- V_{CC} operation from 2.3V and 3.6V
- $V_{I/O}$ accepts signals up to 5.5V
- 1.8V compatible control-pin inputs
- Low-power mode when $\overline{OE}$ is disabled (1µA)
- R_{ON} = 6Ω maximum
- Δr_{ON} = 0.2Ω typical
- $C_{IO(ON)}$ = 6pf maximum
- Low power consumption (30µA maximum)
- ESD > 2000V Human-Body Model (HBM)
- High bandwidth (1GHz typical)

2 Applications

- Routes signals for USB 1.0, 1.1, and 2.0
- Mobile industry processor interface (MIPI™) signal routing
- MHL 1.0

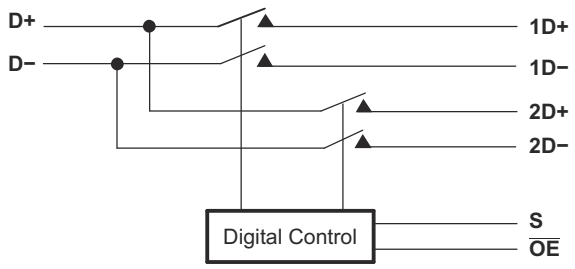

Block Diagram

3 Description

The TS3USB221 is a high-bandwidth switch specially designed for the switching of high-speed USB 2.0 signals in handset and consumer applications, such as cell phones, digital cameras, and notebooks with hubs or controllers with limited USB I/Os. The wide bandwidth (1GHz) of this switch allows signals to pass with minimum edge and phase distortion. The device multiplexes differential outputs from a USB host device to one of two corresponding outputs. The switch is bidirectional and offers little or no attenuation of the high-speed signals at the outputs. The TS3USB221 is designed for low bit-to-bit skew and high channel to channel noise isolation. The TS3USB221 is also compatible with various standards, such as high-speed USB 2.0 (480Mbps).

Package Information

PART NUMBER	PACKAGE(1)	PACKAGE SIZE(2)
TS3USB221	DRC (VSON, 10)	3mm × 3mm
	RSE (UQFN, 10)	2mm × 1.5mm

(1) For all available packages, see Section 11.
(2) The package size (length × width) is a nominal value and includes pins, where applicable.

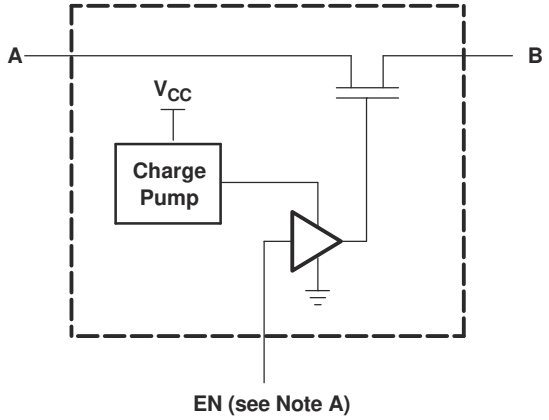

A. EN is the internal enable signal applied to the switch.

Simplified Schematic, Each FET Switch (SW)

An IMPORTANT NOTICE at the end of this data sheet addresses availability, warranty, changes, use in safety-critical applications, intellectual property matters and other important disclaimers. PRODUCTION DATA.

Table of Contents

1 Features....1
2 Applications....1
3 Description....1
4 Pin Configuration and Functions....3
5 Specifications....4
5.1 Absolute Maximum Ratings....4
5.2 ESD Ratings....4
5.3 Recommended Operating Conditions....4
5.4 Thermal Information....5
5.5 Electrical Characteristics....5
5.6 Dynamic Electrical Characteristics, V_{CC} = 3.3V ± 10%....6
5.7 Dynamic Electrical Characteristics, V_{CC} = 2.5V ± 10%....6
5.8 Switching Characteristics, V_{CC} = 3.3V ± 10%....6
5.9 Switching Characteristics, V_{CC} = 2.5V ± 10%....6
5.10 Typical Characteristics....7
6 Parameter Measurement Information....8
7 Detailed Description....12
7.1 Overview....12
7.2 Functional Block Diagram....12
7.3 Feature Description....12
7.4 Device Functional Modes....12
8 Application and Implementation....13
8.1 Application Information....13
8.2 Typical Application....13
8.3 Power Supply Recommendations....15
8.4 Layout....15
9 Device and Documentation Support....17
9.1 Documentation Support....17
9.2 Receiving Notification of Documentation Updates....17
9.3 Support Resources....17
9.4 Trademarks....17
9.5 Electrostatic Discharge Caution....17
9.6 Glossary....17
10 Revision History....17
11 Mechanical, Packaging, and Orderable Information....18

Copyright © 2024 Texas Instruments Incorporated

4 Pin Configuration and Functions

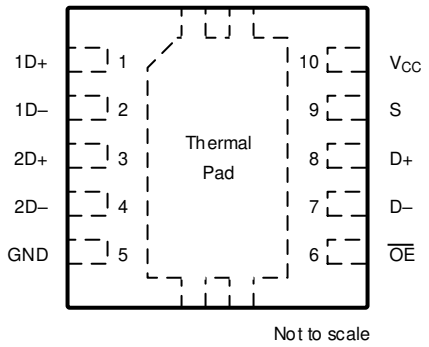

Figure 4-1. DRC Package, 10-Pin VSON (Top View)

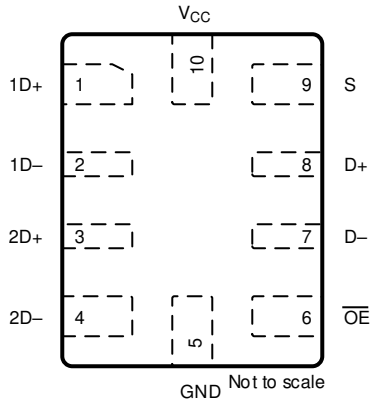

Figure 4-2. RSE Package, 10-Pin UQFN (Top View)

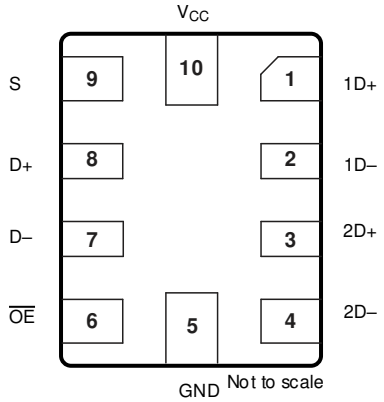

Figure 4-3. RSE Package, 10-Pin UQFB (Bottom View)

Table 4-1. Pin Functions

PIN		TYPE[(1)]	DESCRIPTION
NAME	NO.		
1D+	1	I/O	USB port 1
1D–	2	I/O	
2D+	3	I/O	USB port 2
2D–	4	I/O	
GND	5	—	Ground
$\overline{OE}$	6	I	Bus-switch enable
D–	7	I/O	Common USB port
D+	8	I/O	
S	9	I	Select input
V_{CC}	10	—	Supply voltage

(1) I = input, O = output

5 Specifications

5.1 Absolute Maximum Ratings

over operating free-air temperature range (unless otherwise noted)[1]

			MIN	MAX	UNIT
V_{CC}	Supply voltage		–0.5	4.6	V
V_{IN}	Control input voltage[2] [3]		–0.5	7	V
$V_{I/O}$	Switch I/O voltage[2] [3] [4] [6]		–0.5	7	V
I_{IK}	Control input clamp current	V_{IN} < 0		–50	mA
$I_{I/OK}$	I/O port clamp current	$V_{I/O}$ < 0		–50	mA
$I_{I/O}$	ON-state switch current[5]			±120	mA
	Continuous current through V_{CC} or GND			±100	mA
T_{stg}	Storage temperature		–65	150	°C

(1) Operation outside the *Absolute Maximum Ratings* may cause permanent device damage. *Absolute Maximum Ratings* do not imply functional operation of the device at these or any other conditions beyond those listed under *Recommended Operating Conditions*. If used outside the *Recommended Operating Conditions* but within the *Absolute Maximum Ratings*, the device may not be fully functional, and this may affect device reliability, functionality, performance, and shorten the device lifetime.
(2) All voltages are with respect to ground, unless otherwise specified.
(3) The input and output voltage ratings may be exceeded if the input and output clamp-current ratings are observed.
(4) V_I and V_O are used to denote specific conditions for $V_{I/O}$.
(5) I_I and I_O are used to denote specific conditions for $I_{I/O}$.
(6) The I/O pins are 5.5V tolerant and functional for the entire range. However, for $V^{I/O}$ > 3.6V, the channel RON is high (up to 100Ω).

5.2 ESD Ratings

			VALUE	UNIT
$V_{(ESD)}$	Electrostatic discharge	Human-body model (HBM), per ANSI/ESDA/JEDEC JS-001 [1]	±2000	V
		Charged-device model (CDM), per ANSI/ESDA/JEDEC JS-002 [2]	±1500	V

(1) JEDEC document JEP155 states that 500V HBM allows safe manufacturing with a standard ESD control process.
(2) JEDEC document JEP157 states that 250V CDM allows safe manufacturing with a standard ESD control process.

5.3 Recommended Operating Conditions

See [1].

			MIN	MAX	UNIT
V_{CC}	Supply voltage		2.3	3.6	V
V_{IH}	High-level control input voltage	V_{CC} = 2.3V to 2.7V	0.46 × V_{CC}	V_{CC}	V
		V_{CC} = 2.7V to 3.6V			
V_{IL}	Low-level control input voltage	V_{CC} = 2.3V to 2.7V	0	0.25 × V_{CC}	V
		V_{CC} = 2.7V to 3.6V			
$V_{I/O}$	Data input/output voltage		0	5.5	V
T_A	Operating free-air temperature		–40	85	°C

(1) All unused control inputs of the device must be held at V_{CC} or GND to ensure proper device operation. Refer to the *Implications of Slow or Floating CMOS Inputs* application note.

Copyright © 2024 Texas Instruments Incorporated

5.4 Thermal Information

THERMAL METRIC[1]		TS3USB221		UNIT
		DRC (VSON)	RSE (UQFN)	
		10 PINS	10 PINS	
$R_{\theta JA}$	Junction-to-ambient thermal resistance	57.7	204.8	°C/W
$R_{\theta JC(top)}$	Junction-to-case (top) thermal resistance	87.7	118.1	
$R_{\theta JB}$	Junction-to-board thermal resistance	32.6	121.5	
ψ_{JT}	Junction-to-top characterization parameter	8.2	13.9	
ψ_{JB}	Junction-to-board characterization parameter	32.8	121.2	
$R_{\theta JC(bot)}$	Junction-to-case (bottom) thermal resistance	18.5	N/A	

(1) For more information about traditional and new thermal metrics, see the *Semiconductor and IC Package Thermal Metrics* application note.

5.5 Electrical Characteristics

over operating free-air temperature range (unless otherwise noted)[1]

PARAMETER		TEST CONDITIONS			MIN	TYP[2]	MAX	UNIT
V_{IK}		V_{CC} = 3.6V, 2.7V,	I_I = –18mA		–1.8			V
I_{IN}	Control inputs	V_{CC} = 3.6V, 2.7V, 0V,	V_{IN} = 0V to 3.6V				±1	µA
I_{OZ} [3]		V_{CC} = 3.6V, 2.7V, V_O = 0V to 3.6V, V_I = 0V,	V_{IN} = V_{CC} or GND, Switch OFF				±1	µA
I_{OFF}		V_{CC} = 0V	$V_{I/O}$ = 0V to 3.6V				±2	µA
			$V_{I/O}$ = 0V to 2.7V				±1	
I_{CC}		V_{CC} = 3.6V, 2.7V, V_{IN} = V_{CC} or GND,	$I_{I/O}$ = 0V, Switch ON or OFF				30	µA
I_{CC} (low power mode)		V_{CC} = 3.6V, 2.7V, V_{IN} = V_{CC} or GND	Switch disabled ($\overline{OE}$ in high state)				1	µA
ΔI_{CC} [4]	Control inputs	One input at 1.8V, Other inputs at V_{CC} or GND	V_{CC} = 3.6V				20	µA
			V_{CC} = 2.7V				0.5	
C_{in}	Control inputs	V_{CC} = 3.3V, 2.5V,	V_{IN} = 3.3V or 0V			1	2	pF
$C_{io(OFF)}$		V_{CC} = 3.3V, 2.5V,	$V_{I/O}$ = 3.3V or 0V,	Switch OFF		3	4	pF
$C_{io(ON)}$		V_{CC} = 3.3V, 2.5V,	$V_{I/O}$ = 3.3V or 0V,	Switch ON		5	6	pF
r_{on} [5]		V_{CC} = 3V, 2.3V	V_I = 0V,	I_O = 30mA			6	Ω
			V_I = 2.4V,	I_O = –15mA			6	
Δr_{on}		V_{CC} = 3V, 2.3V	V_I = 0V,	I_O = 30mA		0.2		Ω
			V_I = 1.7,	I_O = –15mA		0.2		
$r_{on(flat)}$		V_{CC} = 3V, 2.3V	V_I = 0V,	I_O = 30mA		1		Ω
			V_I = 1.7,	I_O = –15mA		1		

(1) V_{IN} and I_{IN} refer to control inputs. V_I, V_O, I_I, and I_O refer to data pins.
(2) All typical values are at V_{CC} = 3.3V (unless otherwise noted), T_A = 25°C.
(3) For I/O ports, the parameter I_{OZ} includes the input leakage current.
(4) This is the increase in supply current for each input that is at the specified TTL voltage level, rather than V_{CC} or GND.
(5) Measured by the voltage drop between the A and B terminals at the indicated current through the switch. ON-state resistance is determined by the lower of the voltages of the two (A or B) terminals.

Copyright © 2024 Texas Instruments Incorporated

5.6 Dynamic Electrical Characteristics, V_{CC} = 3.3V ± 10%

over operating range, T_A = –40°C to 85°C, V_{CC} = 3.3V ± 10%, GND = 0V

PARAMETER		TEST CONDITIONS	TYP(1)	UNIT
X_{TALK}	Crosstalk	R_L = 50Ω, f = 250MHz	–40	dB
O_{IRR}	OFF isolation	R_L = 50Ω, f = 250MHz	–41	dB
BW	Bandwidth (–3dB)	R_L = 50Ω	1	GHz

(1) For Maximum or Minimum conditions, use the appropriate value specified under *Electrical Characteristics* for the applicable device type.

5.7 Dynamic Electrical Characteristics, V_{CC} = 2.5V ± 10%

over operating range, T_A = –40°C to 85°C, V_{CC} = 2.5V ± 10%, GND = 0V

PARAMETER		TEST CONDITIONS	TYP(1)	UNIT
X_{TALK}	Crosstalk	R_L = 50Ω, f = 250MHz	–39	dB
O_{IRR}	OFF isolation	R_L = 50Ω, f = 250MHz	–40	dB
BW	Bandwidth (–3dB)	R_L = 50Ω	1	GHz

(1) For maximum or minimum conditions, use the appropriate value specified under *Electrical Characteristics* for the applicable device type.

5.8 Switching Characteristics, V_{CC} = 3.3V ± 10%

over operating range, T_A = –40°C to 85°C, V_{CC} = 3.3V ± 10%, GND = 0V

PARAMETER			MIN	TYP(1)	MAX	UNIT
t_{pd}	Propagation delay(2) (3)			0.25		ns
t_{ON}	Line enable time	S to D, nD			30	ns
		$\overline{OE}$ to D, nD			17	
t_{OFF}	Line disable time	S to D, nD			12	ns
		$\overline{OE}$ to D, nD			10	
$t_{SK(O)}$	Output skew between center port to any other port(2)			0.1	0.2	ns
$t_{SK(P)}$	Skew between opposite transitions of the same output (t_{PHL} – t_{PLH})(2)			0.1	0.2	ns

(1) For maximum or minimum conditions, use the appropriate value specified under *Electrical Characteristics* for the applicable device type.
(2) Specified by design
(3) The bus switch contributes no propagational delay other than the RC delay of the on resistance of the switch and the load capacitance. The time constant for the switch alone is of the order of 0.25ns for 10pF load. This time constant adds very little propagational delay to the system because the time is much smaller than the rise/fall times of typical driving signals. Propagational delay of the bus switch, when used in a system, is determined by the driving circuit on the driving side of the switch and the switch interactions with the load on the driven side.

5.9 Switching Characteristics, V_{CC} = 2.5V ± 10%

over operating range, T_A = –40°C to 85°C, V_{CC} = 2.5V ± 10%, GND = 0V

PARAMETER			MIN	TYP(1)	MAX	UNIT
t_{pd}	Propagation delay(2) (3)			0.25		ns
t_{ON}	Line enable time	S to D, nD			50	ns
		$\overline{OE}$ to D, nD			32	
t_{OFF}	Line disable time	S to D, nD			23	ns
		$\overline{OE}$ to D, nD			12	
$t_{SK(O)}$	Output skew between center port to any other port(2)			0.1	0.2	ns
$t_{SK(P)}$	Skew between opposite transitions of the same output (t_{PHL} – t_{PLH})(2)			0.1	0.2	ns

(1) For maximum or minimum conditions, use the appropriate value specified under *Electrical Characteristics* for the applicable device type.
(2) Specified by design
(3) The bus switch contributes no propagational delay other than the RC delay of the on resistance of the switch and the load capacitance. The time constant for the switch alone is of the order of 0.25ns for 10pF load. The time constraint adds very little propagational delay

Copyright © 2024 Texas Instruments Incorporated

to the system because the time is much smaller than the rise and fall times of typical driving signals. Propagational delay of the bus switch, when used in a system, is determined by the driving circuit on the driving side of the switch and the switch interactions with the load on the driven side.

5.10 Typical Characteristics

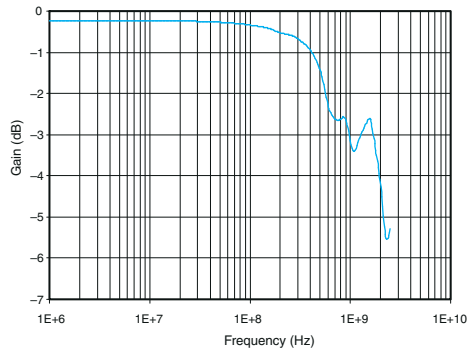

Figure 5-1. Gain vs Frequency

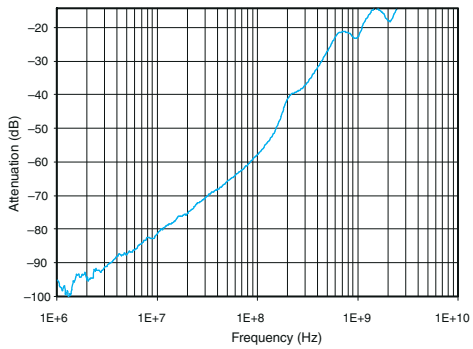

Figure 5-2. OFF Isolation vs Frequency

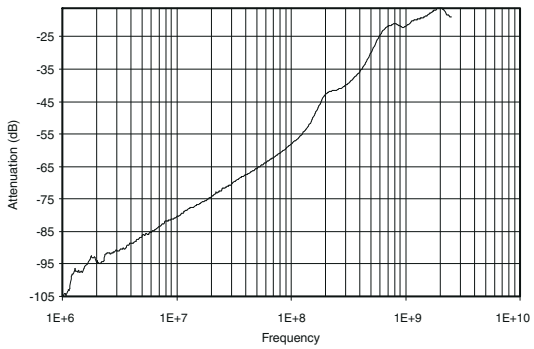

Figure 5-3. Crosstalk vs Frequency

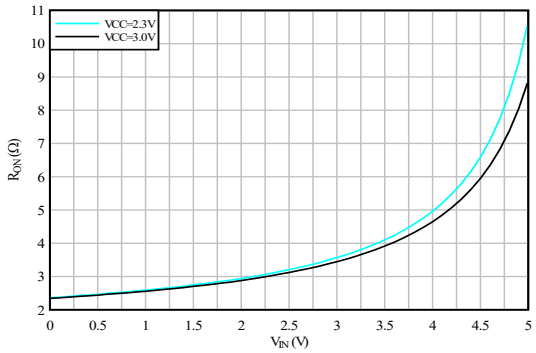

Figure 5-4. R_{on} vs V_{IN} (I_{OUT} = –30 mA)

6 Parameter Measurement Information

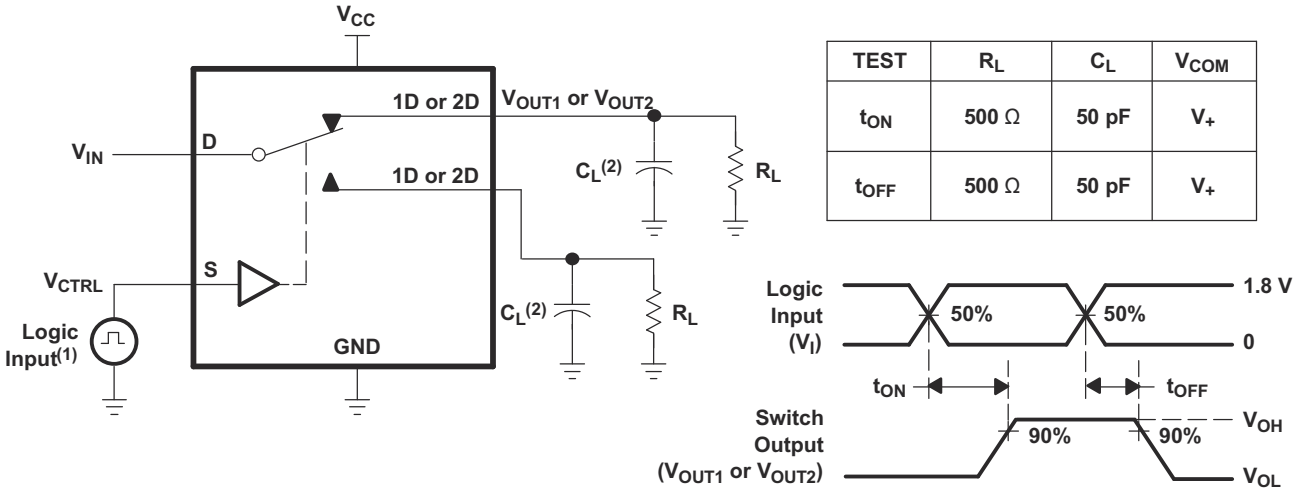

TEST	R_L	C_L	V_{COM}
t_{ON}	500 Ω	50 pF	V_+
t_{OFF}	500 Ω	50 pF	V_+

(1) All input pulses are supplied by generators having the following characteristics: PRR≤ 10 MHz, Z_O = 50 W, t_r < 5 ns, t_f < 5 ns.
(2) C_L includes probe and jig capacitance.

Figure 6-1. Turnon (t_{ON}) and Turnoff Time (t_{OFF})

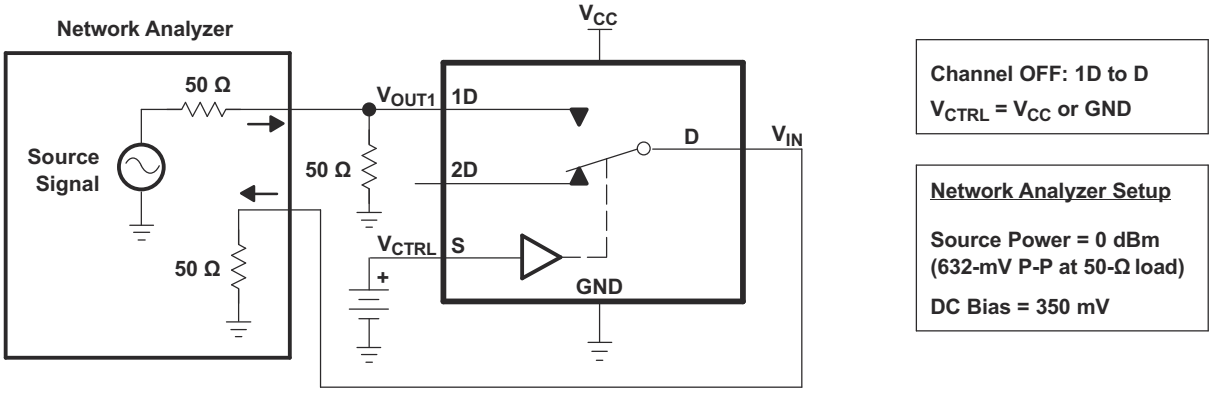

Figure 6-2. OFF Isolation (O_{ISO})

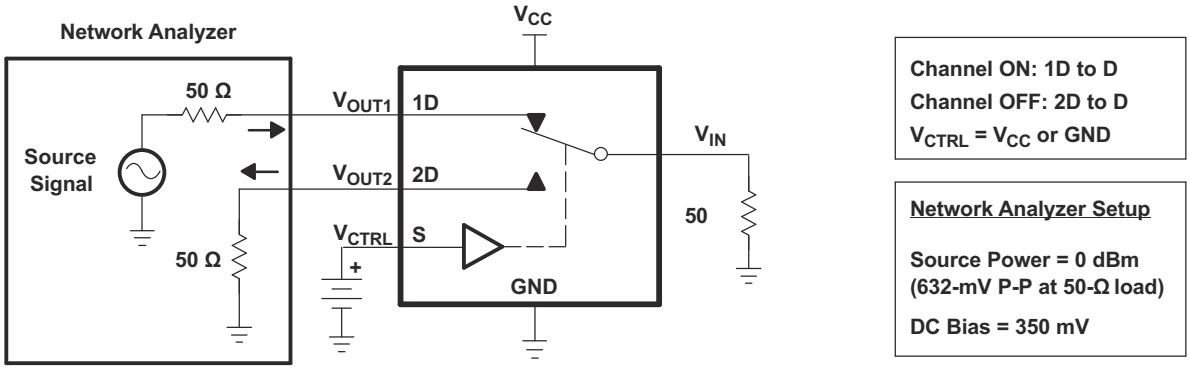

Figure 6-3. Crosstalk (X_{TALK})

Copyright © 2024 Texas Instruments Incorporated

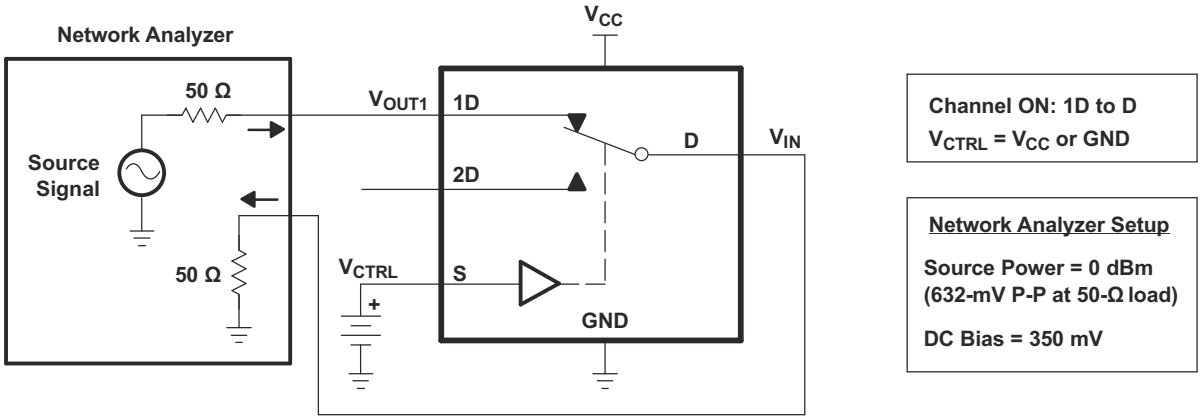

Figure 6-4. Bandwidth (BW)

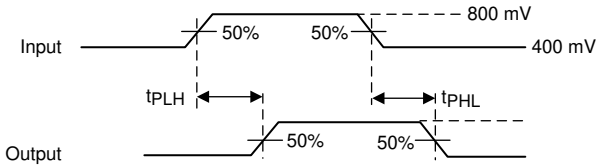

Figure 6-5. Propagation Delay

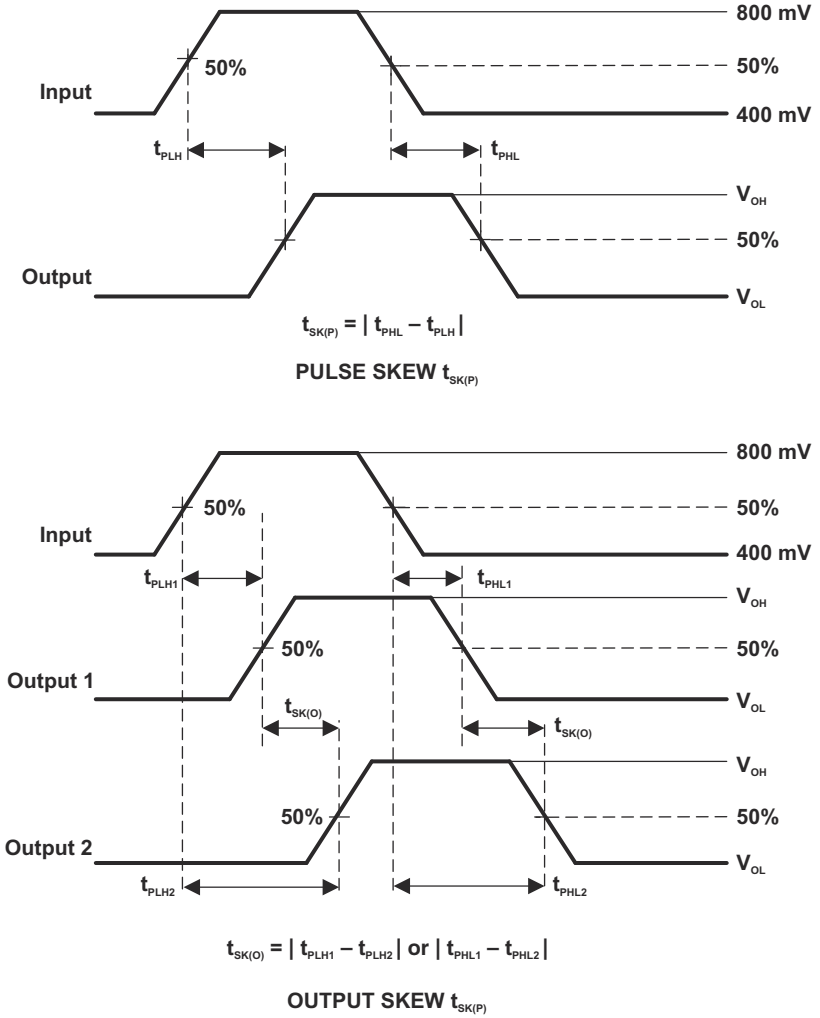

Figure 6-6. Skew Test

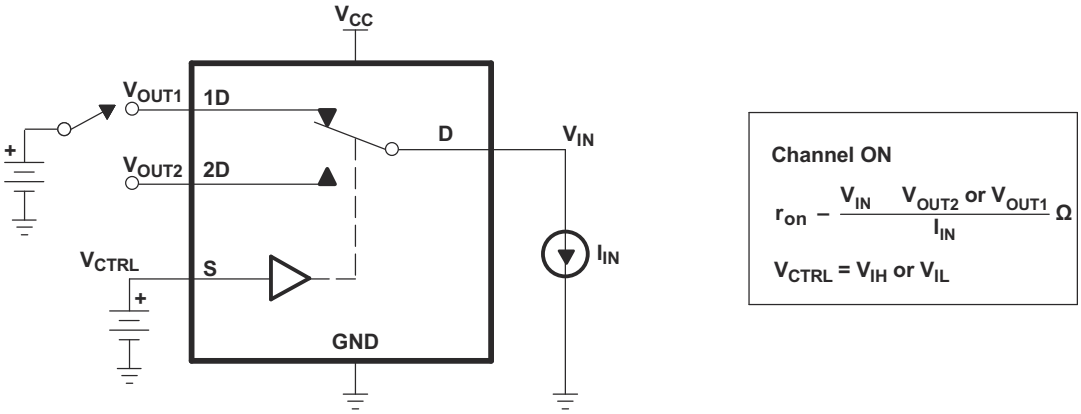

Figure 6-7. ON-State Resistance (r_{on})

Copyright © 2024 Texas Instruments Incorporated

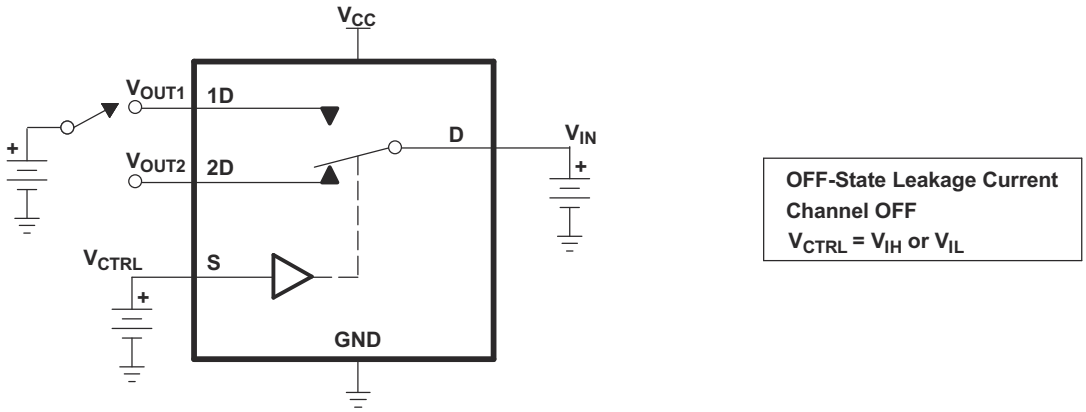

Figure 6-8. OFF-State Leakage Current

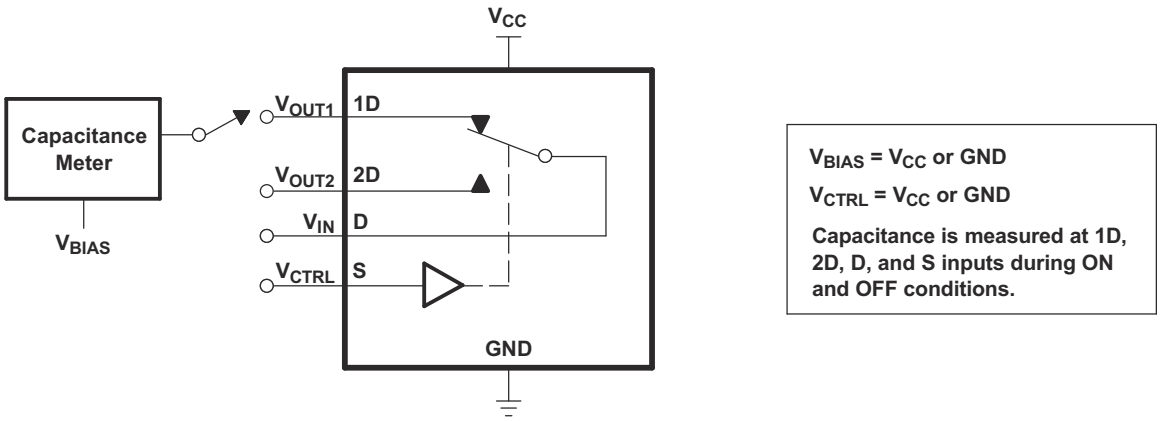

Figure 6-9. Capacitance

7 Detailed Description

7.1 Overview

The TS3USB221 device is a 2-channel SPDT switch specially designed for the switching of high-speed USB 2.0 signals in handset and consumer applications, such as cell phones, digital cameras, and notebooks with hubs or controllers with limited USB I/Os. The wide bandwidth (1GHz) of this switch allows signals to pass with minimum edge and phase distortion. The device multiplexes differential outputs from a USB host device to one of two corresponding outputs. The switch is bidirectional and offers little or no attenuation of the high-speed signals at the outputs. The device also has a low power mode that reduces the power consumption to 1 µA for portable applications with a battery or limited power budget.

The device is designed for low bit-to-bit skew and high channel-to-channel noise isolation, and is compatible with various standards, such as high-speed USB 2.0 (480Mbps).

The TS3USB221 device integrates ESD protection cells on all pins, is available in a SON package (3mm × 3mm) as well as in a tiny µQFN package (2mm × 1.5mm) and is characterized over the free-air temperature range from –40°C to 85°C.

7.2 Functional Block Diagram

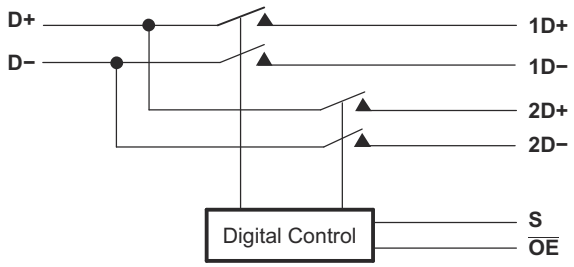

7.3 Feature Description

7.3.1 Low Power Mode

The TS3USB221 has a low power mode that reduces the power consumption to 1 µA when the device is not in use. The bus-switch enable pin $\overline{OE}$ must be supplied with a logic high signal to put the device in low power mode and disable the switch.

7.4 Device Functional Modes

Table 7-1. Truth Table

S	$\overline{OE}$	FUNCTION
X	H	Disconnect
L	L	D = 1D
H	L	D = 2D

Copyright © 2024 Texas Instruments Incorporated

8 Application and Implementation

Note

Information in the following applications sections is not part of the TI component specification, and TI does not warrant its accuracy or completeness. TI's customers are responsible for determining suitability of components for their purposes, as well as validating and testing their design implementation to confirm system functionality.

8.1 Application Information

There are many USB applications in which the USB hubs or controllers have a limited number of USB I/Os. The TS3USB221 can effectively expand the limited USB I/Os by switching between multiple USB buses and interface with the buses on a single USB hub or controller. TS3USB221 can also be used to connect a single controller to two USB connectors.

8.2 Typical Application

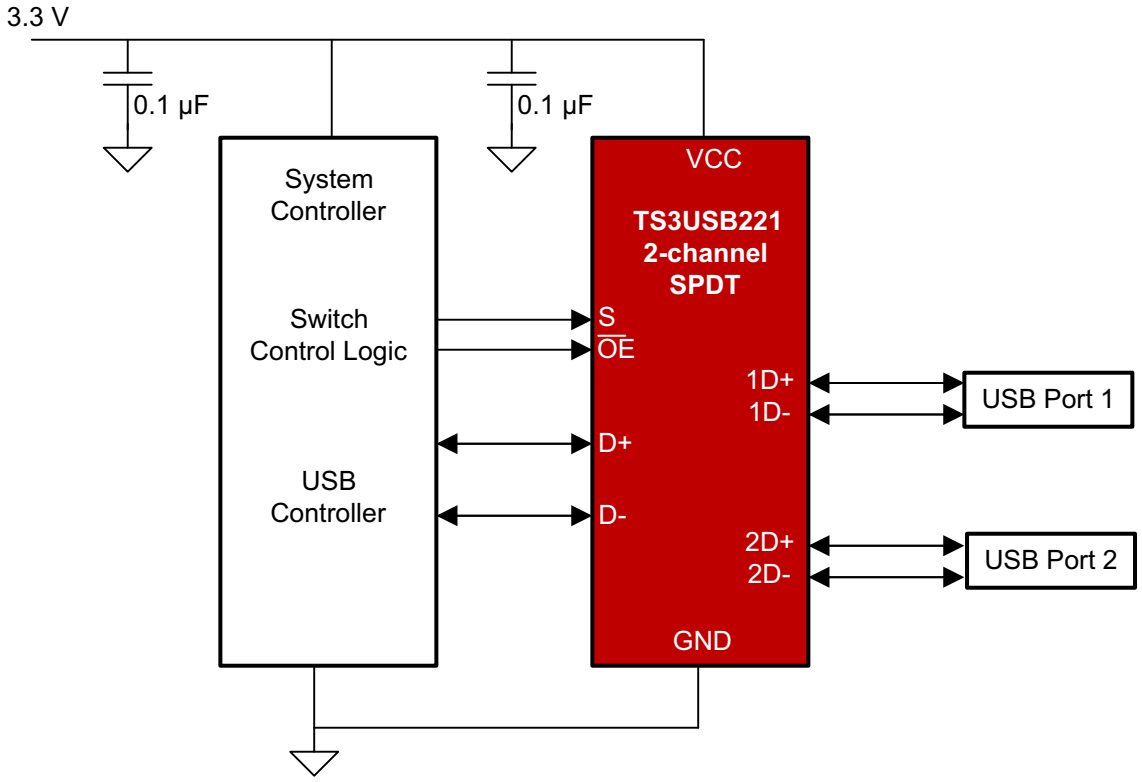

Figure 8-1. Simplified Schematic

8.2.1 Design Requirements

Follow the design requirements of the USB 1.0, 1.1, and 2.0 standards.

TI recommends that the digital control pins S and $\overline{OE}$ be pulled up to V_{CC} or down to GND to avoid undesired switch positions that can result from the floating pin.

8.2.2 Detailed Design Procedure

The TS3USB221 can operate properly without any external components. However, TI recommends to connect unused pins to ground through a 50Ω resistor to prevent signal reflections back into the device.

8.2.3 Application Curves

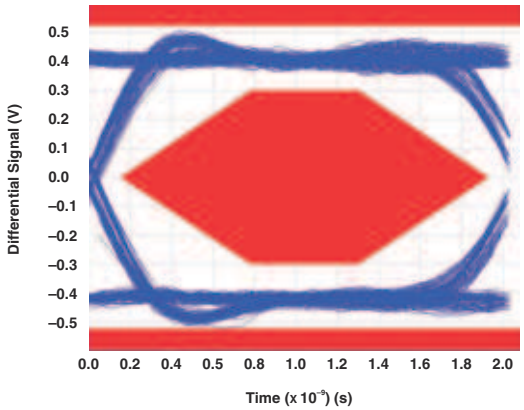

Figure 8-2. Eye Pattern: 480Mbps USB Signal With No Switch (Through Path)

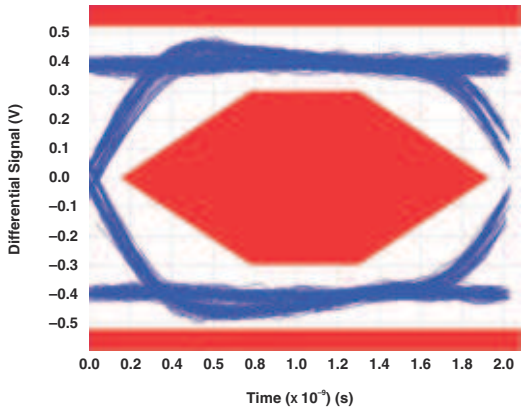

Figure 8-3. Eye Pattern: 480Mbps USB Signal With Switch NC Path

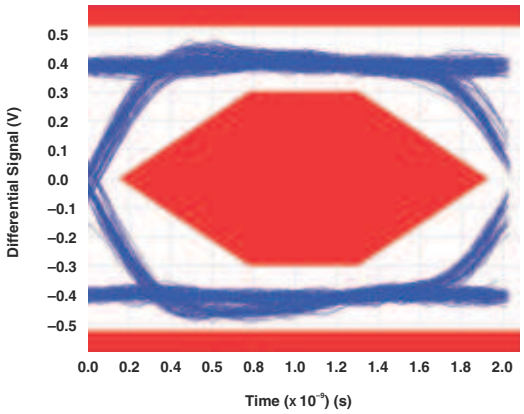

Figure 8-4. Eye Pattern: 480Mbps USB Signal With Switch NO Path

Copyright © 2024 Texas Instruments Incorporated

8.3 Power Supply Recommendations

Make sure the power to the device is supplied through the V_{CC} pin and follows the USB 1.0, 1.1, and 2.0 standards. TI recommends placing a bypass capacitor as close as possible to the supply pin V_{CC} to help smooth out lower frequency noise to provide better load regulation across the frequency spectrum.

8.4 Layout

8.4.1 Layout Guidelines

Place supply bypass capacitors as close to V_{CC} pin as possible. Avoid placing the bypass caps near the D+/D– traces.

Make sure the high-speed D+/D– trace lengths match and are no more than 4 inches, otherwise the eye diagram performance can degrade. A high-speed USB connection is made through a shielded, twisted pair cable with a differential characteristic impedance. In the layout, make sure the impedance of D+ and D– traces match the cable characteristic differential impedance for optimal performance.

Route the high-speed USB signals using a minimum of vias and corners to reduce signal reflections and impedance changes. When a via must be used, increase the clearance size around the via to minimize the capacitance. Each via introduces discontinuities in the transmission line of the signal and increases the chance of picking up interference from the other layers of the board. Be careful when designing test points on twisted pair lines; through-hole pins are not recommended.

When it becomes necessary to turn 90°, use two 45° turns or an arc instead of making a single 90° turn. This reduces reflections on the signal traces by minimizing impedance discontinuities.

Do not route USB traces under or near crystals, oscillators, clock signal generators, switching regulators, mounting holes, magnetic devices or ICs that use or duplicate clock signals.

Avoid stubs on the high-speed USB signals because stubs cause signal reflections. If a stub is unavoidable, keep the stub less than 200mm.

Route all high-speed USB signal traces over continuous planes (V_{CC} or GND), with no interruptions.

Avoid crossing over anti-etch, commonly found with plane splits.

A printed circuit board with at least four layers is recommended because of high frequencies associated with the USB; two signal layers separated by a ground and power layer as shown in Figure 8-5.

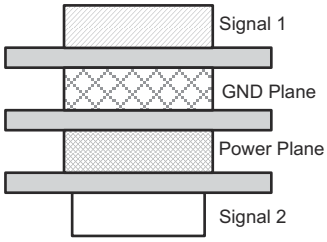

Figure 8-5. Four-Layer Board Stack-Up

Make sure the majority of signal traces run on a single layer, preferably Signal 1. Make sure the GND plane, which is solid with no cuts, is immediately next to this layer. Avoid running signal traces across a split in the ground or power plane. When running across split planes is unavoidable, sufficient decoupling must be used. Minimizing the number of signal vias reduces EMI by reducing inductance at high frequencies. For more information on layout guidelines, see *High Speed Layout Guidelines* and *USB 2.0 Board Design and Layout Guidelines*.

8.4.2 Layout Example

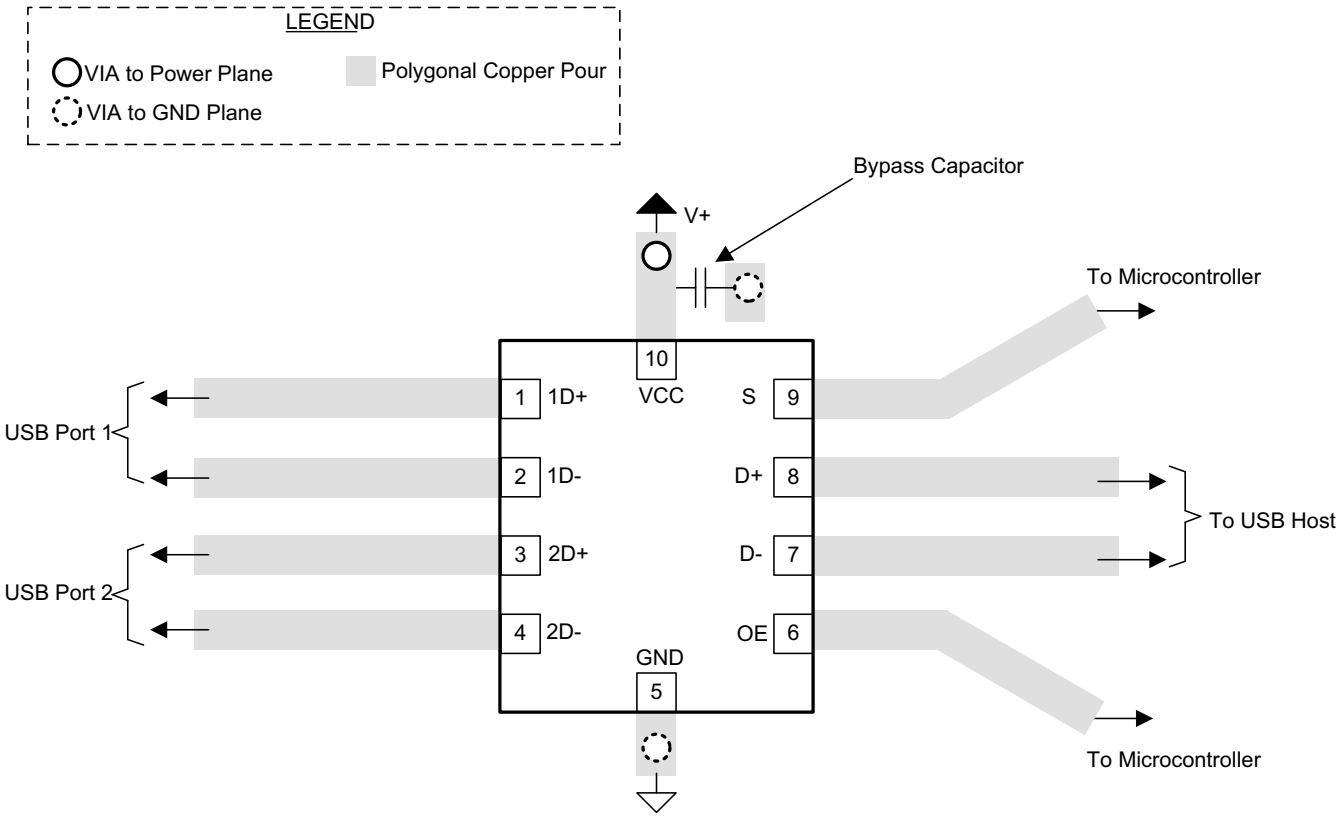

Figure 8-6. Package Layout Diagram

Copyright © 2024 Texas Instruments Incorporated

9 Device and Documentation Support

9.1 Documentation Support

9.1.1 Related Documentation

For related documentation, see the following:

- Texas Instruments, *High Speed Layout Guidelines*
- Texas Instruments, *USB 2.0 Board Design and Layout Guidelines*
- Texas Instruments, *Implications of Slow or Floating CMOS Inputs* application note

9.2 Receiving Notification of Documentation Updates

To receive notification of documentation updates, navigate to the device product folder on ti.com. Click on *Notifications* to register and receive a weekly digest of any product information that has changed. For change details, review the revision history included in any revised document.

9.3 Support Resources

TI E2E™ support forums are an engineer's go-to source for fast, verified answers and design help — straight from the experts. Search existing answers or ask your own question to get the quick design help you need.

Linked content is provided "AS IS" by the respective contributors. They do not constitute TI specifications and do not necessarily reflect TI's views; see TI's Terms of Use.

9.4 Trademarks

MIPI™ is a trademark of Mobile Industry Processor Interface Alliance.
TI E2E™ is a trademark of Texas Instruments.
All trademarks are the property of their respective owners.

9.5 Electrostatic Discharge Caution

This integrated circuit can be damaged by ESD. Texas Instruments recommends that all integrated circuits be handled with appropriate precautions. Failure to observe proper handling and installation procedures can cause damage.

ESD damage can range from subtle performance degradation to complete device failure. Precision integrated circuits may be more susceptible to damage because very small parametric changes could cause the device not to meet its published specifications.

9.6 Glossary

TI Glossary	This glossary lists and explains terms, acronyms, and definitions.

10 Revision History

NOTE: Page numbers for previous revisions may differ from page numbers in the current version.

Changes from Revision L (October 2024) to Revision M (November 2024)	Page
• Changed the typical bandwidth value listed in the *Description* section and the *Dynamic Electrical Characteristics* tables from: 1.1GHz to: 1GHz	1

Changes from Revision K (July 2024) to Revision L (October 2024)	Page
• Changed *Features* bullet from: R_{ON} = 6ω maximum to: R_{ON} = 6Ω maximum	1
• Changed *Features* bullet from: δr_{ON} = 0.2ω typical to: Δr_{ON} = 0.2Ω typical	1

Changes from Revision J (January 2019) to Revision K (July 2024)	Page
• Updated the numbering format for tables, figures, and cross-references throughout the document	1
• Changed the typical bandwidth value from: 1.1GHz to: 1GHz	1

- Added footnote to the $V_{I/O}$ parameter in the *Absolute Maximum Ratings* table.... 4
- Changed CDM test conditions in the *ESD Ratings* table from: per JEDEC specification JESD22-C101 to: per ANSI/ESDA/JEDEC JS-002.... 4
- Changed RSE (UQFN) junction-to-ambient thermal resistance value from: 169.8°C/W to: 204.8°C/W.... 5
- Changed RSE (UQFN) junction-to-case (top) thermal resistance value from: 84.7°C/W to: 118.1°C/W.... 5
- Changed RSE (UQFN) junction-to-board thermal resistance value from: 94.9°C/W to: 121.5°C/W.... 5
- Changed RSE (UQFN) junction-to-top characterization parameter value from: 5.7°C/W to: 13.9°C/W.... 5
- Changed RSE (UQFN) junction-to-board characterization parameter value from: 94.9°C/W to: 121.2°C/W.... 5
- Changed the V_{IK} value in the *Electrical Characteristics* table from: –1.8V maximum to: –1.8V minimum.... 5
- Changed the *Typical Characteristics* section.... 7

Changes from Revision I (January 2016) to Revision J (January 2019) **Page**

- Added CDM value and table notes to the ESD Ratings.... 4

Changes from Revision H (February 2015) to Revision I (January 2016) **Page**

- Changed V_{IH} Max from 5.5 to V_{CC} in *Recommended Operating Conditions* table.... 4

Changes from Revision G (September 2010) to Revision H (February 2015) **Page**

- Changed first bullet of the Features FROM: V_{CC} Operation at 2.5V and 3.3V TO: V_{CC} Operation at 2.3V and 3.6V.... 1
- Added *Pin Configuration and Functions* section, *ESD Ratings* table, *Feature Description* section, *Device Functional Modes*, *Application and Implementation* section, *Power Supply Recommendations* section, *Layout* section, *Device and Documentation Support* section, and *Mechanical, Packaging, and Orderable Information* section 1
- Removed the *Ordering Information* table.... 1

11 Mechanical, Packaging, and Orderable Information

The following pages include mechanical, packaging, and orderable information. This information is the most current data available for the designated devices. This data is subject to change without notice and revision of this document. For browser-based versions of this data sheet, refer to the left-hand navigation.

Copyright © 2024 Texas Instruments Incorporated

PACKAGING INFORMATION

Orderable part number	Status (1)	Material type (2)	Package | Pins	Package qty | Carrier	RoHS (3)	Lead finish/ Ball material (4)	MSL rating/ Peak reflow (5)	Op temp (°C)	Part marking (6)
SN080104RSER	Active	Production	UQFN (RSE) | 10	3000 | LARGE T&R	Yes	NIPDAU	Level-1-260C-UNLIM	-40 to 85	(L57, L5H, L5O, L5R, L5V)
TS3USB221DRCR	Active	Production	VSON (DRC) | 10	3000 | LARGE T&R	Yes	NIPDAU	Level-2-260C-1 YEAR	-40 to 85	ZWG
TS3USB221DRCR.A	Active	Production	VSON (DRC) | 10	3000 | LARGE T&R	Yes	NIPDAU	Level-2-260C-1 YEAR	-40 to 85	ZWG
TS3USB221DRCR.B	Active	Production	VSON (DRC) | 10	3000 | LARGE T&R	Yes	NIPDAU	Level-2-260C-1 YEAR	-40 to 85	ZWG
TS3USB221DRCRG4	Active	Production	VSON (DRC) | 10	3000 | LARGE T&R	Yes	NIPDAU	Level-2-260C-1 YEAR	-40 to 85	ZWG
TS3USB221RSER	Active	Production	UQFN (RSE) | 10	3000 | LARGE T&R	Yes	NIPDAU	Level-1-260C-UNLIM	-40 to 85	(L57, L5H, L5O, L5R, L5V)
TS3USB221RSER.A	Active	Production	UQFN (RSE) | 10	3000 | LARGE T&R	Yes	NIPDAU	Level-1-260C-UNLIM	-40 to 85	(L57, L5H, L5O, L5R, L5V)
TS3USB221RSER.B	Active	Production	UQFN (RSE) | 10	3000 | LARGE T&R	Yes	NIPDAU	Level-1-260C-UNLIM	-40 to 85	(L57, L5H, L5O, L5R, L5V)
TS3USB221RSERG4	Active	Production	UQFN (RSE) | 10	3000 | LARGE T&R	Yes	NIPDAU	Level-1-260C-UNLIM	-40 to 85	(L57, L5H, L5O, L5R, L5V)

(1) **Status:** For more details on status, see our product life cycle.

(2) **Material type:** When designated, preproduction parts are prototypes/experimental devices, and are not yet approved or released for full production. Testing and final process, including without limitation quality assurance, reliability performance testing, and/or process qualification, may not yet be complete, and this item is subject to further changes or possible discontinuation. If available for ordering, purchases will be subject to an additional waiver at checkout, and are intended for early internal evaluation purposes only. These items are sold without warranties of any kind.

(3) **RoHS values:** Yes, No, RoHS Exempt. See the TI RoHS Statement for additional information and value definition.

(4) **Lead finish/Ball material:** Parts may have multiple material finish options. Finish options are separated by a vertical ruled line. Lead finish/Ball material values may wrap to two lines if the finish value exceeds the maximum column width.

(5) **MSL rating/Peak reflow:** The moisture sensitivity level ratings and peak solder (reflow) temperatures. In the event that a part has multiple moisture sensitivity ratings, only the lowest level per JEDEC standards is shown. Refer to the shipping label for the actual reflow temperature that will be used to mount the part to the printed circuit board.

(6) **Part marking:** There may be an additional marking, which relates to the logo, the lot trace code information, or the environmental category of the part.

Multiple part markings will be inside parentheses. Only one part marking contained in parentheses and separated by a "~" will appear on a part. If a line is indented then it is a continuation of the previous line and the two combined represent the entire part marking for that device.

Important Information and Disclaimer: The information provided on this page represents TI's knowledge and belief as of the date that it is provided. TI bases its knowledge and belief on information provided by third parties, and makes no representation or warranty as to the accuracy of such information. Efforts are underway to better integrate information from third parties. TI has taken and continues to take reasonable steps to provide representative and accurate information but may not have conducted destructive testing or chemical analysis on incoming materials and chemicals. TI and TI suppliers consider certain information to be proprietary, and thus CAS numbers and other limited information may not be available for release.

In no event shall TI's liability arising out of such information exceed the total purchase price of the TI part(s) at issue in this document sold by TI to Customer on an annual basis.

TAPE AND REEL INFORMATION

REEL DIMENSIONS

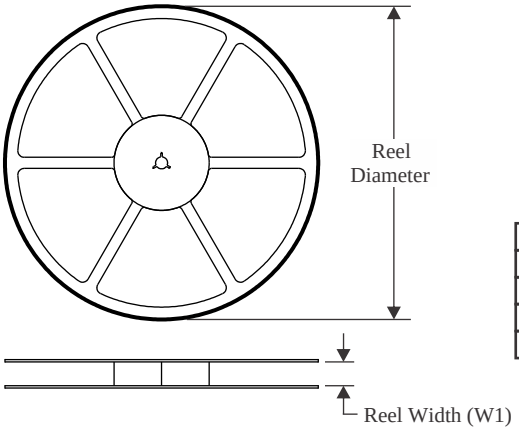

TAPE DIMENSIONS

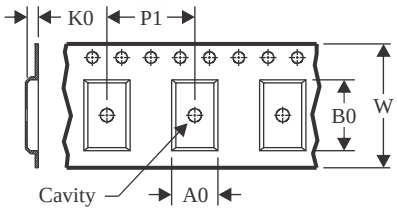

A0	Dimension designed to accommodate the component width
B0	Dimension designed to accommodate the component length
K0	Dimension designed to accommodate the component thickness
W	Overall width of the carrier tape
P1	Pitch between successive cavity centers

QUADRANT ASSIGNMENTS FOR PIN 1 ORIENTATION IN TAPE

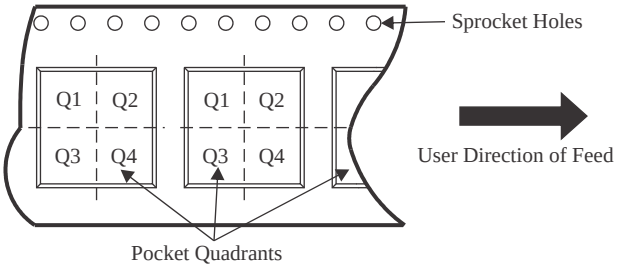

*All dimensions are nominal

Device	Package Type	Package Drawing	Pins	SPQ	Reel Diameter (mm)	Reel Width W1 (mm)	A0 (mm)	B0 (mm)	K0 (mm)	P1 (mm)	W (mm)	Pin1 Quadrant
TS3USB221DRCR	VSON	DRC	10	3000	330.0	12.4	3.3	3.3	1.1	8.0	12.0	Q2
TS3USB221RSER	UQFN	RSE	10	3000	180.0	8.4	1.68	2.13	0.76	4.0	8.0	Q1
TS3USB221RSER	UQFN	RSE	10	3000	180.0	9.5	1.7	2.2	0.75	4.0	8.0	Q1

TAPE AND REEL BOX DIMENSIONS

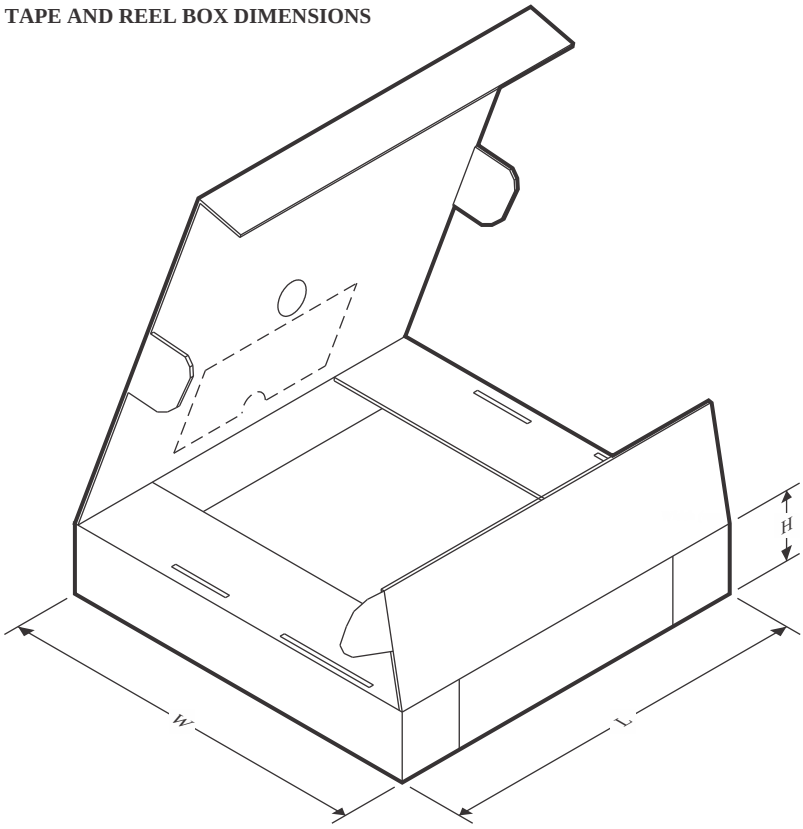

*All dimensions are nominal

Device	Package Type	Package Drawing	Pins	SPQ	Length (mm)	Width (mm)	Height (mm)
TS3USB221DRCR	VSON	DRC	10	3000	353.0	353.0	32.0
TS3USB221RSER	UQFN	RSE	10	3000	210.0	185.0	35.0
TS3USB221RSER	UQFN	RSE	10	3000	189.0	185.0	36.0

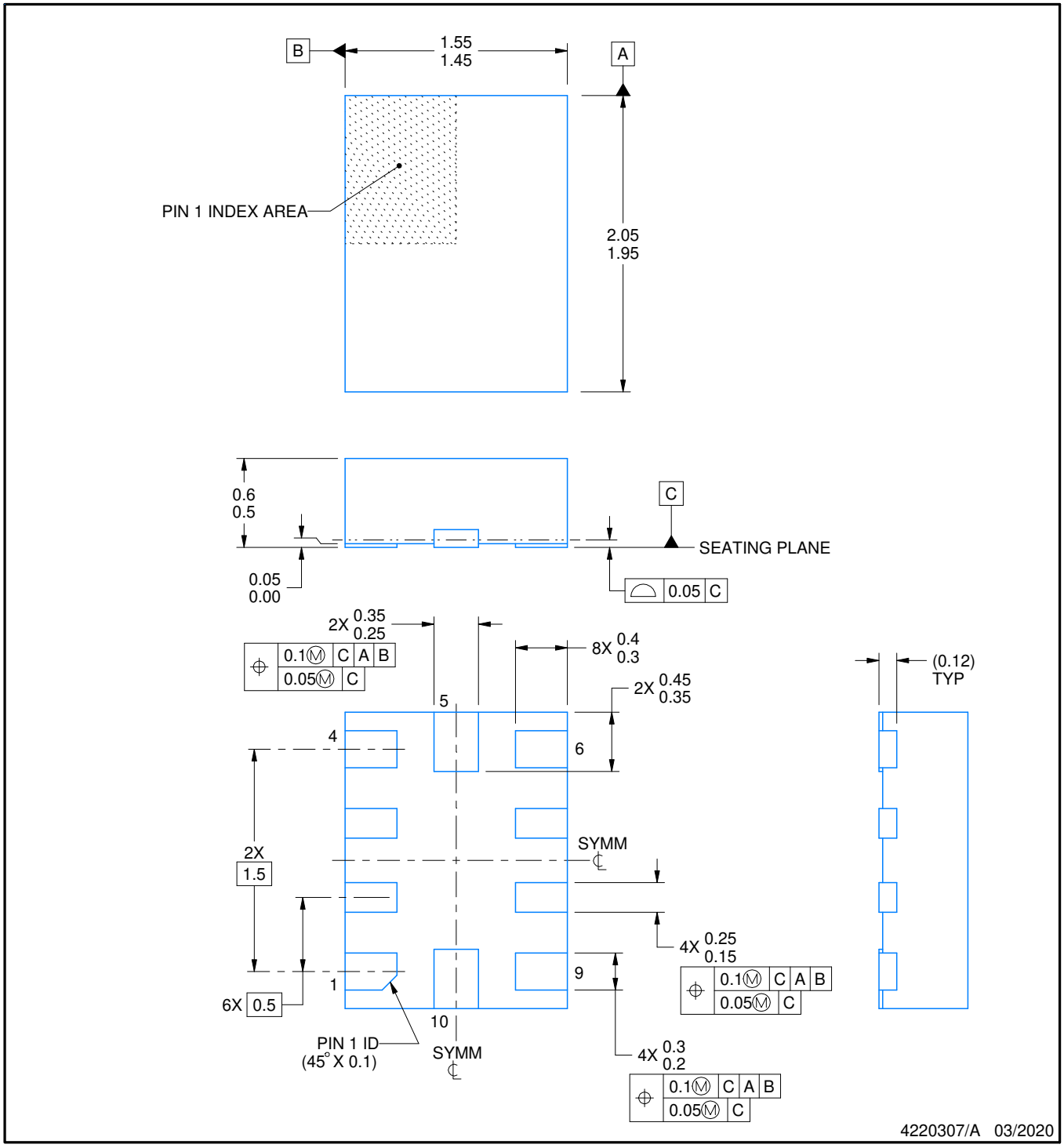

NOTES:

1. All linear dimensions are in millimeters. Any dimensions in parenthesis are for reference only. Dimensioning and tolerancing per ASME Y14.5M.
2. This drawing is subject to change without notice.

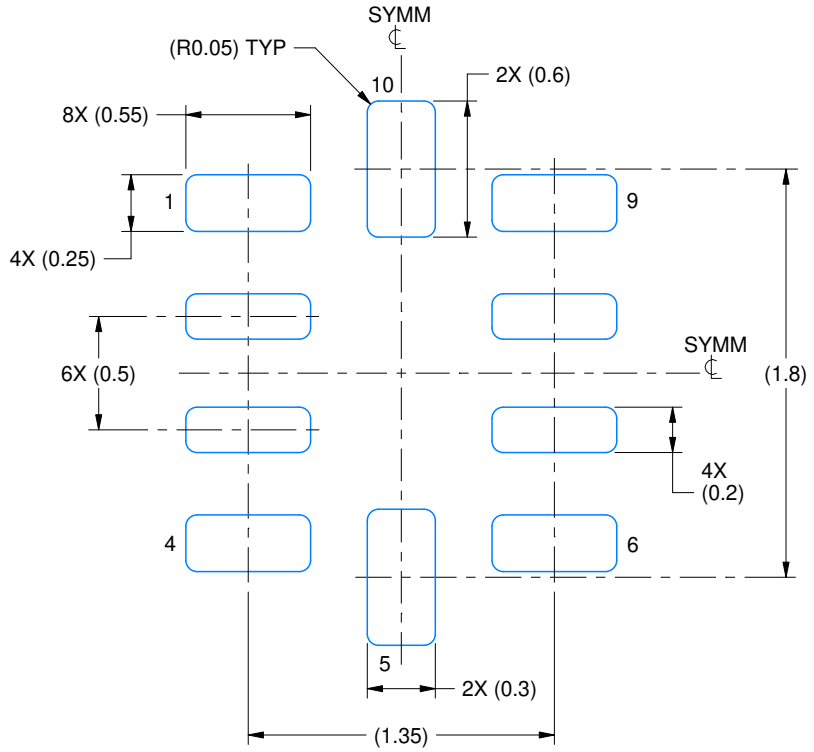

LAND PATTERN EXAMPLE
EXPOSED METAL SHOWN
SCALE:30X

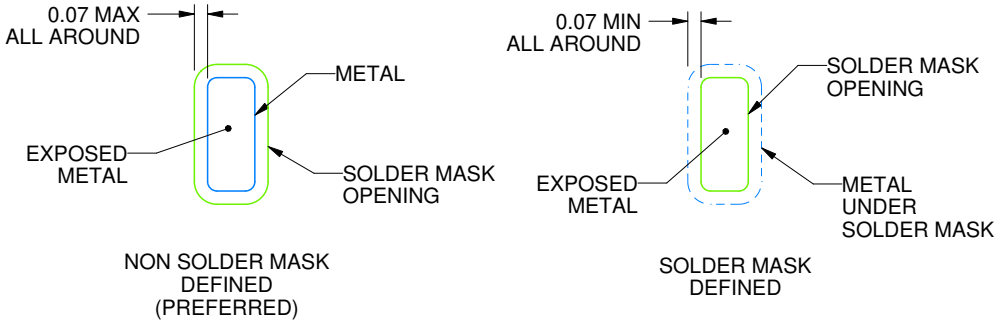

SOLDER MASK DETAILS
NOT TO SCALE

4220307/A 03/2020

NOTES: (continued)

3. For more information, see Texas Instruments literature number SLUA271 (www.ti.com/lit/slua271).

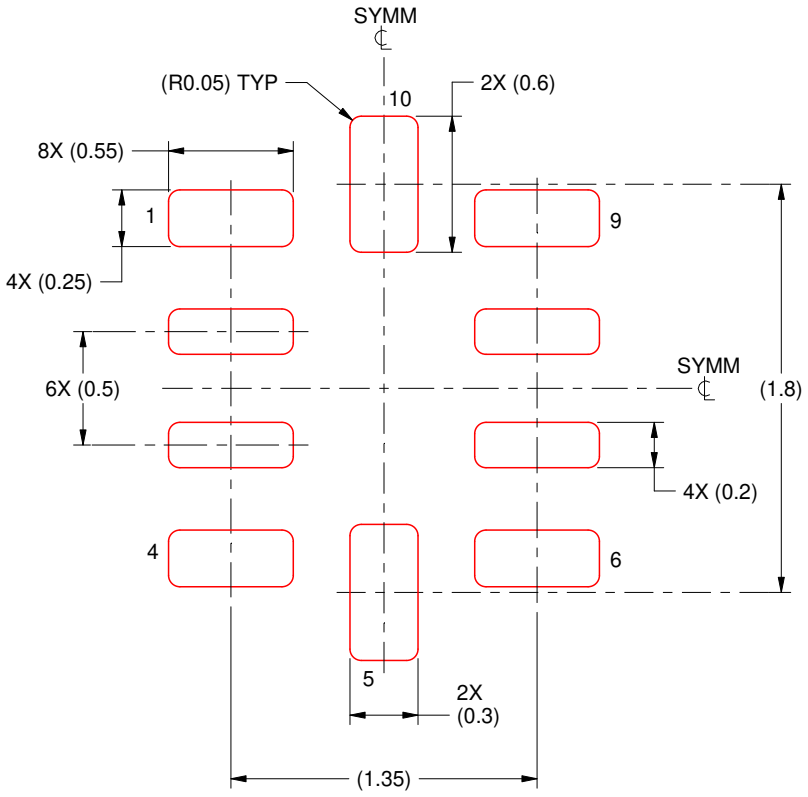

SOLDER PASTE EXAMPLE
BASED ON 0.1 mm THICKNESS
SCALE: 30X

4220307/A 03/2020

NOTES: (continued)

5. Laser cutting apertures with trapezoidal walls and rounded corners may offer better paste release. IPC-7525 may have alternate design recommendations.

GENERIC PACKAGE VIEW

DRC 10

VSON - 1 mm max height

3 x 3, 0.5 mm pitch

PLASTIC SMALL OUTLINE - NO LEAD

This image is a representation of the package family, actual package may vary.
Refer to the product data sheet for package details.

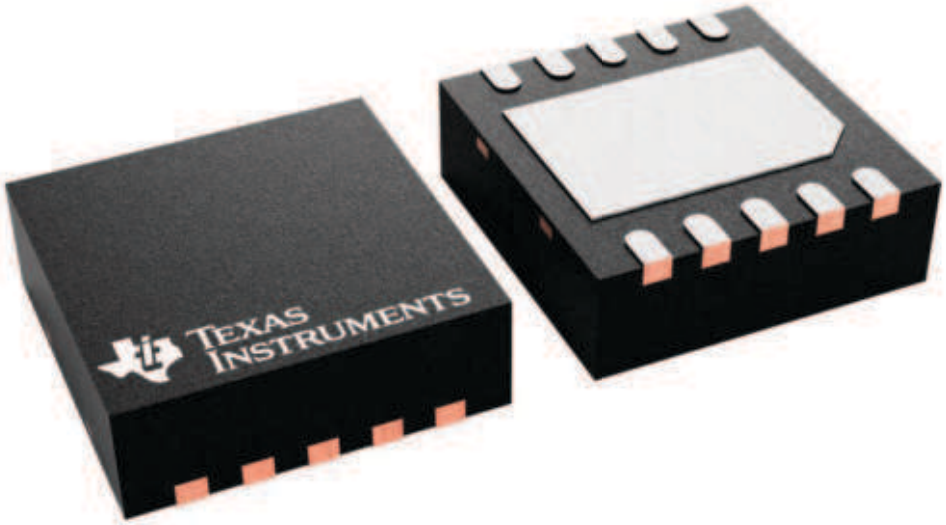

4226193/A

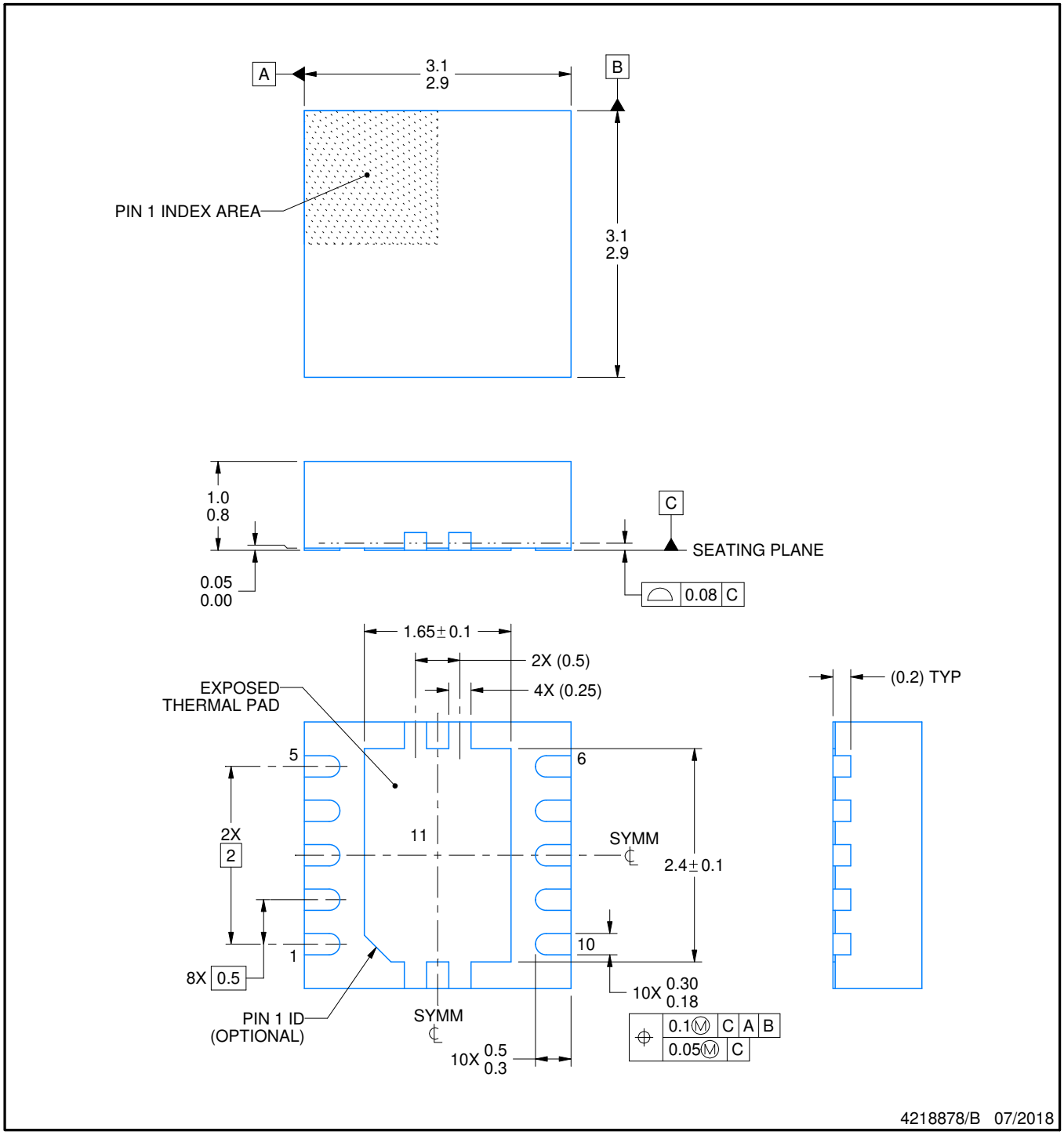

NOTES:

1. All linear dimensions are in millimeters. Any dimensions in parenthesis are for reference only. Dimensioning and tolerancing per ASME Y14.5M.
2. This drawing is subject to change without notice.
3. The package thermal pad must be soldered to the printed circuit board for optimal thermal and mechanical performance.

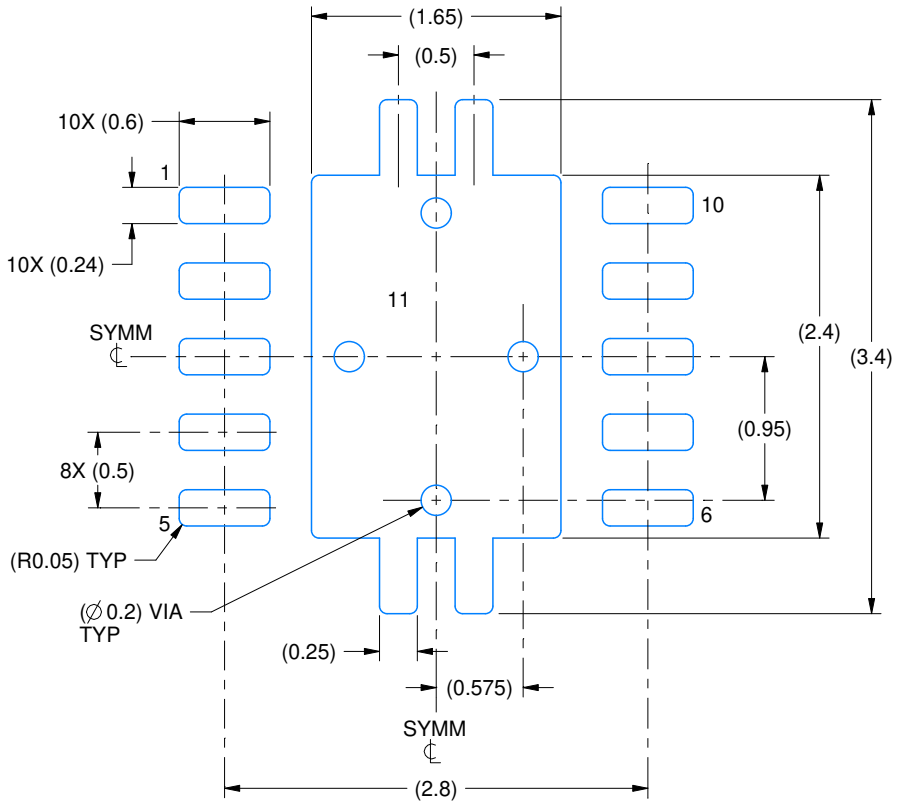

LAND PATTERN EXAMPLE
EXPOSED METAL SHOWN
SCALE:20X

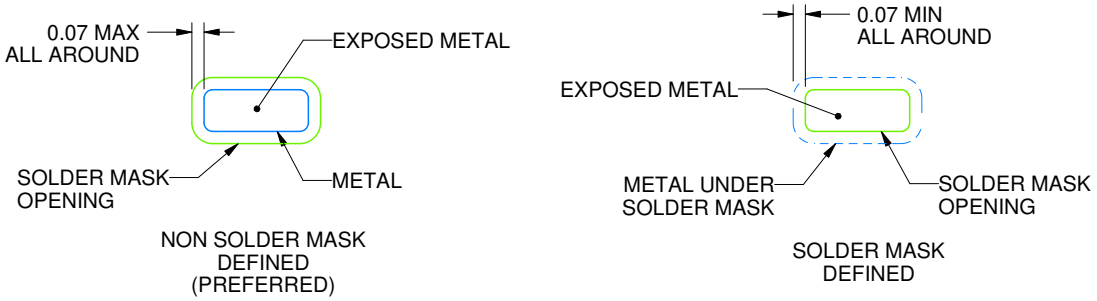

SOLDER MASK DETAILS

4218878/B 07/2018

NOTES: (continued)

4. This package is designed to be soldered to a thermal pad on the board. For more information, see Texas Instruments literature number SLUA271 (www.ti.com/lit/slua271).
5. Vias are optional depending on application, refer to device data sheet. If any vias are implemented, refer to their locations shown on this view. It is recommended that vias under paste be filled, plugged or tented.

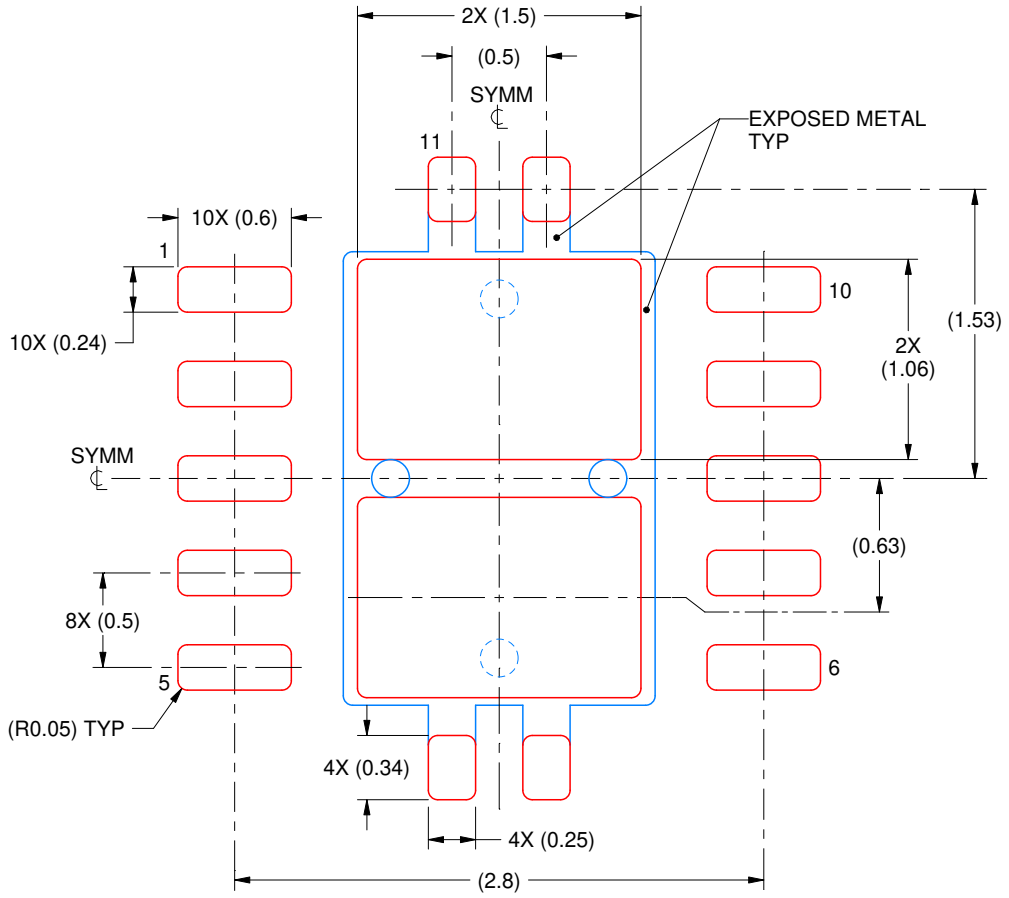

SOLDER PASTE EXAMPLE
BASED ON 0.125 mm THICK STENCIL

EXPOSED PAD 11:
80% PRINTED SOLDER COVERAGE BY AREA
SCALE:25X

4218878/B 07/2018

NOTES: (continued)

6. Laser cutting apertures with trapezoidal walls and rounded corners may offer better paste release. IPC-7525 may have alternate design recommendations.

IMPORTANT NOTICE AND DISCLAIMER

TI PROVIDES TECHNICAL AND RELIABILITY DATA (INCLUDING DATASHEETS), DESIGN RESOURCES (INCLUDING REFERENCE DESIGNS), APPLICATION OR OTHER DESIGN ADVICE, WEB TOOLS, SAFETY INFORMATION, AND OTHER RESOURCES “AS IS” AND WITH ALL FAULTS, AND DISCLAIMS ALL WARRANTIES, EXPRESS AND IMPLIED, INCLUDING WITHOUT LIMITATION ANY IMPLIED WARRANTIES OF MERCHANTABILITY, FITNESS FOR A PARTICULAR PURPOSE OR NON-INFRINGEMENT OF THIRD PARTY INTELLECTUAL PROPERTY RIGHTS.

These resources are intended for skilled developers designing with TI products. You are solely responsible for (1) selecting the appropriate TI products for your application, (2) designing, validating and testing your application, and (3) ensuring your application meets applicable standards, and any other safety, security, regulatory or other requirements.

These resources are subject to change without notice. TI grants you permission to use these resources only for development of an application that uses the TI products described in the resource. Other reproduction and display of these resources is prohibited. No license is granted to any other TI intellectual property right or to any third party intellectual property right. TI disclaims responsibility for, and you fully indemnify TI and its representatives against any claims, damages, costs, losses, and liabilities arising out of your use of these resources.

TI’s products are provided subject to TI’s Terms of Sale, TI’s General Quality Guidelines, or other applicable terms available either on ti.com or provided in conjunction with such TI products. TI’s provision of these resources does not expand or otherwise alter TI’s applicable warranties or warranty disclaimers for TI products. Unless TI explicitly designates a product as custom or customer-specified, TI products are standard, catalog, general purpose devices.

TI objects to and rejects any additional or different terms you may propose.

Copyright © 2026, Texas Instruments Incorporated

Last updated 10/2025