TSC2010H, TSC2011H, TSC2012H

Datasheet

High temperature, high voltage, precision, bidirectional current sense amplifiers



SO8

Product status link
TSC2010H, TSC2011H, TSC2012H

Features

- Wide common mode voltage: - 20 to 70 V
- Offset voltage: ± 200 µV max.
- 2.7 to 5.5 V supply voltage
- Different gain available
  - TSC2010H: 20 V/V
  - TSC2011H: 60 V/V
  - TSC2012H: 100 V/V
- Gain error: 0.3% max.
- Offset drift: 5 µV/°C max.
- Quiescent current: 20 µA in shutdown mode
- SO8 package
- -40 to +150 °C temperature range

Applications

- High-side current sensing
- Low-side current sensing
- Industrial process control
- Motor control
- Solenoid control

Description

The TSC2010H, TSC2011H and TSC2012H are precision bidirectional current sense amplifiers. They can sense the current thanks to a shunt resistor over a wide range of common mode voltages, from - 20 to + 70 V, whatever the supply voltage is. They are available with an amplifier gain of 20 V/V for TSC2010H, 60 V/V for TSC2011H and 100 V/V for TSC2012H.

They are able to sense very low drop voltages as low as 10 mV full scale minimizing the measurement error.

The TSC2010H, TSC2011H and TSC2012H can also be used in other functions such as: precision current measurement, overcurrent protection, current monitoring, and feedback loops.

This device fully operates over the broad supply voltage range from 2.7 to 5.5 V and over the industrial temperature range from -40 to 150 °C.

1 Diagram

Figure 1. **Block diagram**

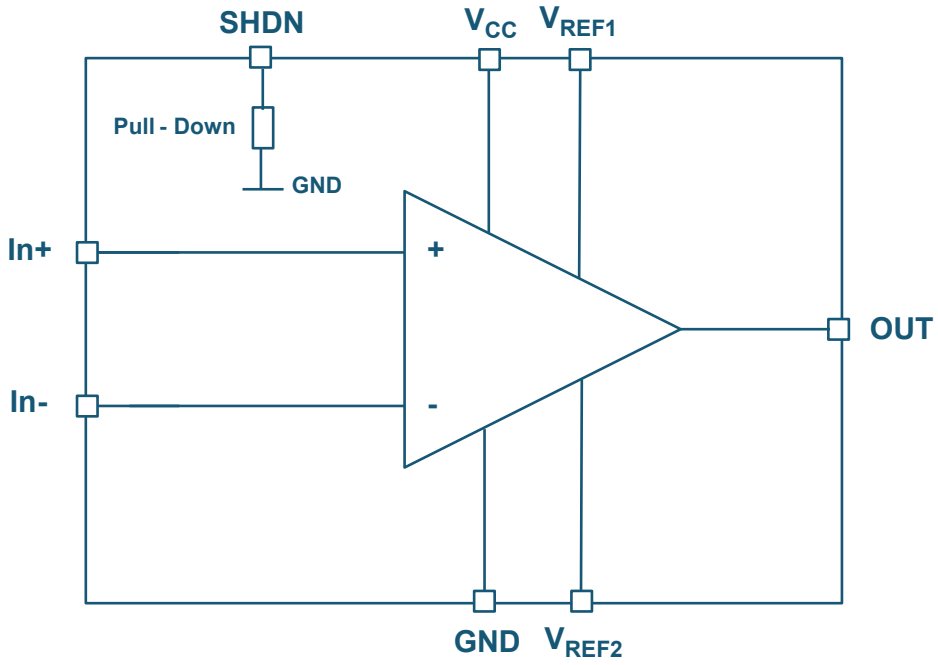

2 Pin configuration

Figure 2. **Pin connection (top view)**

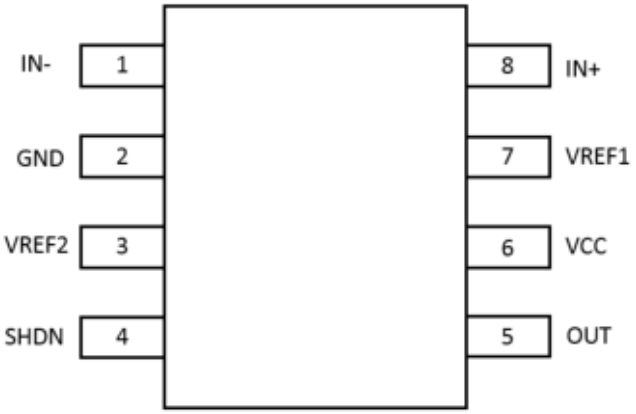

Table 1. **Pin description**

Pin	Pin name	Description
1	IN -	Negative input
2	GND	Ground
3	VREF2	Reference voltage 2
4	SHDN	Shutdown
5	OUT	Output
6	VCC	Supply voltage
7	VREF1	Reference voltage 1
8	IN +	Positive input

3 Maximum ratings

Table 2. Absolute maximum ratings

Symbol	Parameter	Value	Unit
V_{CC}	Supply voltage (1)	-0.3 to 7	V
V_{ICM}	Common mode voltage on input pins	-25 to 76	V
V_{DIF}	Differential voltage between input pins (In+, In-)	7	V
V_{REF1} V_{REF2} V_{OUT}	Voltage present on pins REF1, REF2, OUT	Gnd - 0.3 to V_{cc} + 0.3	V
I_{IN}	Input current to any pins (2)	5	mA
T_{STG}	Storage temperature	-65 to 150	°C
T_J	Junction temperature	160	°C
R_{THJA}	Thermal resistance junction to ambient (3)(4) SO8	125	°C/W
ESD	Human body model (HBM) (5)	2000	V
	Charged device model (CDM) (6)	1000	

1. *All voltage values, except the differential voltage are with respect to the network ground terminal.*
2. *Input voltage can go beyond supply voltage but input current must be limited. Using a serial resistor with the input is highly recommended in that case.*
3. *Short-circuits can cause excessive heating and destructive dissipation.*
4. *R_{th} are typical values.*
5. *According to JEDEC standard JESD22-A114F.*
6. *According to ANSI/ESD STM5.3.1.*

Table 3. Operating conditions

Symbol	Parameter	Value	Unit
V_{cc}	Supply voltage	2.7 to 5.5	V
V_{icm}	Common mode voltage on input pins	-20 to +70	V
V_{ref}	Output offset adjustment range	0 to V_{cc}	V
T	Operating free-air temperature range	-40 to 150	°C

4 Electrical characteristics

Table 4. Electrical characteristics V_{cc} = 2.7 V, V_{icm} = 12 V, T = 25 °C (unless otherwise specified)

Symbol	Parameter	Conditions	Min.	Typ.	Max.	Unit
Power supply						
I_{cc}	Current consumption	V_{icm} = -20 to 70 V		1.5	2.3	mA
		$T_{min} < T < T_{max}$			2.3	
	Current consumption with shutdown active	V_{icm} = -20 to 70 V		20	50	µA
		$T_{min} < T < T_{max}$			150	
Input						
$\|V_{os}\|$	Offset voltage (RTI) (1)	V_{icm} = 1 V			200	µV
		$T_{min} < T < T_{max}$			825	
		V_{icm} = 12 V			500	
		$T_{min} < T < T_{max}$			1300	
$\|\Delta V_{os}/\Delta T\|$	Offset drift vs. temperature	V_{icm} = 1 V, $T_{min} < T < T_{max}$			5	µV/°C
		V_{icm} = 12 V, $T_{min} < T < T_{max}$			8	
CMR	Common mode rejection	V_{icm} = -20 to 70 V, DC mode	90	115		dB
		$T_{min} < T < T_{max}$	80			
I_{ib+}	Input bias current	V_{icm} = 12 V		350		µA
		$T_{min} < T < T_{max}$, V_{icm} = -20 to 70 V	-400		600	
I_{ib-}	Input bias current	V_{icm} = 12 V		100		
		$T_{min} < T < T_{max}$, V_{icm}= -20 to 70 V	-150		350	
$\|V_{sense}\|$	V_{sense} operating range with Eg ≤ 0.3% (2)	TSC2010H			123.6	mV
		$T_{min} < T < T_{max}$			122.4	
		TSC2011H			40.5	
		$T_{min} < T < T_{max}$			39.3	
		TSC2012H			23.9	
		$T_{min} < T < T_{max}$			22.7	
Output						
G	Gain	TSC2010H		20		V/V
		TSC2011H		60		
		TSC2012H		100		
Eg	Gain error vs. temperature	ΔV_{out} = 100 mV to (V_{cc} - 100 mV)			0.3	%
		$T_{min} < T < T_{max}$			0.3	
ΔEg/ΔT	Gain error drift	$T_{min} < T < T_{max}$			25	ppm/°C
NLE	Linearity error	V_{icm} = 12 V		0.03		%
V_{cc} - V_{oh}	Drop voltage output high	I_{source} = 0.2 mA		8	15	mV
		$T_{min} < T < T_{max}$			20	

Symbol	Parameter	Conditions	Min.	Typ.	Max.	Unit
V_{ol}	Output voltage low	I_{sink} = 0.2 mA $T_{min} < T < T_{max}$		12	20 30	mV
I_{out}	Output current	Sink mode $T_{min} < T < T_{max}$	12 8	20	25 30	mA
		Source mode $T_{min} < T < T_{max}$	6 4	10	14 17	
Reg Load	Load regulation	I_{out} = -10 to +4 mA		0.3	1.5	mV/mA
OFFSET adjustment						
R_t	Ratiometric accuracy			0.5		V/V
Acc	Accuracy, RTO	Voltage applied to Vref1 and Vref2 in parallel		0.1		%
Dynamic performances						
BW	Small signal -3 dB bandwidth	R_l = 10 kΩ, C_l = 100 pF				kHz
		TSC2010H	600	750		
		TSC2010H, $T_{min} < T < T_{max}$	270			
		TSC2011H	500	620		
		TSC2011H, $T_{min} < T < T_{max}$	225			
		TSC2012H	330	415		
		TSC2012H, $T_{min} < T < T_{max}$	150			
SR	Slew rate	R_l = 10 kΩ, C_l = 100 pF, V_{icm} = 1 V				V/µs
		TSC2010H, Vsense = 120 mV	3.0	3.9		
		TSC2010H, $T_{min} < T < T_{max}$	2.25			
		TSC2011H, Vsense = 40 mV	2.7	3.5		
		TSC2011H, $T_{min} < T < T_{max}$	2.1			
		TSC2012H, Vsense = 24 mV	2.0	2.8		
		TSC2012H, $T_{min} < T < T_{max}$	1.5			
E_n	Noise, RTI Spectral density, RTI	0.1 Hz to 10 Hz f = 1 kHz		37 100		µVpp nV/√Hz
Shutdown function (active high)						
V_{il}	Logical low level		0		0.3xV_{cc}	V
V_{ih}	Logical high level		0.7xV_{cc}		V_{cc}	
I_{ih}	Leakage current	V_{shdn} = V_{cc} (shutdown mode)		0.9		µA
T_{on}	Turn-on time	V_{shdn} = 2.7 V to 0 V, R_l = 10 kΩ				µs
		TSC2011H		6		
		TSC2010H, TSC2012H		8		
T_{off}	Turn-off time	V_{shdn} = 0 V to 2.7 V, R_l = 10 kΩ				µs
		TSC2011H		4		
		TSC2010H, TSC2012H		5		

Symbol	Parameter	Conditions	Min.	Typ.	Max.	Unit
I_{out}	Output leakage current	Shdn active		50		nA

1. *RTI stands for "Related to input".*
2. *$V_{sense}=(V_{in+}) – (V_{in-})$.*

Table 5. Electrical characteristics (V_{cc} = 5 V, V_{icm} = 12 V, T = 25 °C unless otherwise specified)

Symbol	Parameter	Conditions	Min.	Typ.	Max.	Unit
Power supply						
I_{cc}	Current consumption	V_{icm} = -20 to 70 V $T_{min} < T < T_{max}$		1.6	2.4 2.4	mA
	Current consumption with shutdown active	V_{icm} = -20 to 70 V $T_{min} < T < T_{max}$		20	50 150	µA
SVR	Supply voltage rejection	V_{cc} = 2.7 to 5.5 V $T_{min} < T < T_{max}$	80 75	100		dB
Input						
$\|V_{os}\|$	Offset voltage (RTI) (1)	V_{icm} = 1 V $T_{min} < T < T_{max}$			200 825	µV
		V_{icm} = 12 V $T_{min} < T < T_{max}$			500 1300	
$\|\Delta V_{os}/\Delta T\|$	Offset drift vs. temperature	V_{icm} = 1 V, $T_{min} < T < T_{max}$			5	µV/°C
		V_{icm} = 12 V, $T_{min} < T < T_{max}$			8	
CMR	Common mode rejection	V_{icm} = -20 to 70 V, DC mode $T_{min} < T < T_{max}$	90 80	120		dB
I_{ib+}	Input bias current	V_{icm} = 12 V $T_{min} < T < T_{max}$, V_{icm} = -20 to 70 V	-400	350	600	µA
I_{ib-}	Input bias current	V_{icm} = 12 V $T_{min} < T < T_{max}$, V_{icm}= -20 to 70 V	-150	100	350	
$\|V_{sense}\|$	V_{sense} operating range with Eg ≤ 0.3% (2)	TSC2010H $T_{min} < T < T_{max}$			238.3 237.1	mV
		TSC2011H $T_{min} < T < T_{max}$			78 77.6	
		TSC2012H $T_{min} < T < T_{max}$			46.9 45.7	
Output						
G	Gain	TSC2010H		20		V/V
		TSC2011H		60		
		TSC2012H		100		
Eg	Gain error vs. temperature	ΔV_{out} = 100 mV to (V_{cc} - 100 mV) $T_{min} < T < T_{max}$			0.3 0.3	%
ΔEg/ΔT	Gain error drift	$T_{min} < T < T_{max}$			25	ppm/°C
NLE	Linearity error	V_{icm} = 12 V		0.03		%
V_{cc} - V_{oh}	Drop voltage output high	I_{source} = 0.2 mA $T_{min} < T < T_{max}$		15	30 35	mV
V_{ol}	Output voltage low	I_{sink} = 0.2 mA $T_{min} < T < T_{max}$		26	40 50	mV

Symbol	Parameter	Conditions	Min.	Typ.	Max.	Unit
I_{out}	Output current	Sink mode	25	36	50	mA
		$T_{min} < T < T_{max}$	15		60	
		Source mode	12	25	45	
		$T_{min} < T < T_{max}$	8		55	
Reg Load	Load regulation	I_{out} = -10 to +10 mA		0.3	1.5	mV/mA
OFFSET adjustment						
R_t	Ratiometric accuracy			0.5		V/V
Acc	Accuracy, RTO	Voltage applied to Vref1 and Vref2 in parallel		0.1		%
Dynamic performance						
BW	Small signal -3 dB bandwidth	R_l = 10 kΩ, C_l = 100 pF				kHz
		TSC2010H	650	820		
		TSC2010H, $T_{min} < T < T_{max}$	300			
		TSC2011H	600	750		
		TSC2011H, $T_{min} < T < T_{max}$	270			
		TSC2012H	390	490		
		TSC2012H, $T_{min} < T < T_{max}$	180			
SR	Slew rate	R_l = 10 kΩ, C_l = 100 pF, V_{icm} = 1 V				V/µs
		TSC2010H, Vsense = 230 mV	5.7	7.5		
		TSC2010H, $T_{min} < T < T_{max}$	3.6			
		TSC2011H, Vsense = 78 mV	5.4	7		
		TSC2011H, $T_{min} < T < T_{max}$	3.4			
		TSC2012H, Vsense = 47 mV	4.4	5.2		
		TSC2012H, $T_{min} < T < T_{max}$	2.6			
E_n	Noise, RTI	0.1 Hz to 10 Hz		37		µVpp
	Spectral density, RTI	f = 1 kHz		100		nV/√Hz
Shutdown function (active high)						
V_{il}	Logical low level		0		$0.3xV_{cc}$	V
V_{ih}	Logical high level		$0.7xV_{cc}$		V_{cc}	
I_{ih}	Leakage current	$V_{shdn} = V_{cc}$ (shutdown mode)		1.2		µA
T_{on}	Turn-on time	V_{shdn}= 5 V to 0 V, R_l = 10 kΩ				µs
		TSC2011H		6		
		TSC2010H, TSC2012H		8		
T_{off}	Turn-off time	V_{shdn} = 0 V to 5 V, R_l= 10 kΩ				µs
		TSC2011H		4		
		TSC2010H, TSC2012H		5		
I_{out}	Output leakage current	Shdn active		50		nA

1. *RTI stands for "Related to input".*
2. $V_{sense} = (V_{in+}) - (V_{in-})$.

4.1 Typical characteristics

The TSC2011H is used for typical characteristics, unless otherwise noted.

Figure 3. Supply current vs. supply voltage

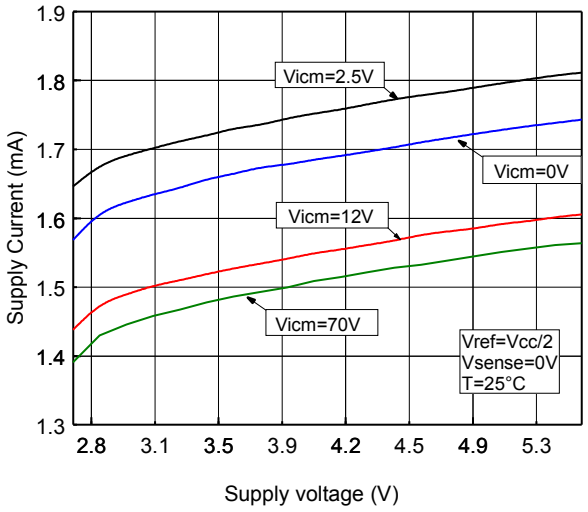

Figure 4. Supply current vs. input common mode

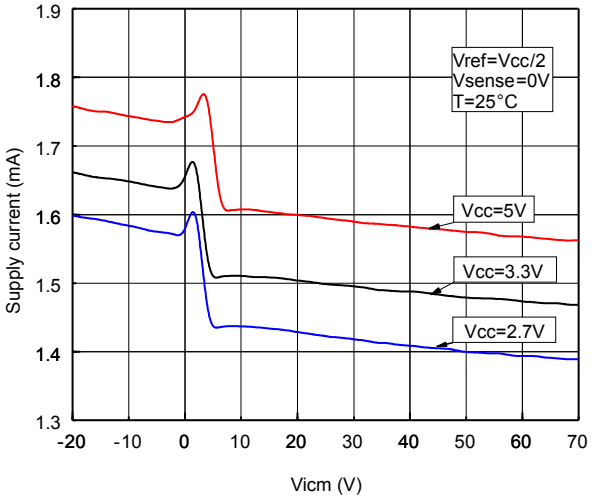

Figure 5. Supply current vs. temperature

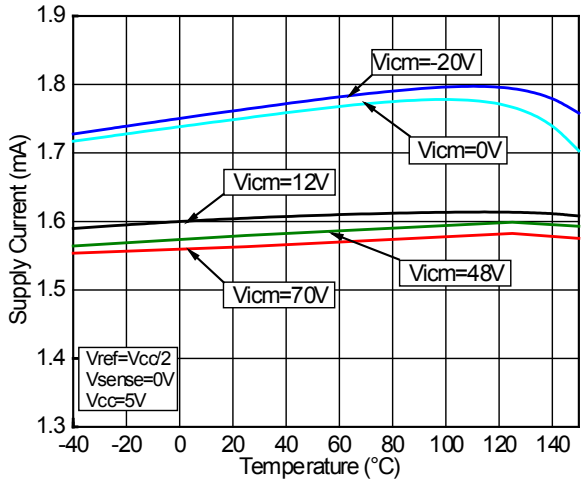

Figure 6. Supply current vs. input common mode with active shutdown mode

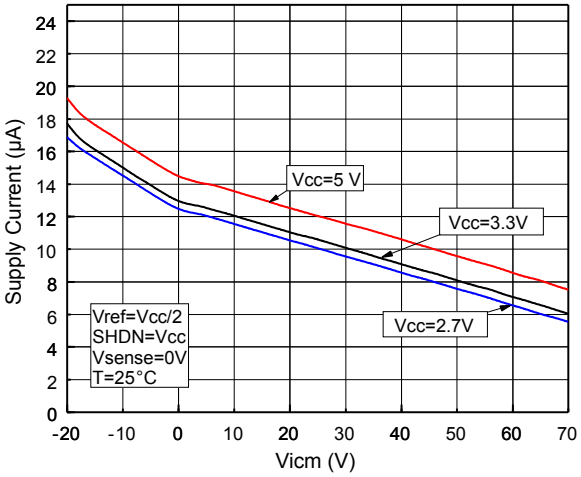

Figure 7. Input bias current vs. input common mode with shutdown active

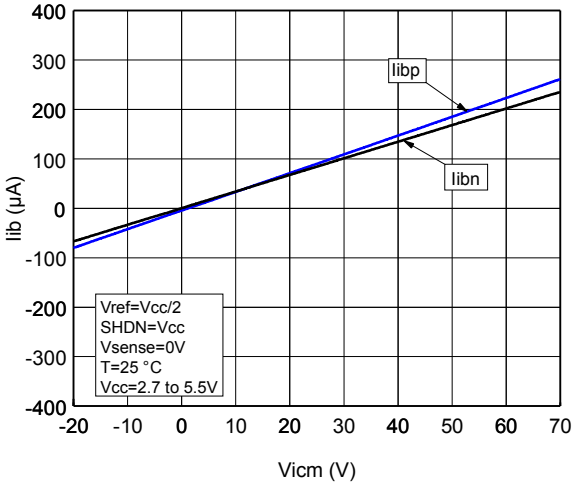

Figure 8. Input bias current vs. temperature V_{CC} = 2.7 V

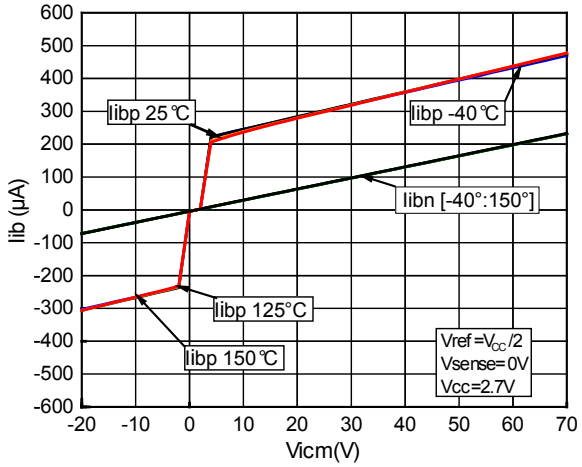

Figure 9. Input bias current vs. temperature with V_{CC} = 5 V

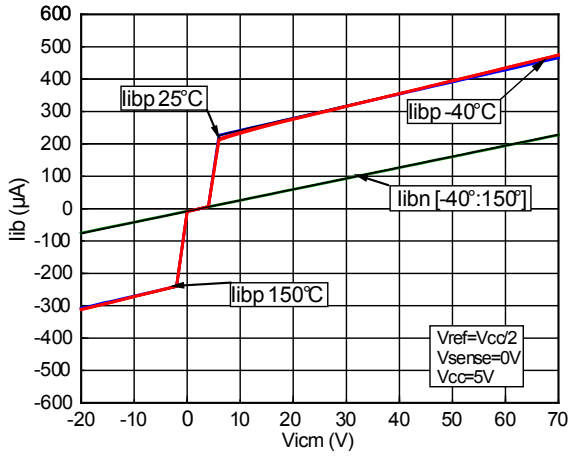

Figure 10. Input offset voltage vs. temperature

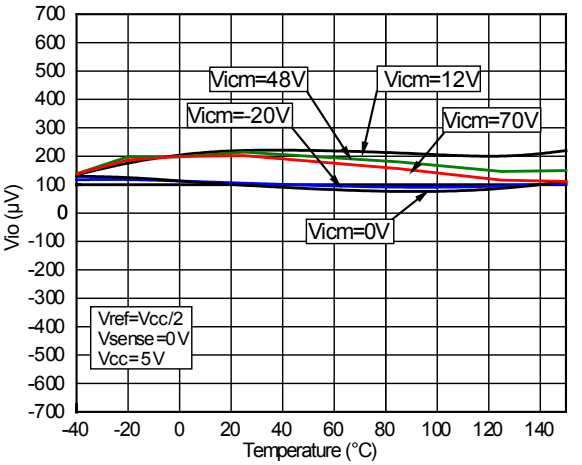

Figure 11. Input offset voltage vs. input common mode with V_{CC} = 2.7 V

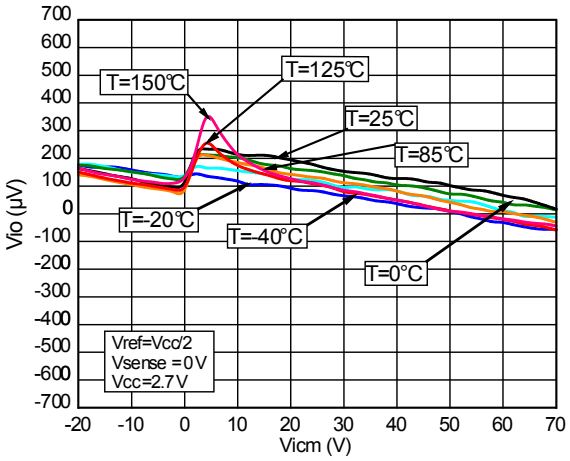

Figure 12. Input offset voltage vs. input common mode with V_{CC} = 5 V

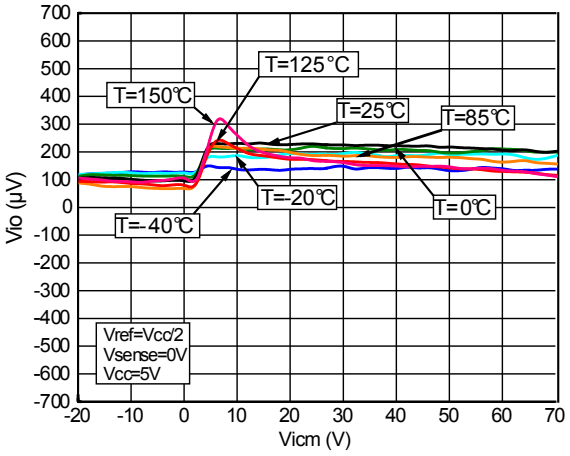

Figure 13. Input offset voltage vs. supply voltage

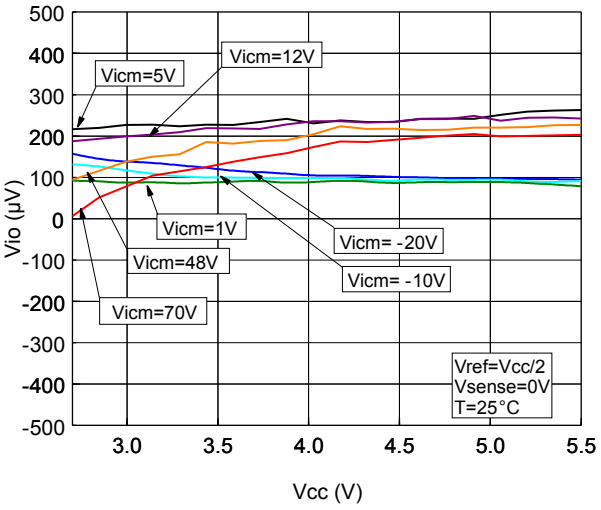

Figure 14. Output current vs. output voltage

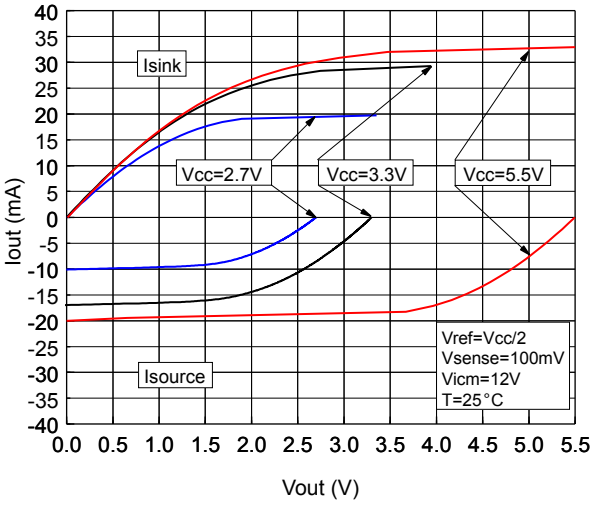

Figure 15. Output current vs. temperature with V_{CC} = 5 V

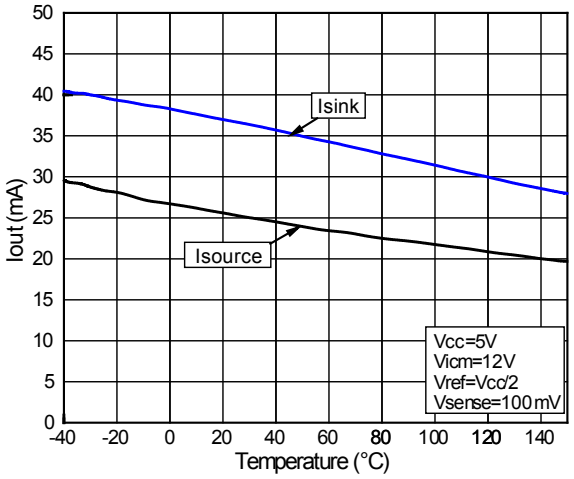

Figure 16. Output current vs. temperature with V_{CC} = 2.7 V

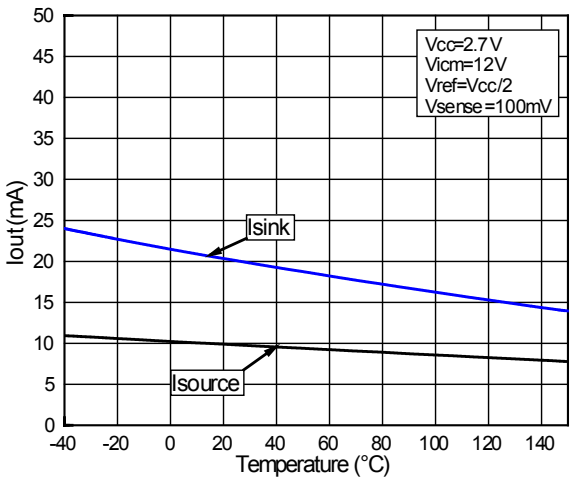

Figure 17. V_{oh} and V_{ol} vs. input common mode voltage with V_{CC} = 5 V

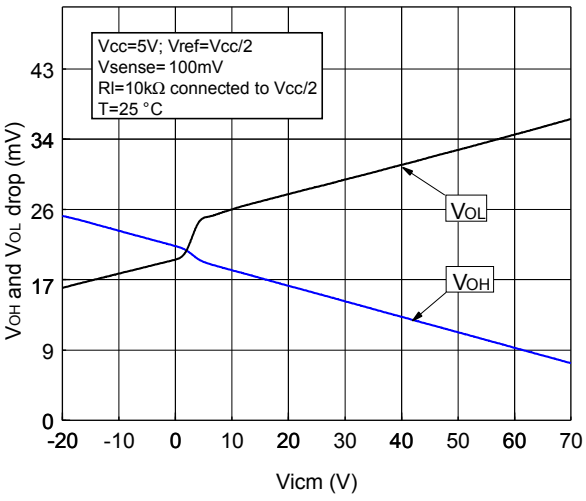

Figure 18. (Output voltage + V_{ref}) vs. V_{sense} unidirectional with V_{CC} = 5 V

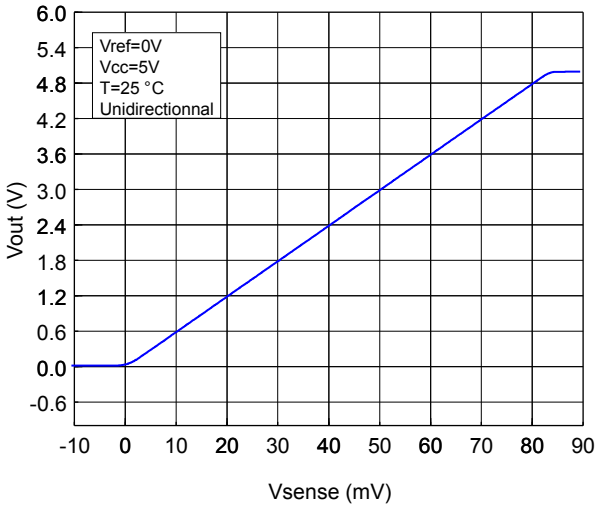

Figure 19. (Output voltage + V_{ref}) vs. V_{sense} bidirectional with V_{CC} = 5 V

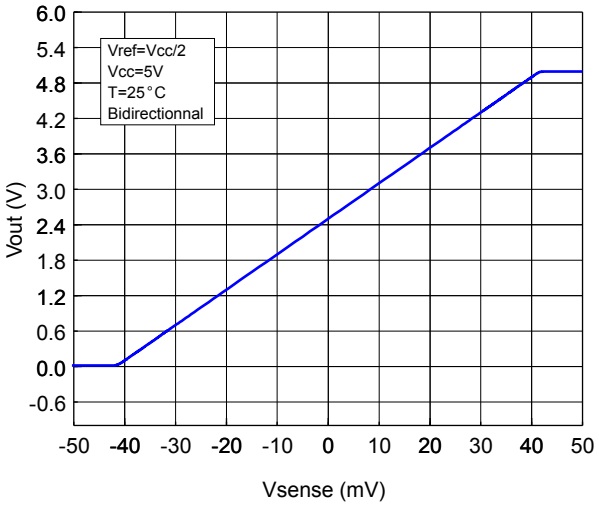

Figure 20. Output rail linearity vs. load with V_{CC} = 5 V

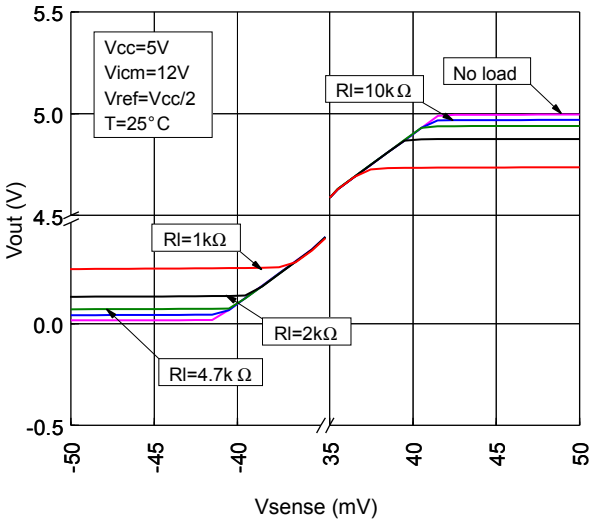

Figure 21. Linearity vs. V_{sense} with V_{CC} = 5 V

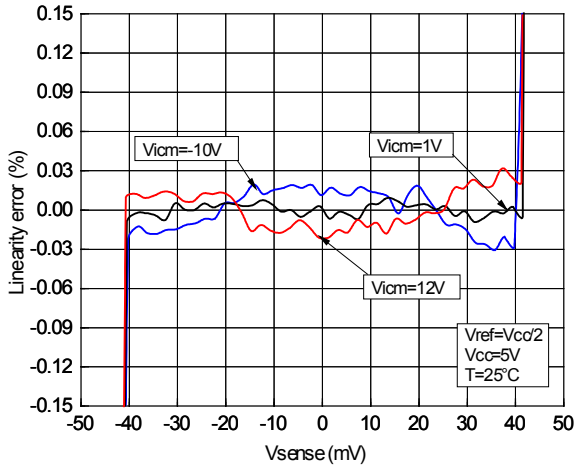

Figure 22. Linearity vs. V_{sense} and temperature

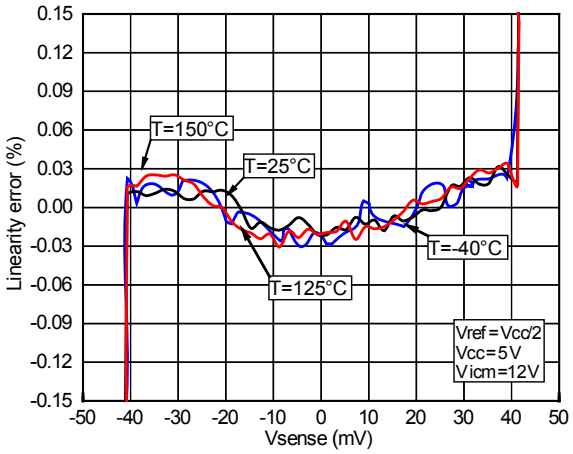

Figure 23. Gain error vs. input common mode

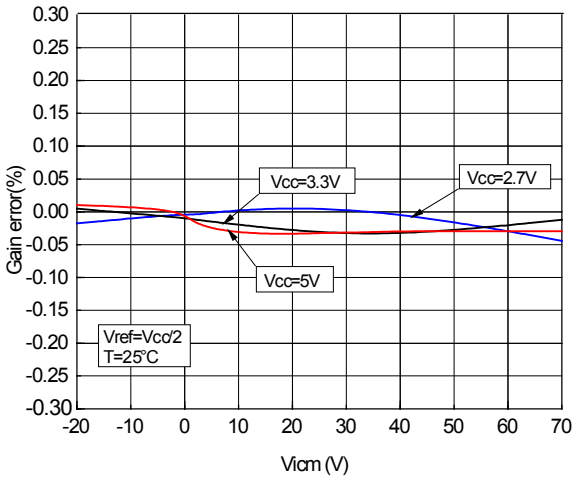

Figure 24. Gain error vs. input common mode and temperature

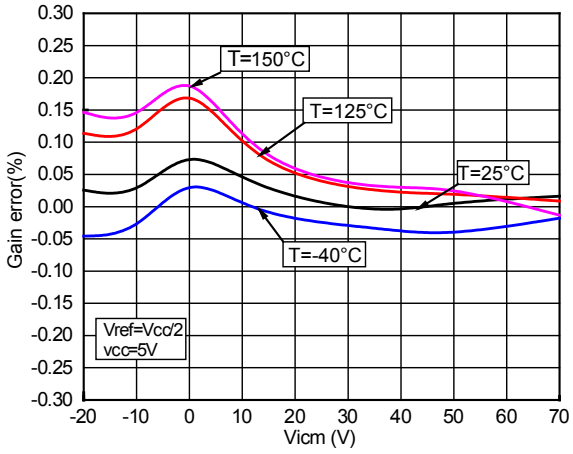

Figure 25. Load regulation with V_{CC} = 5 V

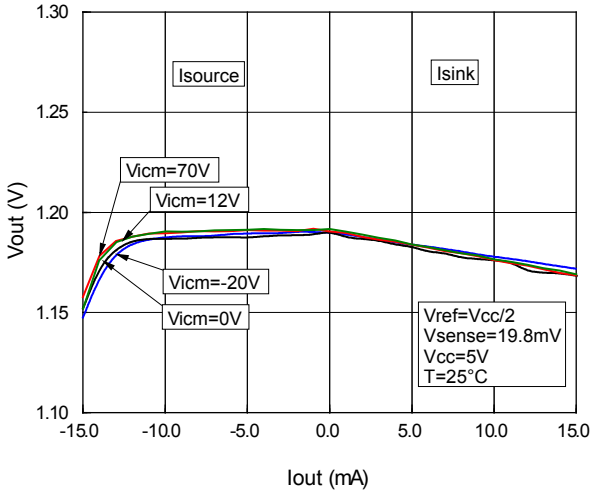

Figure 26. Gain vs. frequency

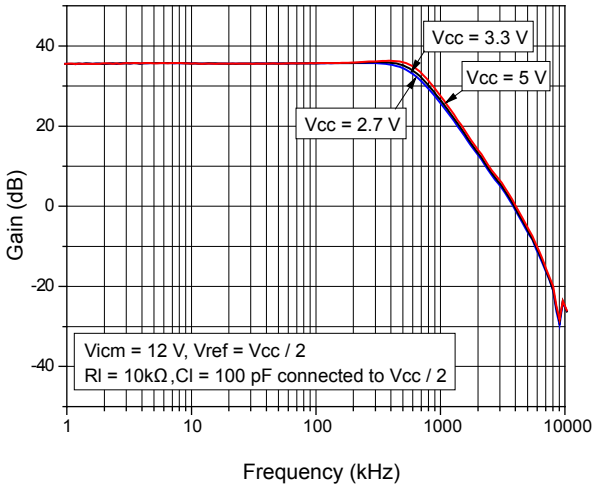

Figure 27. Gain vs. frequency V_{CC} = 5 V

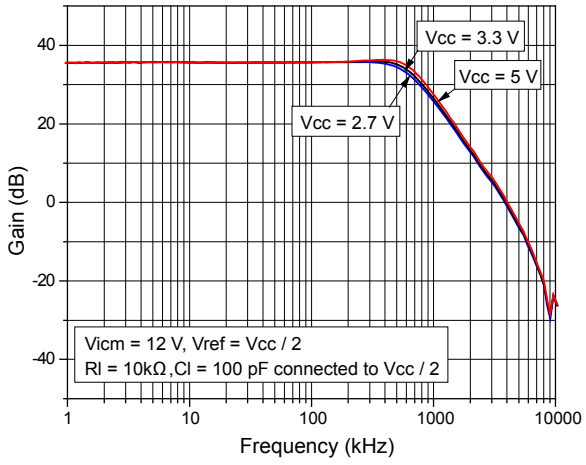

Figure 28. Gain vs. frequency different capacitive load

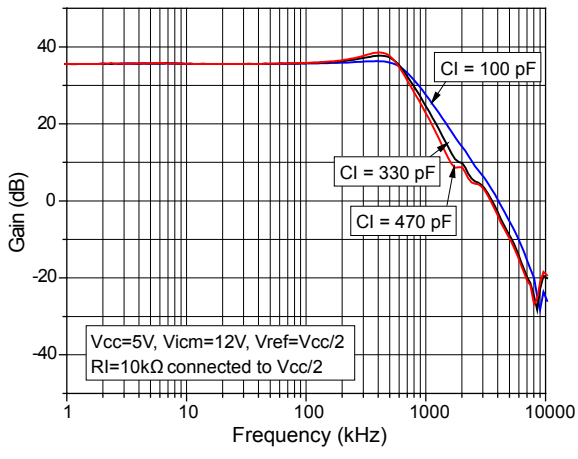

Figure 29. Gain vs. frequency different capacitive load (TSC2010H)

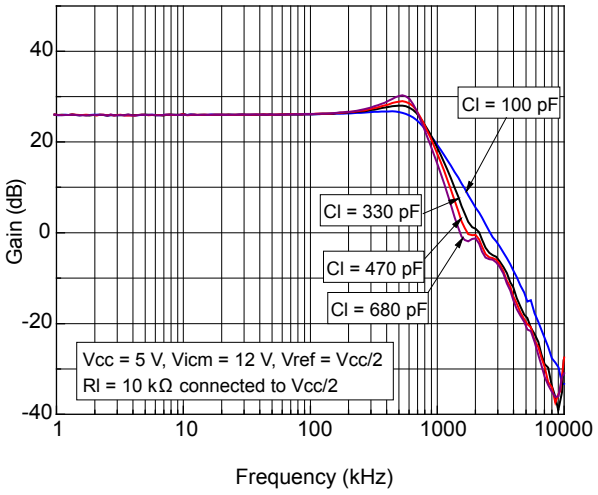

Figure 30. Gain vs. frequency different capacitive load (TSC2012H)

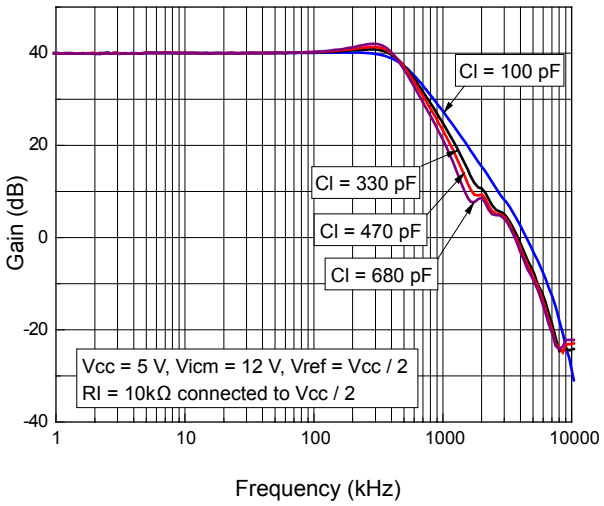

Figure 31. Bandwidth vs. input common mode

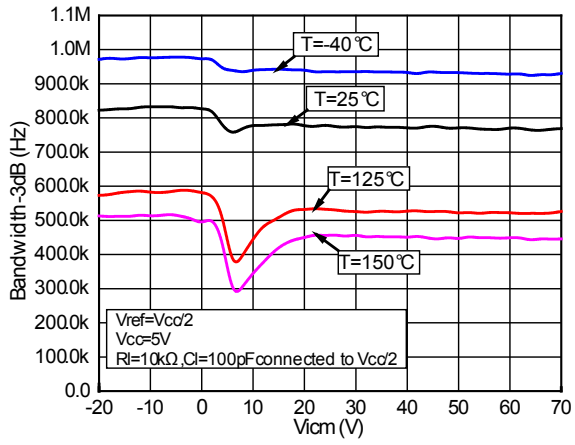

Figure 32. Bandwidth vs. input common mode (TSC2010H)

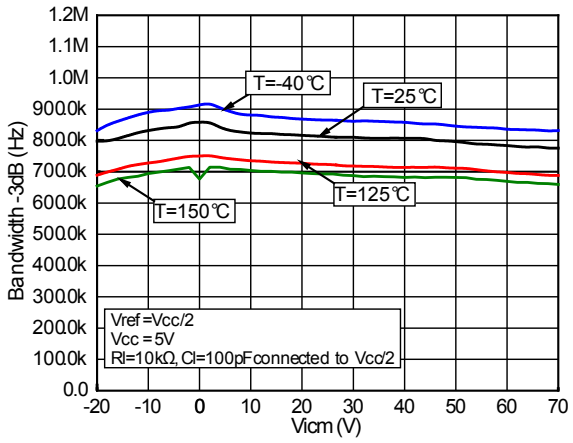

Figure 33. Bandwidth vs. input common mode (TSC2012H)

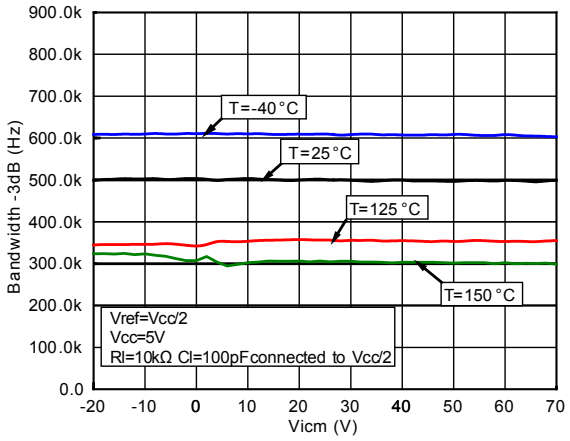

Figure 34. Overshoot vs. capacitive load

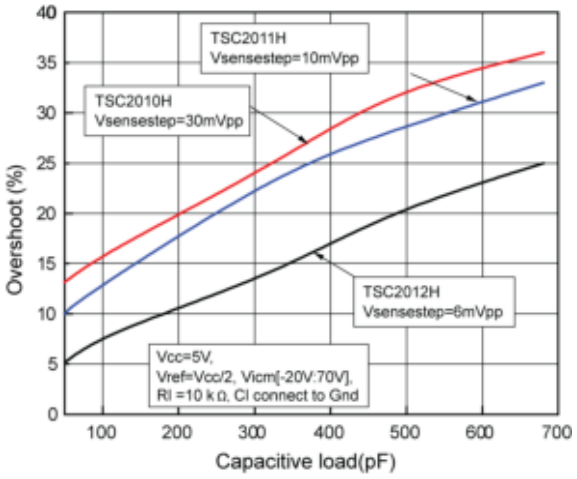

Figure 35. Small signal response with V_{CC} = 5 V

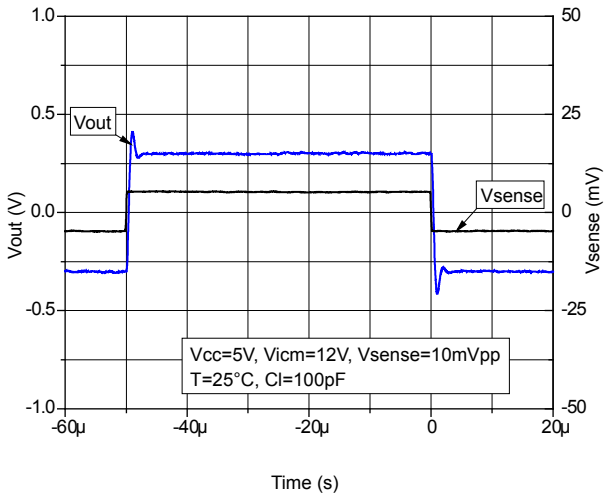

Figure 36. Small signal response with V_{CC} = 5 V (TSC2010H)

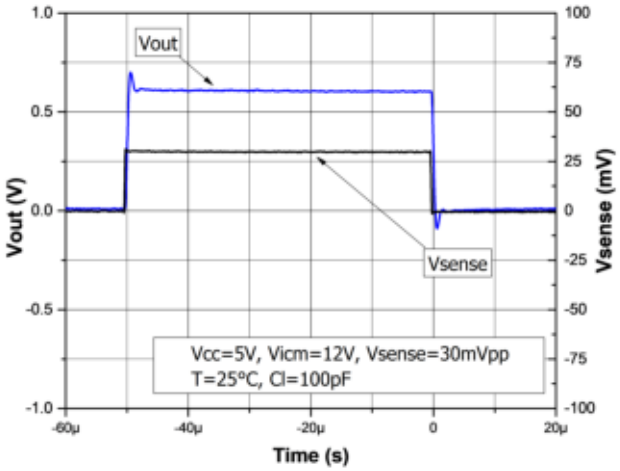

Figure 37. Small signal response with V_{CC} = 5 V (TSC2012H)

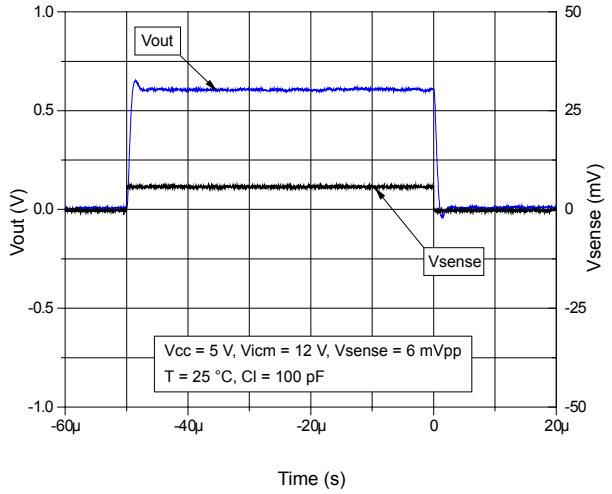

Figure 38. Small signal response with V_{CC} = 2.7 V

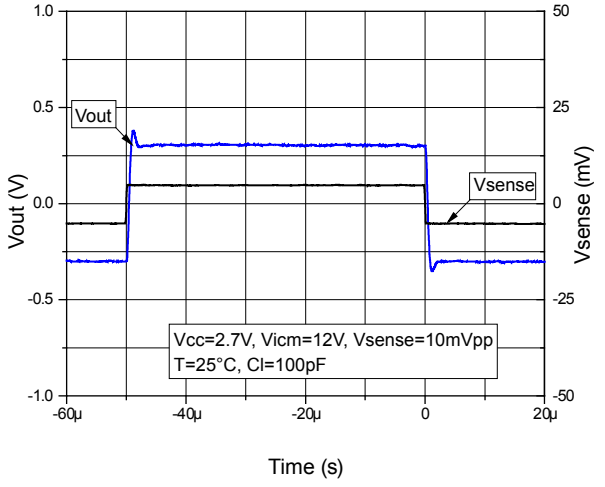

Figure 39. Large signal response with V_{CC} = 5 V

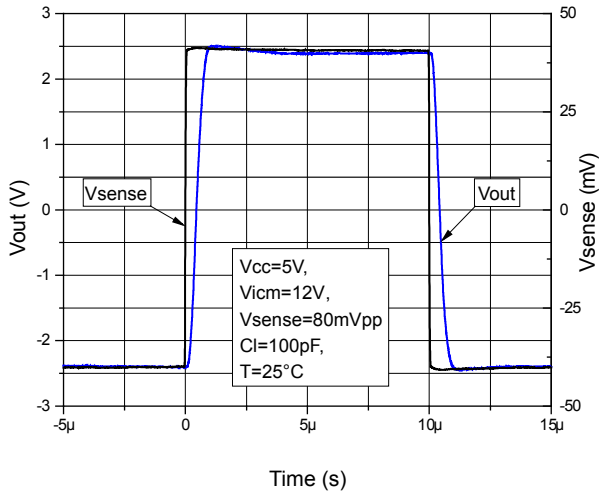

Figure 40. Large signal response with V_{CC} = 5 V (TSC2010H)

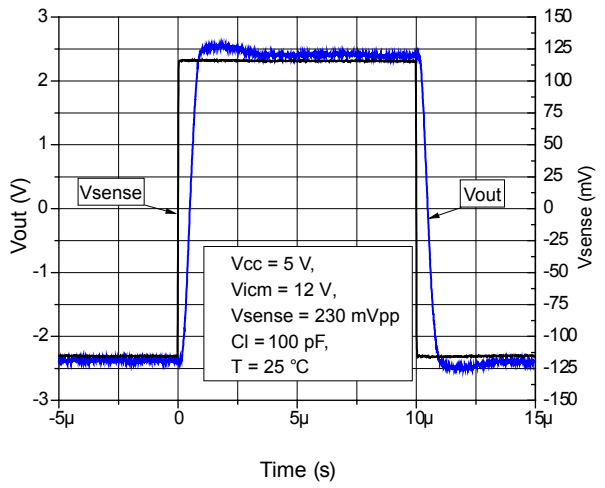

Figure 41. Large signal response with V_{CC} = 5 V (TSC2012H)

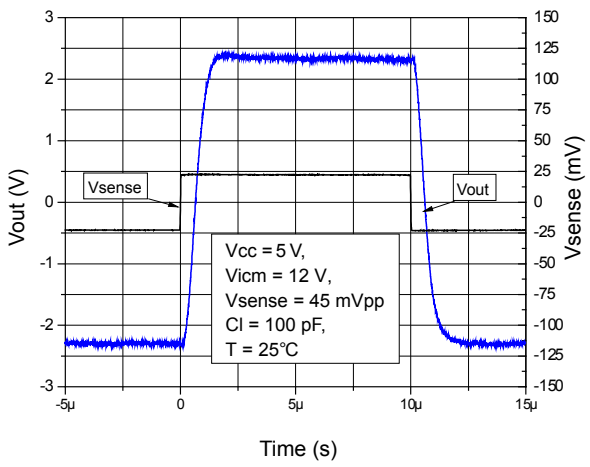

Figure 42. Large signal response with V_{CC} = 2.7 V

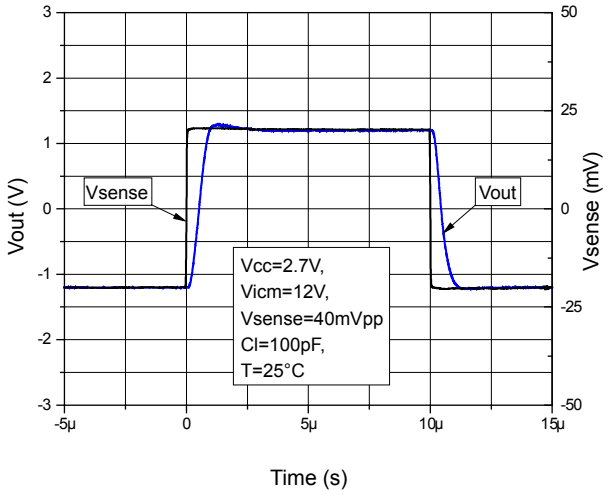

Figure 43. 12 V common mode step response recovery

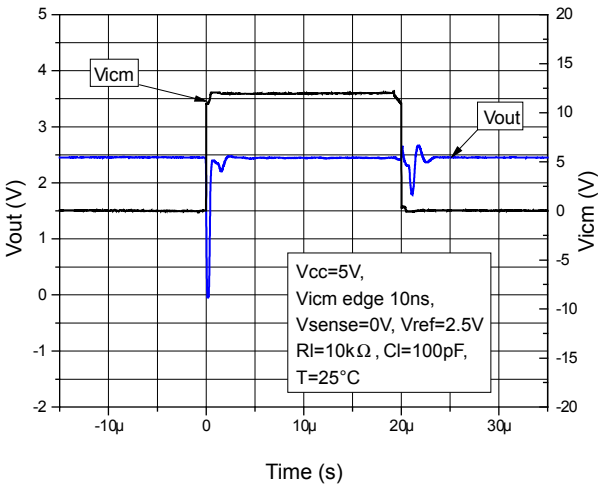

Figure 44. 50 V common mode step response recovery

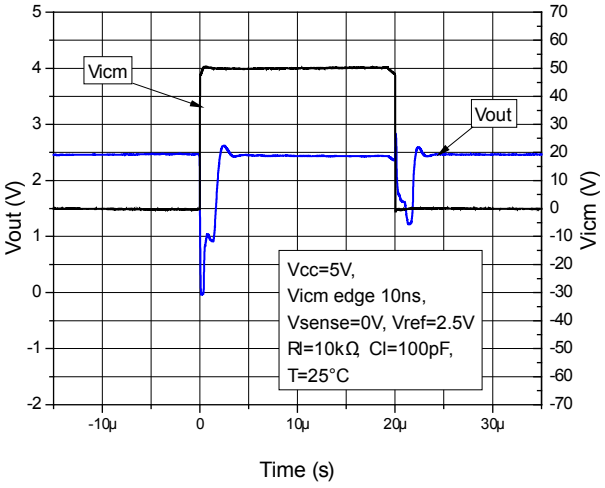

Figure 45. PSRR vs. frequency

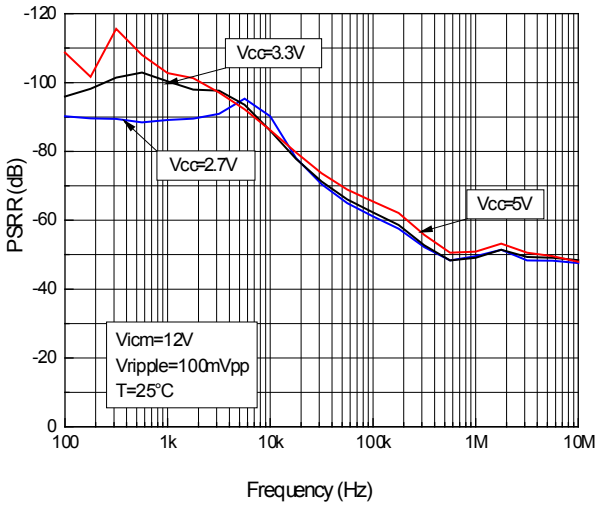

Figure 46. CMRR vs. frequency

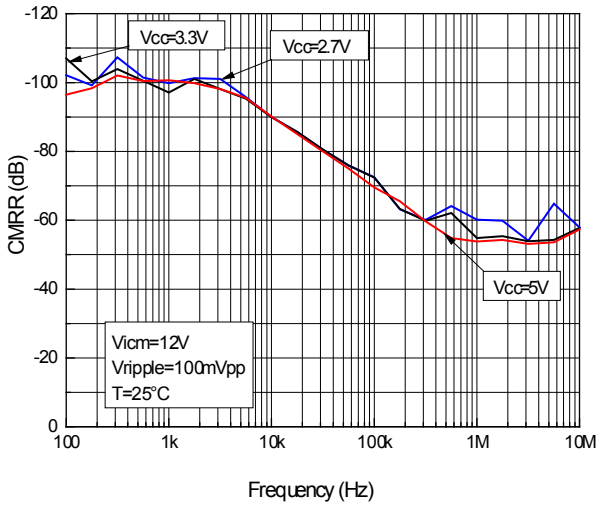

Figure 47. Positive overvoltage recovery V_{CC} = 2.7 V

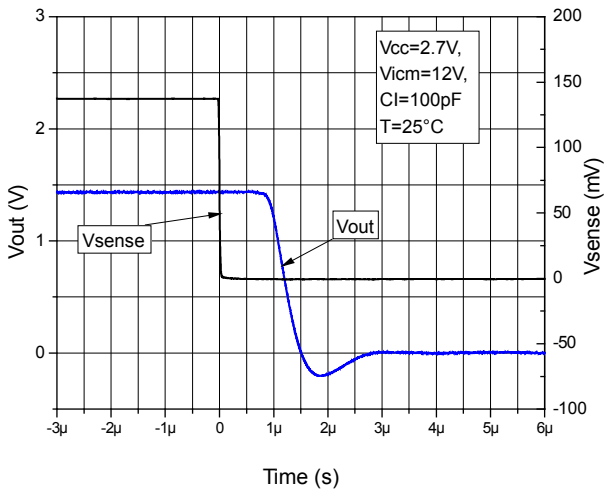

Figure 48. Negative overvoltage recovery V_{CC} = 2.7 V

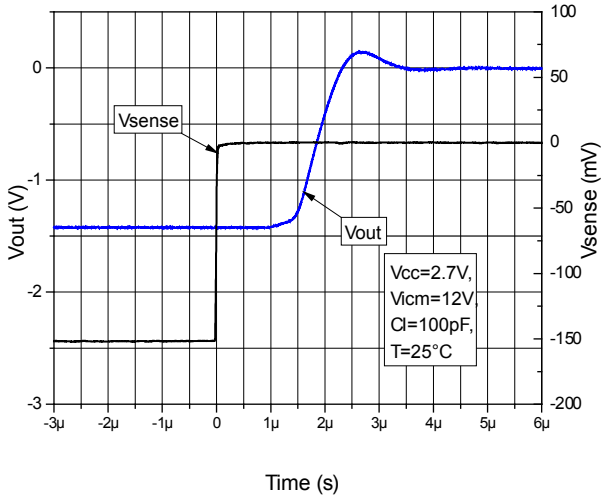

Figure 49. Overvoltage recovery vs. V_{icm} V_{CC} = 5 V

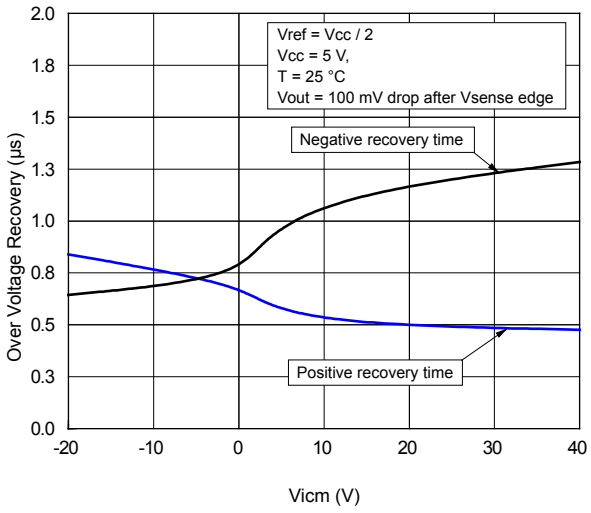

Figure 50. Noise vs. frequency

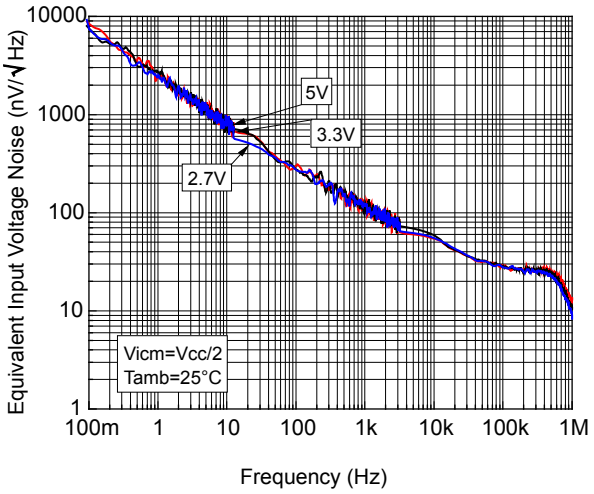

Figure 51. ON/OFF delay for shutdown mode

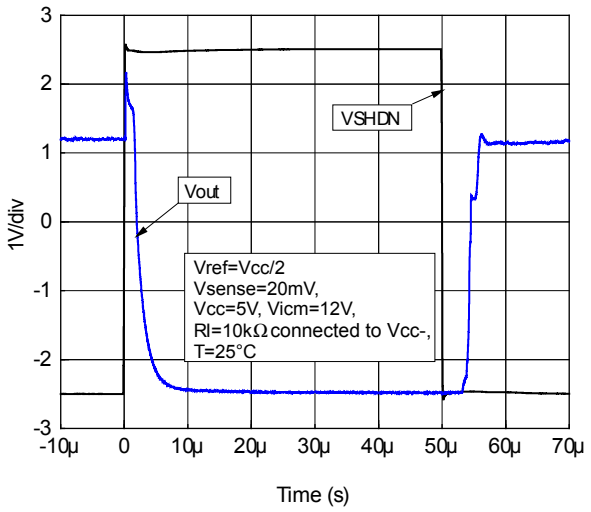

Figure 52. Output voltage vs. V_{sense} beyond the sense operating

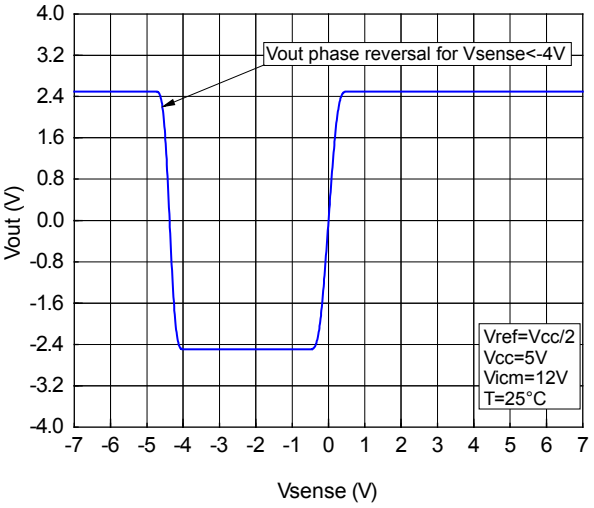

Figure 53. Power-up time delay

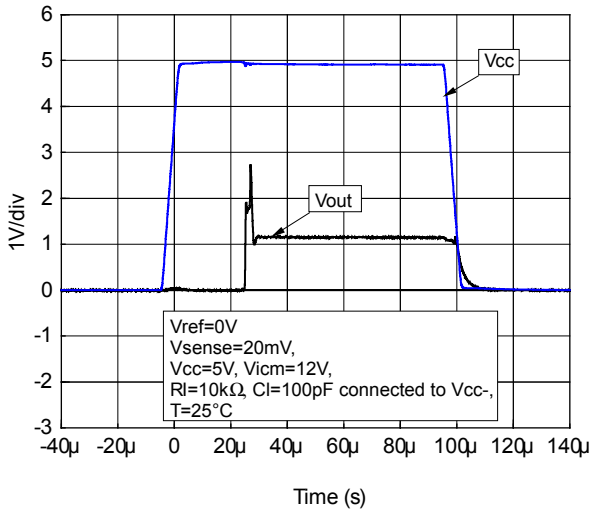

5 Application information

5.1 Overview

The TSC2011H is especially designed to accurately measure the current by amplifying the voltage across a shunt resistor connected to its input. This voltage drop V_{sense} is then amplified by an instrumentation amplifier providing a max. input offset voltage of 500 µV (25 °C) for an input common voltage of 12 V.

The TSC2011H is a fixed gain current sensing amplifier of 60 V/V. Thanks to a thin film resistor, the TSC2011H offers an extremely precise gain and a very high CMRR performance even in a high frequency range. Moreover, by fixing the output common mode voltage, the TSC2011H can be either used as a unidirectional or bidirectional current sensing amplifier.

The TSC2011H provides an extended input common range from -20 V below the negative supply voltage, and up to 70 V allowing either low-side or high-side current sensing, while the TSC2011H device can operate from 2.7 to 5.5 V.

The parameters are very stable in the full V_{cc} range and characterization curves show the TSC2011H characteristics at 2.7 V and 5.0 V. Moreover, the main specifications are guaranteed in an extended temperature range from -40 to 150 °C.

5.2 Theory of operation

The main feature of the TSC2011H is the ability to work with an input common mode voltage largely beyond the power supply V_{cc} range (2.7 V to 5.5 V). It is ideal, for example, in automotive applications where a reverse battery can be supported by the TSC2011H without any damage. It also works with 48 V battery applications as the TSC2011H can support and measure the current on line at voltage up to 70 V. No additional protective components are needed in that range.

- **$V_{cc} < V_{icm} < 70$ V**

In this case, the power supply of the TSC2011H is issued by the input and not only by the V_{cc} power supply. More precisely, a current is drawn by the common mode rail as depicted in Figure 1 to power it.

Figure 54. Power supply when $V_{icm} > V_{cc}$

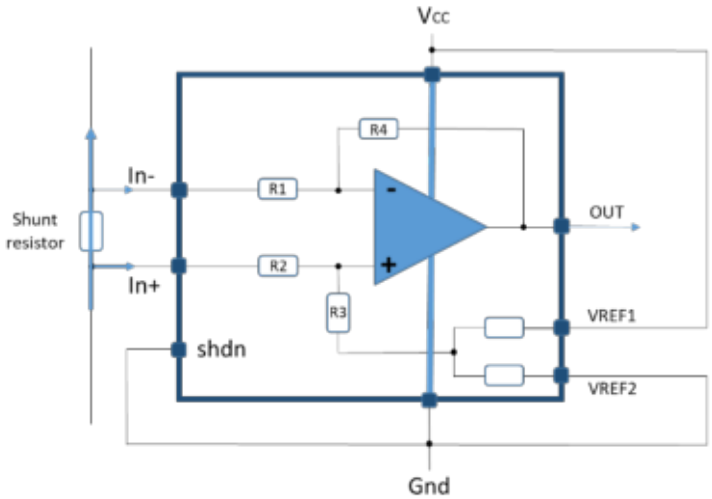

In Figure 2, the current used to power the TSC2011H increases together with the V_{icm} voltage. The slope represents the internal common mode resistances. The greater part of the current is drawn by the pin In+, as we can see on the i_{ibp} curve of Figure 7 the current is around 450 µA. Some of it being V_{icm} / (R_4+R_1) and some supplies the input stage of the circuit, roughly 250 µA. On the In- pin 250 µA is drawn only.

So due to the architecture of the TSC2011H, the current to be measured must be much larger than the input bias current. In case of small current to measure the Iib current must be taken into account.

Figure 55. **Input bias current vs. common mode voltage V_{cc} = 5 V**

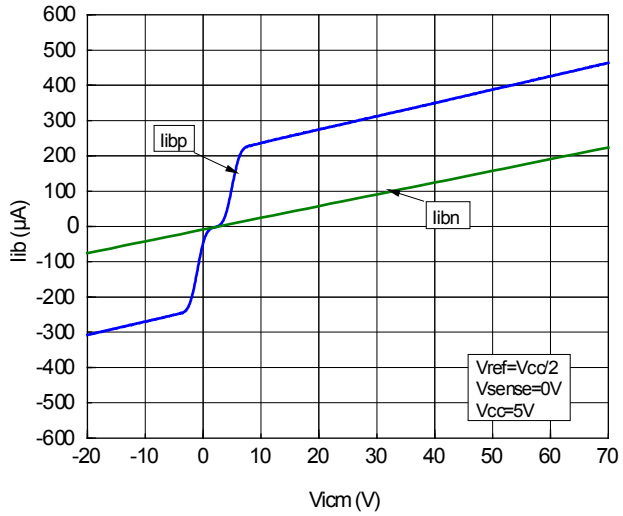

- **Gnd < V_{icm} < V_{cc}**

In this manner, the TSC2011H is only powered by the power supply V_{cc}, and the iib currents are very close to 0 µA and do not have any impact on the current measurement.

- **-20 V < V_{icm} < Gnd**

The TSC2011H is fully functional in this range of common mode voltage and has also been characterized.

As the high positive common mode voltage, in this specific range, the TSC2011H is also powered by the input, see Figure 3.

Figure 56. **Power supply when V_{icm} < Gnd**

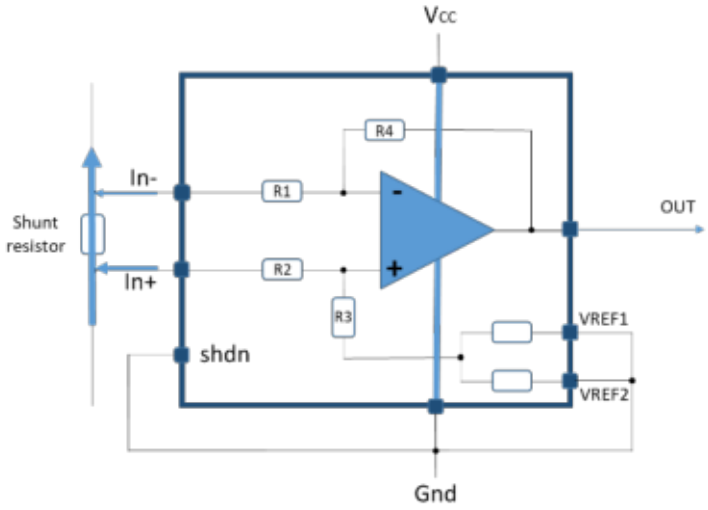

Most of the current is still due to the pin I_{n+} as we can see on the i_{ibp} curve of Figure 7. The current is about - 300 µA, some of it being V_{icm} / (R_4 + R_1) and some other supplies the circuit, roughly 250 µA. A small part of the current, coming from the common mode rail, is also due to the input I_{n-} in order to power the TSC2011H, in a range of -100 µV.

- **Output common mode range**

The TSC2011H output common mode voltage level can be set thanks to voltages applied on the VREF1 and VREF2 pins. These two pins allow the device to be set either in bidirectional or in unidirectional operation. The voltage applied to those pins must not exceed the V_{cc} range. The different configurations are detailed in the section Unidirectional/Bidirectional operation.

As depicted by Figure 4, VREF1 and VREF2 pins can be driven by an external voltage source capable of sourcing/sinking a current following the equation below:

$$Iref = \frac{Vicm - Vref}{5k\Omega + 275k\Omega + 25k\Omega} \quad (1)$$

Figure 57. V_{ref} powered by an external voltage source

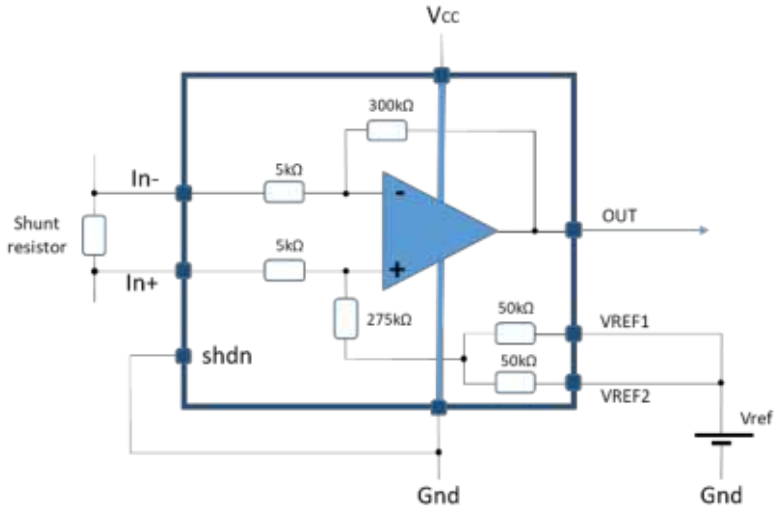

When the output common mode voltage is supplied by an external power supply, in order to improve the output voltage measurement, it is recommended to measure the V_{out} differentially with respect to V_{ref} voltage. It provides a better CMRR measurement, better noise immunity and also a more accurate V_{out} voltage. A decoupling capacitance of 1 nF minimum can be also added to better filter the power supply, and can also be used as a tank capacitance in case an ADC is connected to this reference voltage.

5.3 Unidirectional / bidirectional operation

- **Unidirectional operation**

Unidirectional mode of operation allows the device to measure the current through a shunt resistor in one direction only. The output reference can be ground or V_{cc} and can be set by using VREF1 and VREF2 pins for adjustment.

- **Ground referenced**

Figure 58. Output reference to ground

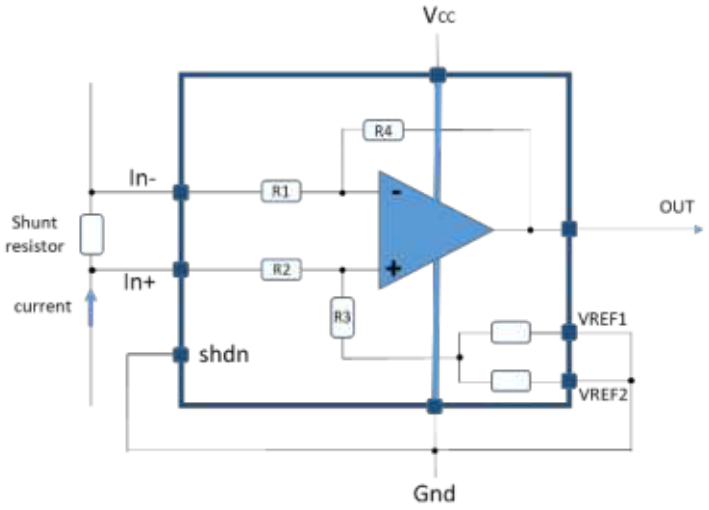

In this configuration VREF1 pin and VREF2 pin are connected together to the ground. The output common mode voltage is then automatically set to GND when no current flows through the R_{shunt} resistance. This configuration allows the full scale output in unidirectional mode. It allows a current to be measured as described in Figure 1.

- **V_{cc} referenced**

Figure 59. Output reference to V_{cc}

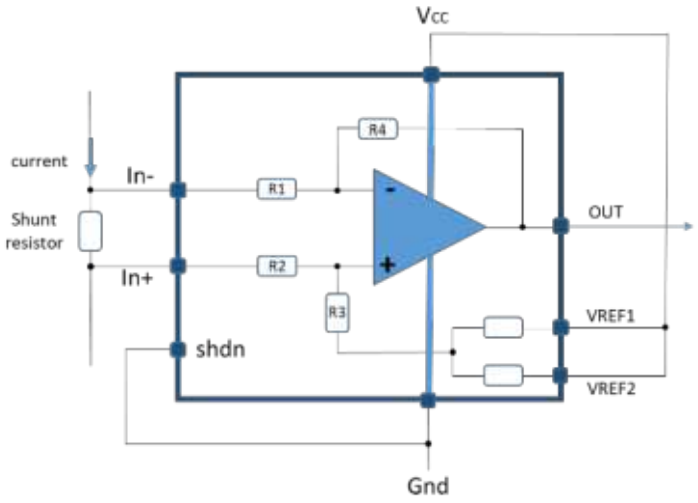

In this configuration VREF1 pin and VREF2 pin are connected together to the V_{cc} power supply. The output common mode voltage is then automatically set to V_{cc} voltage when no current flows through the R_{shunt} resistance. This configuration allows the full scale output in unidirectional mode. It measures the current as described in Figure 2.

- **Bidirectional operation**

Bidirectional mode of operation allows the device to measure currents through a shunt resistor in two directions. The output reference can be set anywhere within the power supply range. If the output common mode voltage is set at mid-range, the full scale current measurement range is equal in both directions. This is achieved by connecting one VREF pin to Vcc and the other VREF pin to Gnd as described by Figure 3. It can also be done by connecting both VREF pins to V_{cc} / 2 voltage as described by Figure 4. In case the current measurement is not equal in both directions, the user can set the output in a non-symmetrical configuration, adjusting Vref according to the user's needs.

- **Split supply**

Figure 60. Split supply

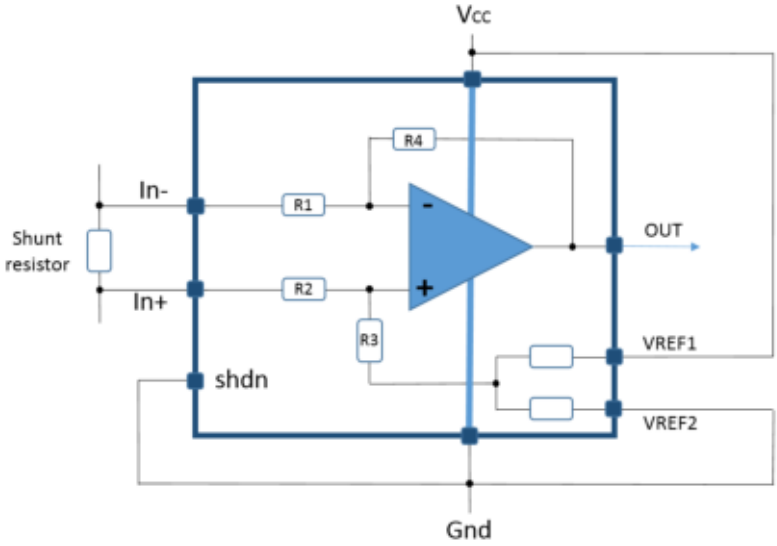

The biggest advantage of this configuration is that the TSC2011H can be used in bidirectional mode with an output common mode voltage set at the middle of scale, with an accuracy of 0.1%, without any added external component or power supply. This configuration creates a midscale offset ratiometric to the power supply.

- **External**

Figure 61. External supply

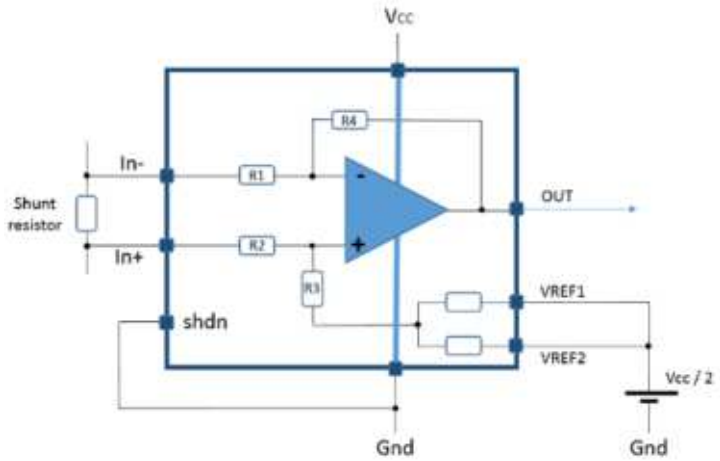

In this configuration, VREF1 pin and VREF2 pin are connected together to a reference voltage. The output common mode voltage is then automatically set to this reference voltage value when no current flows through the R_{shunt} resistance. This configuration adjusts the output offset as needed by the application. A DAC for calibration of the analog chain could also be used.

5.4 R_{SENSE} selection

The selection of the shunt resistor is a trade-off between the dynamic range and power dissipation.

Generally, in high current sensing applications, the main focus is to reduce as much as possible the power dissipation (I^2R) by choosing the smallest value of shunt. It could be quite easy if a full scale current to measure is small.

In low current applications the R_{sense} value could be higher, to minimize the impact of the offset voltage on the circuit. Due to input bias current of several µA, the TSC2011H cannot measure the current in the same range, when the common mode voltage overpasses the power supply voltage (refer to section about theory of operation).

The trade-off is mainly when a dynamic range of current to measure is large, meaning ability to measure with the same shunt value from low current to high current. Generally, the current full scale (Imax-Imin) defines the shunt value thanks to the full output voltage range, the gain of the TSC2011H. The TSC2011H can work with a full scale ΔV_{out} = 100 mV to V_{cc} - 100 mV with maximum gain accuracy of 0.3%.

At first order, the full current range to measure through R_{sense} can be defined by equation 2, just by taking the gain error and input offset voltage as inaccuracy parameters:

$$Isense_full_scale*Rsense = \frac{Vcc - 200mV}{TSC_Gain(1+Eg)} - 2\left|Vio\right| \quad (2)$$

The V_{sense} parameter is defined in the electrical characteristics following equation 2.

Its purpose is to highlight that the product R_{sense}*T_{SC_gain} is determined by the application, and that once one of these two parameters is selected, the maximum value of the second one can be calculated.

- If power dissipation in the shunt is the key point, R_{Sense} should be chosen as follows:

$$Rsense \leq \frac{Pmax}{Imax^2}$$

  and then choosing the right gain. For example, for high current to sense, the TSC2012H can offer a gain of 100, in this manner a smaller shunt can be used and so limited power losses. However accuracy can be lower.
- Or choosing the product available on the shelf, and then size the shunt resistor value accordingly.

5.5 Input offset voltage drift overtemperature

The maximum input offset voltage drift overtemperature is defined as the offset variation related to the offset value measured at 25 °C. The signal chain accuracy at 25 °C can be compensated during production at application level. The maximum input voltage drift overtemperature enables the system designer to anticipate the effect of temperature variations.

The maximum input voltage drift overtemperature is computed using equation 3:

$$\frac{\Delta V_{io}}{\Delta T} = \max\left|\frac{V_{io}(T) - V_{io}(25°C)}{T - 25°C}\right| \quad (3)$$

where T = -40 °C and 150 °C.

The TSC2011H datasheet maximum value is guaranteed by measurements on a representative sample size ensuring a C_{pk} (process capability index) greater than 1.3.

5.6 Error calculation

The principal source of error, such as: input offset voltage, gain error, common mode rejection ratio, are described separately in the electrical characteristics. This chapter summarizes the most important error to take into account during a design phase.

- **Input offset voltage error**

Equation 2 depicts a first order error calculation just by taking into account the input offset voltage. In a temperature environment, the deviation of the V_{io} and the error linked to the input offset on the output voltage can be written as equation 4:

$$Vio\ Error = (\pm Vio \pm Dvio/Dt)*Gain \quad (4)$$

- **Gain error and shunt resistance accuracy**

$$Gain\ error = Gain(1 + \varepsilon gain) \quad (5)$$

$$Rsense\ error = Gain(1 + \varepsilon Rsense) \quad (6)$$

Where $\varepsilon gain$ is the gain error 0.3% max. for the TSC2011H.

Where $\varepsilon Rsense$ is the shunt resistance error. Shunt resistors from 5 mΩ to 100 mΩ are available with 1% accuracy or better.

- **CMR error**

In the electrical characteristics, CMR is specified at one input common mode voltage. So in order to take into consideration the variation of the input voltage offset depending on the V_{icm}, the calculus must be done till this known point. Let us get V_{icm} = 12 V as a reference point.

So the error on V_{out} due to a common mode voltage variation can be written as in equation 7:

$$CMR\ error = \pm \frac{Vicm - 12V}{CMR} * Gain \quad (7)$$

- **Output common mode error (Vocm)**

This error can be taken into account when the output common mode voltage is set as suggested in Figure 62. Schematic for V_{ocm} error, and so by using the internal divider bridge. Otherwise it is important to take into consideration the error linked to the voltage source applied on the VREF1 pin and VREF2 pin.

Figure 62. Schematic for V_{ocm} error

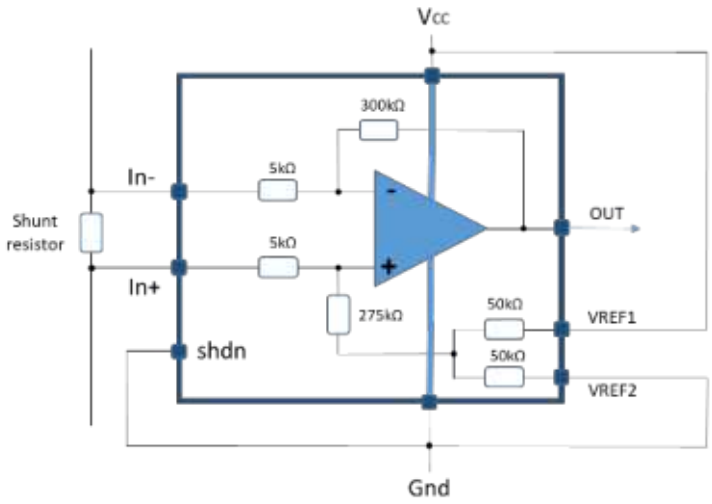

The divider bridge is made by two resistances of 50 kΩ given an output common mode voltage of:

$$\frac{Vref1 + Vref2}{2}$$

Due to a small mismatch of the internal resistance the error, on the output common mode voltage, can be described as in equation 8:

$$Vocm = \left(\frac{Vref1 + Vref2}{2}\right).(1 + \varepsilon Acc) \quad (8)$$

Where εAcc is the accuracy referred to the output with a typical value of 0.1%.

- **Noise**

The Figure 50. Noise vs. frequency expresses the noise referred to the input of the TSC2011H. This device shows a 1/f noise until 10 kHz frequency. Above this limit the white noise density is 29 nV/$\sqrt{Hz}$, until the bandwidth of the TSC2011H.

The noise can be then expressed as two terms, the former related to the 1/f noise and the latter due to the white noise. If we consider that there is no additional filter on the TSC2011H and it is only bandwidth limited, it can be considered that over the 750 kHz, there is an attenuation of the noise with a first order filtering. So the equivalent noise bandwidth is $750kHz.\frac{\pi}{2}$.

The RMS value of the output noise is the integration of the spectral noise over the bandwidth of interest and can be expressed as equation 9:

$$enRMS = \left(\sqrt{\int_{0.1}^{10000}\left(\frac{29.10^{-9}}{\sqrt{\frac{f}{10.10^{3}}}}\right)^{2} df + \int_{0.1}^{750000.\frac{\pi}{2}}\left(29.10^{-9}\right)^{2} df}\right) * Gain \quad (9)$$

- **Total error**

The maximum total error expected on the output of the device can be described as the sum of the different source described just above. The total output accuracy can be written as equation 10.

$$Vout_{err} = Gain*Rsense*|Iload|(\varepsilon gain + \varepsilon Rsense) + Gain.|Vio| + Gain.\frac{|Vicm - 12V|}{CMR} + |Vocm|(\varepsilon Acc) + noise \quad (10)$$

I_{load} is described in Figure 63. Input current and the output noise is described by equation 9.

Note that the input bias currents are not taken into account in this section, as they are already integrated in the V_{sense}. Figure 63. Input current below depicts the current flowing from the source to the load when the input common mode voltage is higher than the supply voltage.

Figure 63. Input current

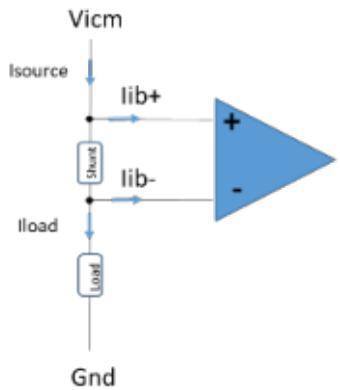

From a calculation approach, when V_{icm} voltage is beyond V_{cc}, I_{load} must be considered as the sum of I_{source} and Input bias current (I_{ib}). Note that the input bias current on the pin IN– is largely lower and can be neglected.

Figure 63. Input current also expresses that the TSC2011H cannot measure the current in the same order as input bias current (several hundreds of µA).

The linearity is not taken into account in the error calculus as it represents 0.03% of error only and it is negligible. Nevertheless, as the gain error has been calculated thanks to the best fit line approach, it gives the information that the gain error can be relatively constant throughout the linear input range of the TSC2011H.

Equation 10 has been described for a temperature of 25 °C. For sure with a temperature variation, D_{vio}/DT error term must be added. And if the power supply is susceptible to change, the SVR parameter must also be taken into account.

- **Example**

Let us consider that the maximum total error can happen on the output of the TSC2011H.

- **Use case:**
  - V_{cc} = 5 V
  - V_{icm} = 24 V
  - V_{ocm} = 2.5 V
  - Temperature = 25 °C
  - I_{load} = 5 A
  - Shunt 5 mΩ with 1% accuracy

Theoretically the expected output voltage should be $V_{out} = R_{shunt} * I_{load} *60 + V_{ocm}$ = 4 V.

From the equations above, all the error terms are detailed by using the maximum value of the electrical characteristics (when available), in order to express as much as possible, the worst case condition. The % error on output of the following table is expressed in reference to $V_{out} – V_{ref}$, so in this typical example: 1.5 V.

Table 6. Gain error

Error source	Calculus	Output voltage error	% error on output
Gain error	$60*5.10^{-3}*5*0.3\%$	4.5 mV	0.3%
V_{io} error	$60*500\mu V$	30 mV	2%
CMRR error	$60*\frac{24V-12V}{\frac{90}{10\overline{20}}}$	22.7 mV	1.5%
V_{ocm} error	$2.5*0.1\%$	2.5 mV	0.2%
Noise	$60*\frac{29nV}{\sqrt{Hz}}\sqrt{10kHz*\left(\ln(10k)-\ln(0.1)\right)+750kHz*\frac{\pi}{2}-0.1Hz}$	1.98 mV_{RMS}	0.4% (1)
Total		60 mV +1.98 mV_{RMS}	4.4%

1. *The percentage is based on voltage peak value, which is 3 times RMS value.*

So the maximum output voltage in the worst case condition at ambient temperature is 4.060 V + 1.98 mV_{RMS} instead of 4 V expected. This represents an error on the current reading of about 4.4%. 1% more must be added due to the shunt accuracy.

This calculus comes from all the maximum values and all the error terms which have been added to each other, meaning that the chance of getting 4.4% precision in the use case above is extremely low and on the whole population, the error is largely smaller.

5.7 Shutdown mode

If the SHDN pin is driven between 0.7 x V_{cc} and V_{cc} the TSC2011H enters low power shutdown mode, drawing less than 20 µA, over the V_{cc} and V_{icm} range. In SHDN mode the output is in HiZ state.

Although there is an internal current source of 500 nA on the SHDN pin, keeping a low state allowing the TSC2011H to work without any voltage applied on the SHDN pin, it is strongly recommended to apply the dedicated voltage on the SHDN pin to ensure the full functionality of the TSC2011H, especially when fast common mode variation appears.

The figure below depicts the architecture of the SHDN pin.

Figure 64. SHDN pin

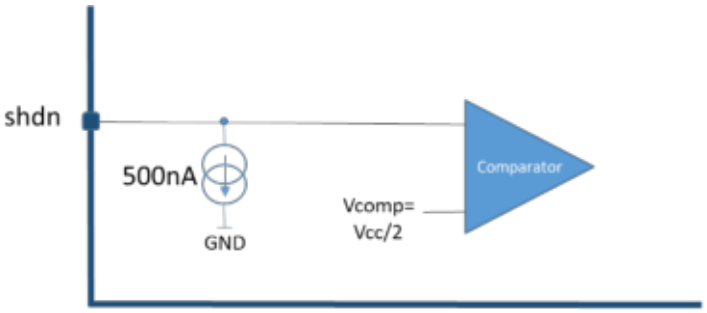

- With GND applied to SHDN pin the TSC2011H is in active mode
- With V_{cc} applied to SHDN pin the TSC2011H is in shutdown mode

5.8 Stability

- **Driving switched capacitive loads**

Some ADCs get their signal thanks to a sample and hold capacitor. If before a sampling this capacitance is fully discharged, a fast current load can appear on the output of the TSC2011H during the sampling phase.

The scope probe in the figure below shows the output voltage of the TSC2011H excited by a 40 pF capacitor with a 3.3 Vpp signal at 50 kHz to simulate the sample and hold circuit of the ADC120.

Figure 65. Capacitive load response at V_{cc} = 3.3 V

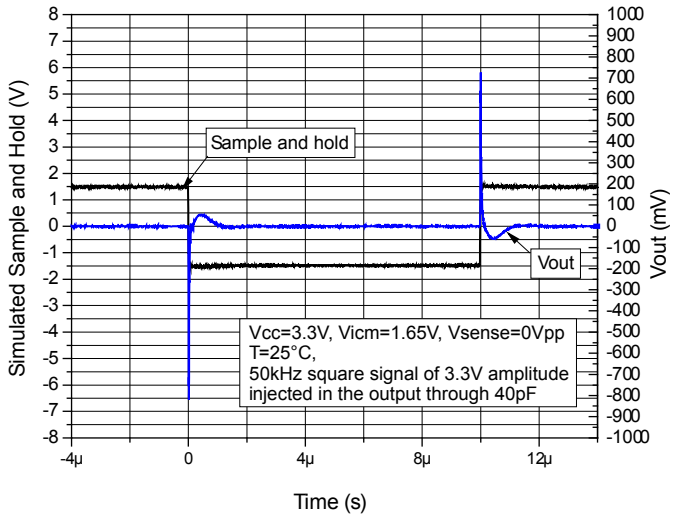

The ADC120 has a conversion rate of 50 ksps, which is perfect to sample and hold the output of the TSC2011H without any error.

The following graph shows the behavior of the output of the TSC2011H under the worst case condition, as for example, when there is an ADC120 channel change between two measurements.

If a single channel is used, the change on the sample and hold capacitance is very small for sure, and so the recovery time is extremely low as described by the figure below.

Figure 66. Capacitive load response at V_{cc} = 3.3 V with a step of 100 mV

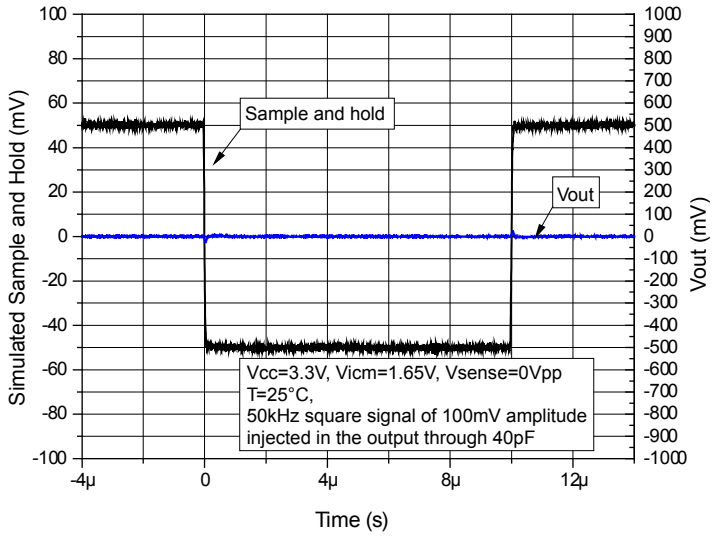

The effect of the ADC sampling and hold can be easily smoothed thanks to an RC filter. As suggested on the schematic below. The capacitor of the external filter must be chosen much higher than the internal ADC capacitor, in order to easily absorb the sudden voltage variation on the output due to the sampling and hold of the ADC. The resistance must be chosen according to the application speed of the system in order not to impact the whole application. The main advantage of using an RC filter is to have an antialiasing system. The used ADC should certainly have sample and hold conversion in accordance with the RC filter value, in order to let the output recover before sampling.

Figure 67. RC filter when driving ADC

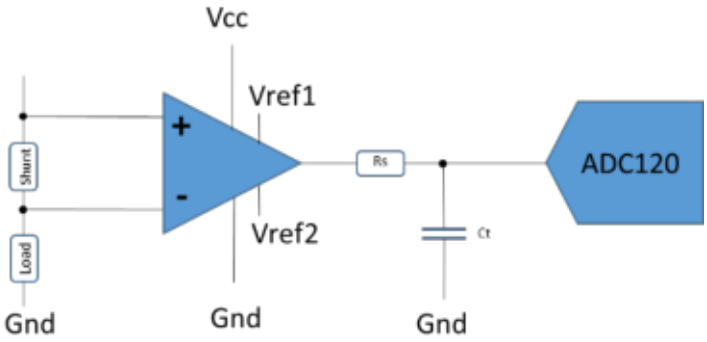

In Figure 4 an R_s = 470 Ω resistance and a C_t = 470 pF capacitance have been set. Given a low-pass filter of 720 kHz and a response time of roughly 660 ns.

In Figure 5 an R_s = 820 Ω resistance and a C_t = 1 nF capacitance have been set. Given a low-pass filter of 194 kHz and a response time of roughly 2.5 µs.

Figure 68. Capacitive load response at V_{CC} = 3.3 V with 720 kHz RC filter

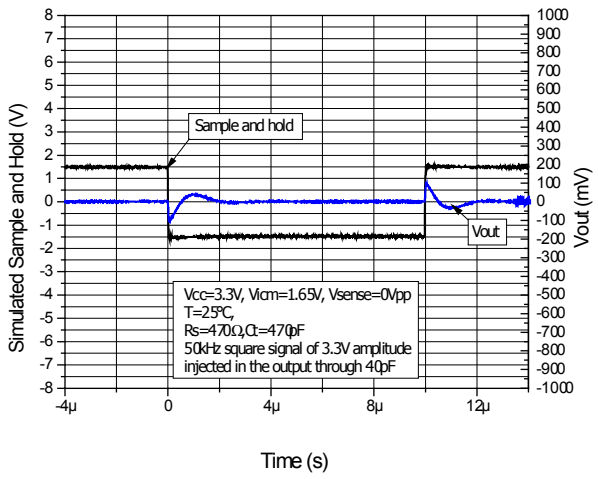

Figure 69. Capacitive load response at V_{CC} = 3.3 V with 194 kHz RC filter

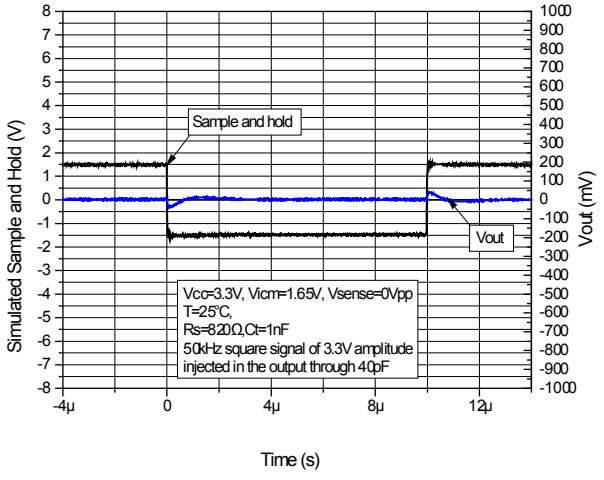

The value of the added external capacitor must be taken into account. Indeed, if this one is chosen with an excessive value and the serial resistance with a too small value, the risk of instability on the output of the TSC2011H is high.

- **Driving large capacitive C_{load}**

Increasing the load capacitance produces gain peaking in the frequency response, with an overshoot and ringing in the step response.

The figure below shows the serial resistors that must be added to the output, to make a system stable. The chosen criteria ensures the stability of the system and it is an overshoot lower than 24%.

Figure 70. Stability criteria with a serial resistor at V_{CC} = 5 V

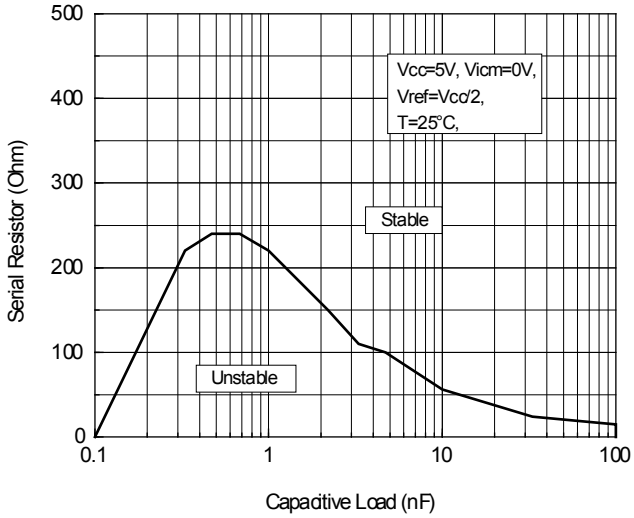

5.9 Power supply recommendation

In order to decouple correctly the TSC2011H, a 100 nF bypass capacitor can be placed between V_{CC} and Gnd. This capacitor must be placed as close as possible to the supply pins. The figure below shows a start-up time with a decoupling capacitance of 100 nF.

Figure 71. Start-up time with a decoupling capacitance of 100 nF

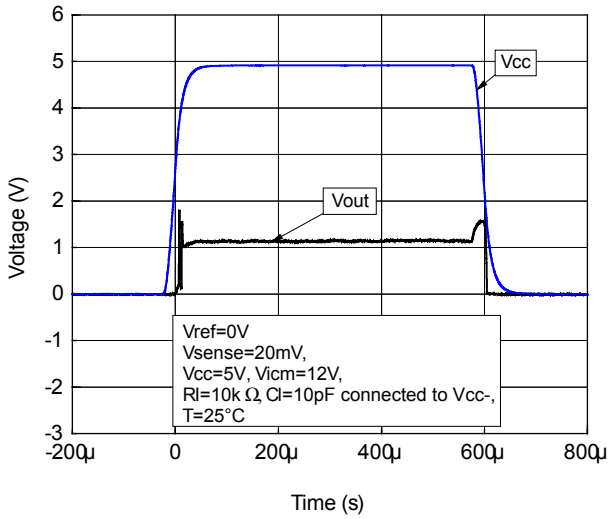

The VREF pin is used to fix the output common mode voltage and it is driven by a low impedance voltage source and can be decoupled thanks to a 10 nF bypass capacitor.

A greater bypass capacitor added on the V_{CC} pin and VREF pin helps to enhance CMRR and PSRR performance.

5.10 PCB layout recommendations

The layout of the PCB tracks connected to the current sensing, load and power supply is very important. It is good practice to use short and wide PCB traces to minimize voltage drops and parasitic inductance.

When a shunt resistance, lower than 1 Ω, is used, a 4-wire connection technique should be used to sense the current as described in the schematic below. This technique separates pairs of current carrying and voltage-sensing electrodes to make more accurate measurements by eliminating the lead and contact resistance from the measurement.

The track connected to the input pin of the TSC2011H has to be considered as a differential pair, it must have the same length and width, and ideally placed on the same PCB plane, and above all must be routed as far as possible from any noisy source. As this track carries the input bias current, in a range of hundreds of µA, it can be designed small but always by taking care of its resistivity. Any via in these input tracks are not recommended to avoid any parasitic resistance in this path.

To minimize parasitic impedance over the entire surface, a multi-via technique that connects the bottom and top layer ground planes together in many locations is often used.

A ground plane generally helps to reduce EMI; that is why a multilayer PCB use is suggested as well as the ground planes as a shield to protect the internal track. In this case, the digital from the analog ground must be separated and any ground loop must be avoided. Loop area or antenna must be reduced to minimize EMI impact.

Figure 1 suggests a possible routing for the TSC2011H, in order to minimize parasitic effect.

Figure 72. **Recommended layout**

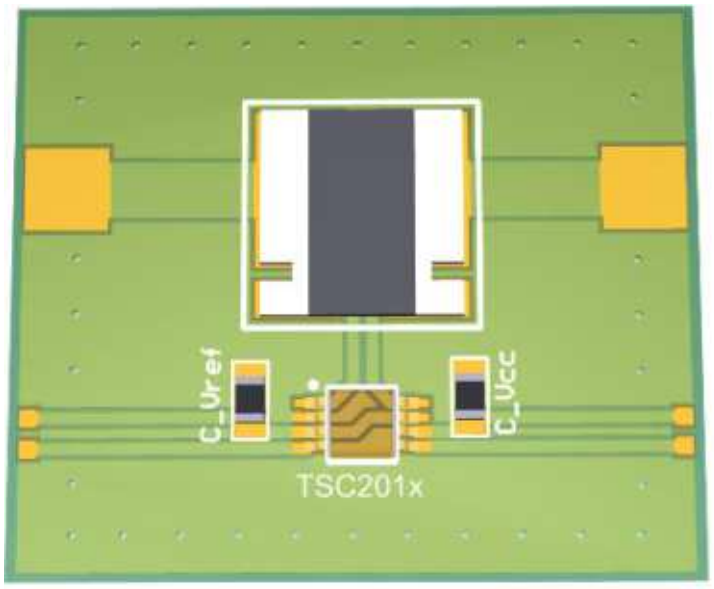

5.11 EMI rejection ratio (EMIRR)

The electromagnetic interference (EMI) rejection ratio, or EMIRR, describes the EMI immunity of current sensing device. An adverse effect that is common to many current sensing is a change in the offset voltage as a result of RF signal rectification. Figure 1 shows the EMIRR on pin IN+, Figure 2 shows the EMIRR on pin IN- of the TSC2011H measured from 400 MHz up to 2.4 GHz.

Figure 73. EMIRR on pin+

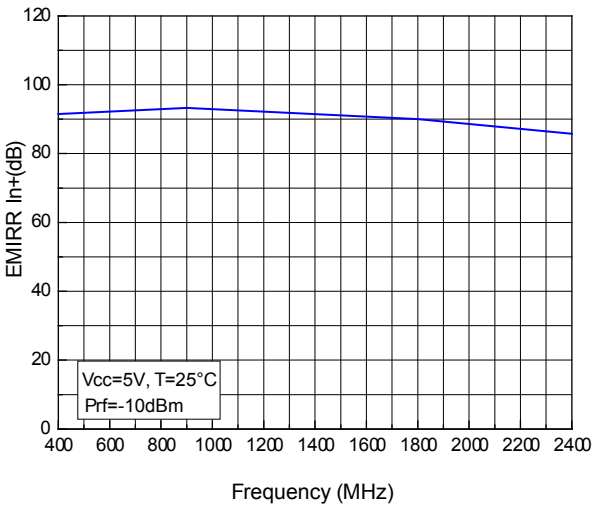

Figure 74. EMIRR on pin-

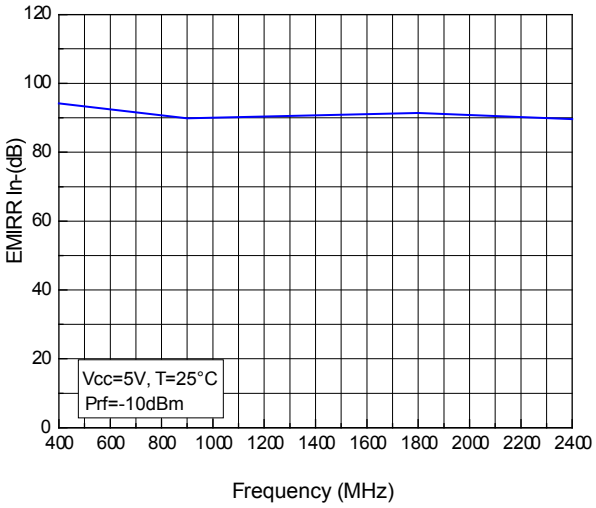

Figure 75. EMIRR on pin+ (TSC2010H) shows the EMIRR on pin IN+, Figure 76. EMIRR on pin- (TSC2010H) shows the EMIRR on pin IN- of the TSC2010H measured from 10 MHz up to 2.4 GHz.

Figure 75. EMIRR on pin+ (TSC2010H)

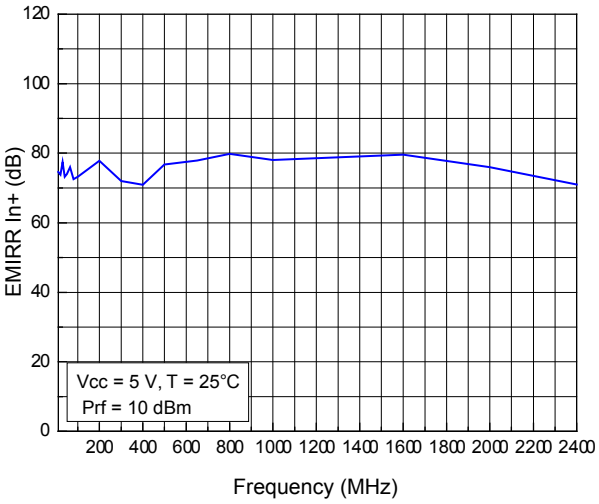

Figure 76. EMIRR on pin- (TSC2010H)

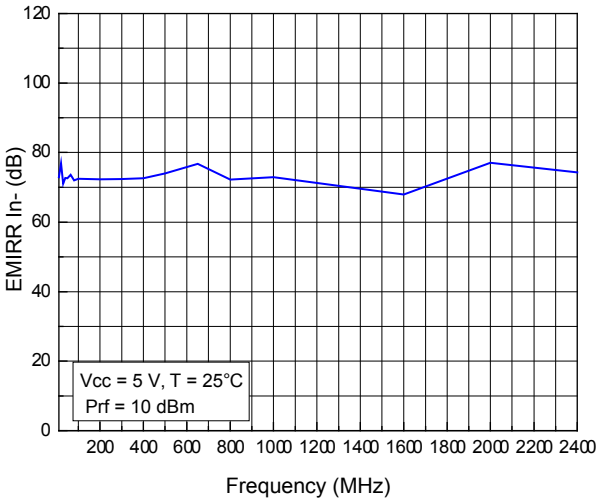

5.12 Overload recovery

Overload recovery is defined as the time required for the current sensing output to recover from a saturated state to a linear state.

The saturation state occurs when the output voltage gets very close to rails in the application. It results from an excessive input voltage.

When the output of the TSC2011H enters saturation state, less than 1 µs is needed to get back to a linear state as shown by Figure 77 and Figure 78.

Figure 45 and Figure 46 show the overvoltage recovery for a V_{CC} = 2.7 V.

Figure 77. Negative overvoltage recovery V_{CC} = ± 2.5 V

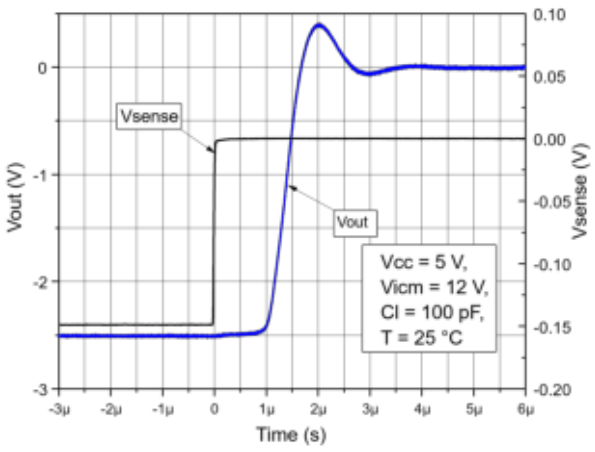

Figure 78. Positive overvoltage recovery V_{CC} = ± 2.5 V

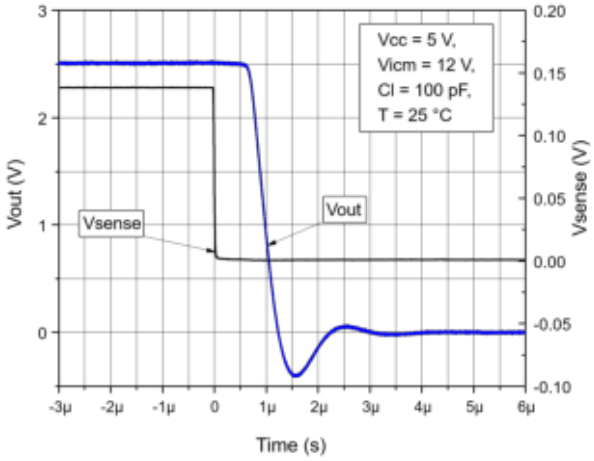

5.13 Application examples

5.13.1 H-bridge motor control

The H-bridge topology is very popular in motor control, DC-DC converters, LED lighting control and other bidirectional loads from a single supply potential.

The TSC2011H provides a feedback control system for current but also detects overload conditions.

Figure 1 describes a typical schematic using the TSC2011H in a motor control application. A 20 mΩ shunt resistance in series with the motor monitors a measurable voltage drop representing the load current, and the TSC2011H amplifies the V_{sense} in order to give some information about the current flowing into the motor in real time. This information is then digitalizing by the 12-bit ADC (ADC120).

Figure 79. H-bridge application

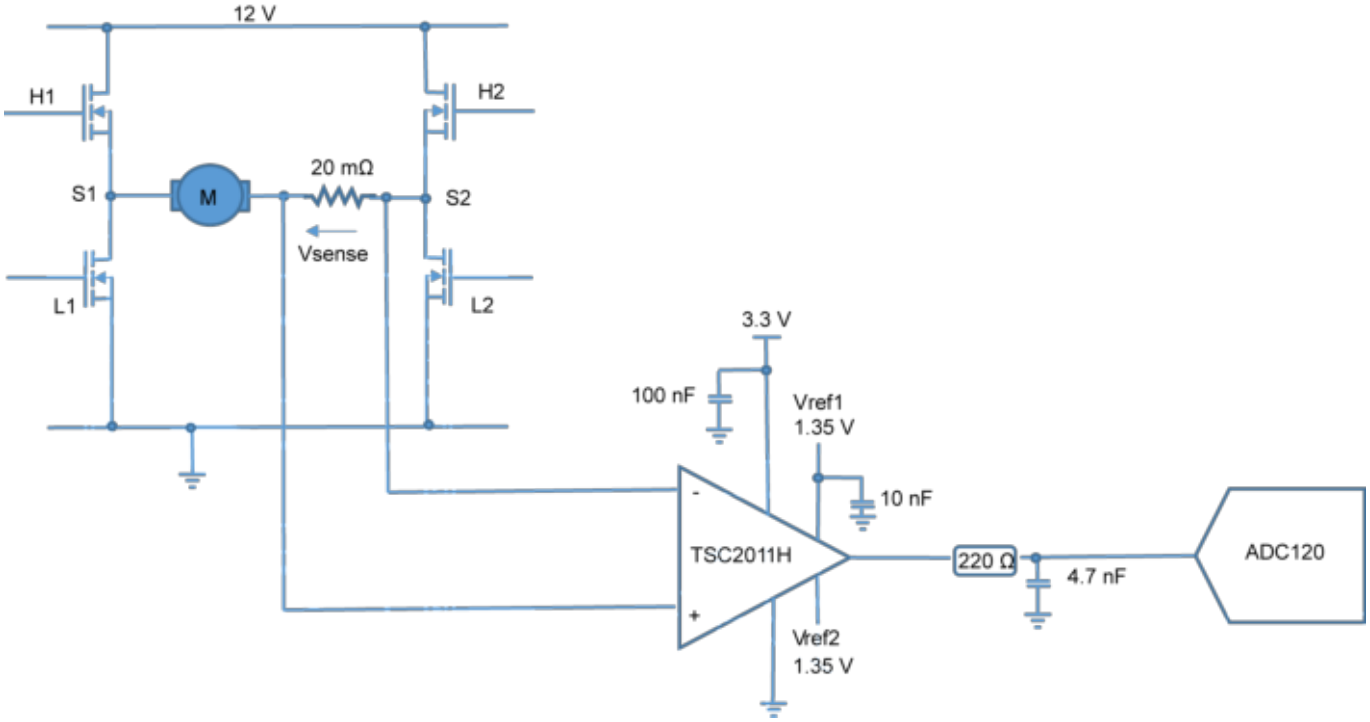

General overview:

To make the motor rotation occur, the NMOS H1, H2, L1, L2 are driven by a H-bridge quad power MOSFET driver. We have to consider that the current flows from 12 V to the GND, through H1 NMOS and L2 NMOS. A PWM is applied on the NMOS L2 in order to control the current and thus the speed of the motor.

By PWM, the average voltage applied on the motor is controlled. H1 remains always ON and the PWM is applied on L2. When L2 is turned OFF, H2 must be turned ON, for freewheeling, allowing the discharge of the motor inductance current. This phenomenon generates a fast input common mode voltage transition on the TSC2011H, from 0 V to 12 V.

Thanks to a good recovery time due to fast input common mode change, the TSC2011H follows the current flowing into the motor as depicted by the scope probe in Figure 80. TSC2011H H-bridge application.

The black curve represents the fast V_{icm} variation step of 12 V in 500 ns when the freewheeling is activated. The blue curve represents the current flowing into the motor measured with a current probe.

The red curve represents the output voltage - 1.35 V (Vref voltage) of the TSC2011H probe after the RC filter.

The RC filter, used to drive the ADC120, smoothens the output signal a little and adds a small constant time, in the range of 1 µs.

Figure 80. **TSC2011H H-bridge application**

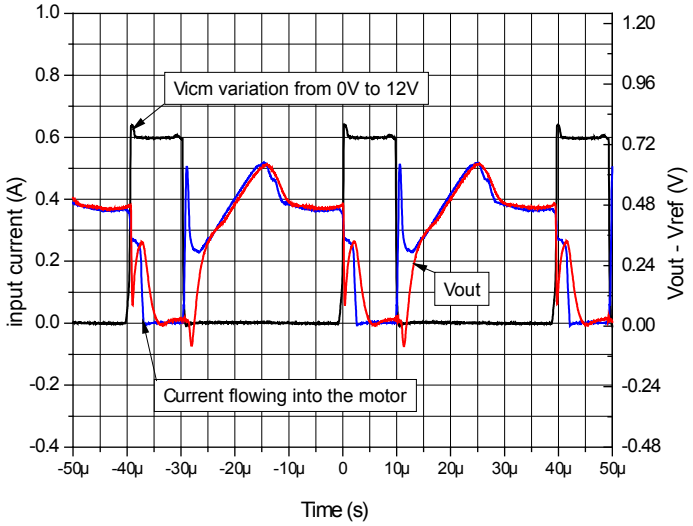

After a fast variation of the input common mode, the TSC2011H needs less than 5 µs to recover its normal behavior.

5.13.2 Solenoid valve

In automotive applications, the automatic transmission relies on bands and clutches to change gears, and the only way they can be applied is by fluid pressure. The transmission solenoid is responsible for opening or closing valves in the valve body to allow transmission fluid to enter, at which point the fluid can pressurize the clutches and bands. Solenoids consist of a spring loaded plunger wrapped with a coil of wire, and it is generally driven thanks to a MOS transistor.

In the schematic below the TSC2011H is used in mono-directional mode. When the MOS is ON, the current can flow through the solenoid and actuate this one. The input common mode is high in this case.

When the MOS is turned OFF, as the current stored in the solenoid cannot stop instantaneously, the diode turns ON allowing a freewheeling to discharge the solenoid resulting in a common mode one diode voltage drop below ground.

Thanks to its large input common mode range, the TSC2011H can be used for such applications depicted in the figure below.

In order not to saturate the output when no current is flowing into R_{sense}, a small voltage on V_{ref} has to be applied.

Figure 81. **Solenoid valve application**

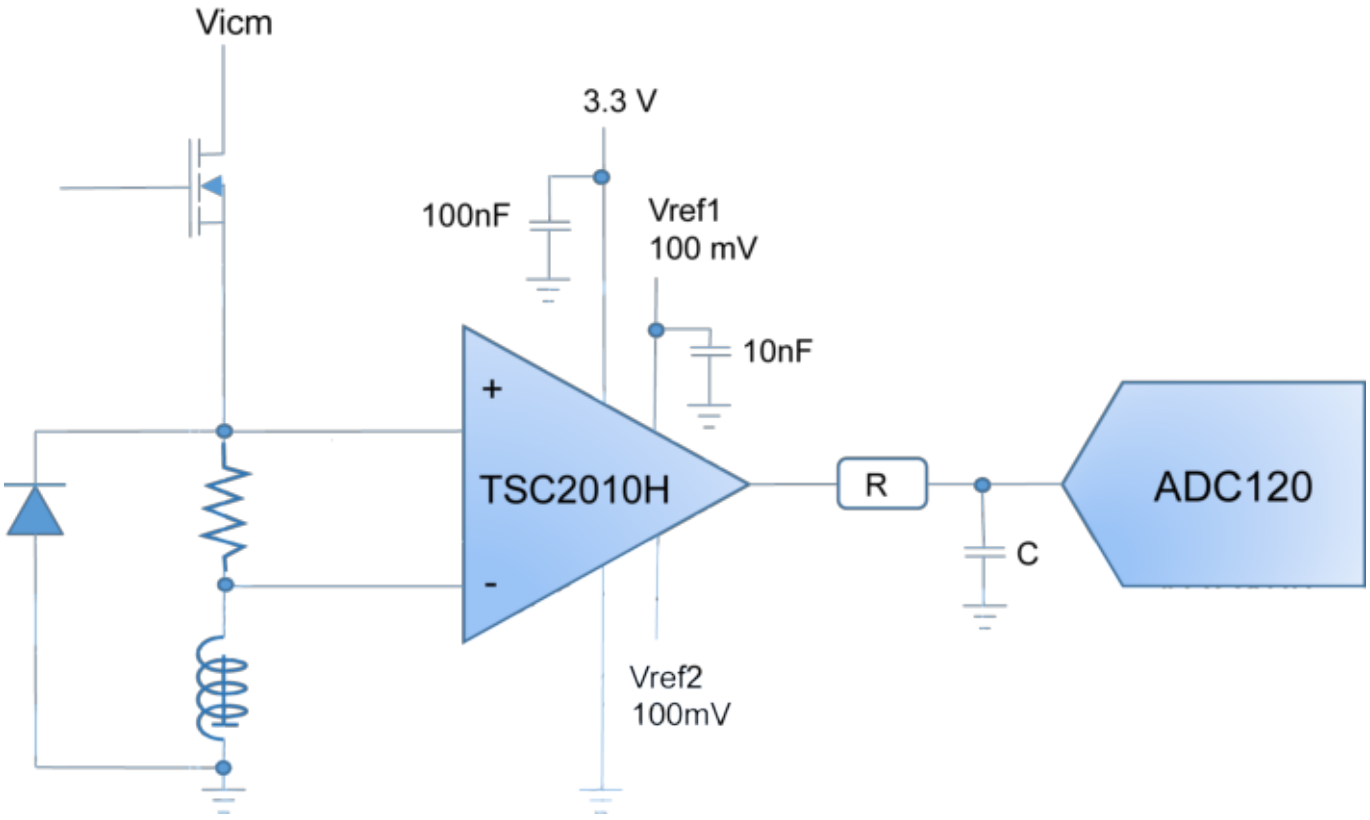

6 Package information

To meet environmental requirements, ST offers these devices in different grades of ECOPACK packages, depending on their level of environmental compliance. ECOPACK specifications, grade definitions, and product status are available at: www.st.com. ECOPACK is an ST trademark.

6.1 SO8 package information

Figure 82. SO8 package outline

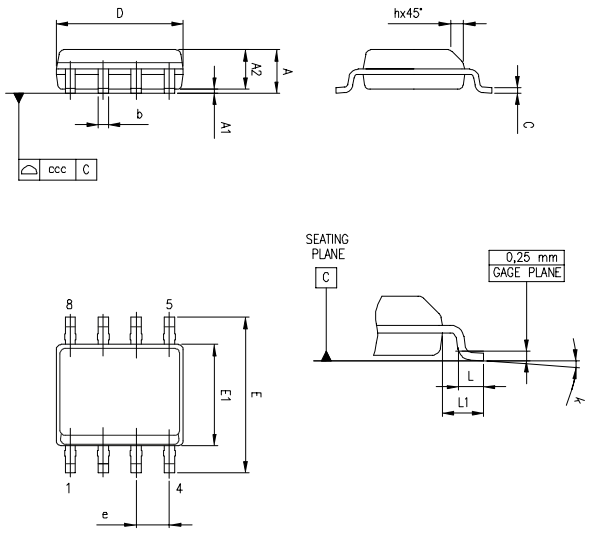

Table 7. SO-8 mechanical data

Dim.	mm			Inches		
	Min.	Typ.	Max.	Min.	Typ.	Max.
A			1.75			0.069
A1	0.1		0.25	0.004		0.01
A2	1.25			0.049		
b	0.28		0.48	0.011		0.019
c	0.17		0.23	0.007		0.01
D	4.8	4.9	5	0.189	0.193	0.197
E	5.8	6	6.2	0.228	0.236	0.244
E1	3.8	3.9	4	0.15	0.154	0.157
e		1.27			0.05	
h	0.25		0.5	0.01		0.02
L	0.4		1.27	0.016		0.05
L1		1.04			0.04	
k	0		8 °	1 °		8 °
ccc			0.1			0.004

7 Ordering information

Table 8. Order codes

Order code	Gain (V/V)	Package	Packing	Marking
TSC2010HYDT (1)	20	SO8	Tape and reel	2010HY
TSC2011HYDT (1)	60			2011HY
TSC2012HYDT (1)	100			2012HY

1. *Qualified and characterized according to AEC Q100 and Q003 or equivalent, advanced screening according to AEC Q001 & Q002 or equivalent.*

Revision history

Table 9. **Document revision history**

Date	Revision	Changes
02-Sep-2021	1	Initial release.
07-Feb-2025	2	Updated Figure 1. Minor text changes in Section 5.11.

Contents

1 **Diagram** 2
2 **Pin configuration** 3
3 **Maximum ratings** 4
4 **Electrical characteristics** 5
4.1 Typical characteristics 10
5 **Application information** 23
5.1 Overview 23
5.2 Theory of operation 23
5.3 Unidirectional / bidirectional operation 26
5.4 R_{SENSE} selection 28
5.5 Input offset voltage drift overtemperature 28
5.6 Error calculation 29
5.7 Shutdown mode 32
5.8 Stability 32
5.9 Power supply recommendation 35
5.10 PCB layout recommendations 35
5.11 EMI rejection ratio (EMIRR) 37
5.12 Overload recovery 38
5.13 Application examples 39
5.13.1 H-bridge motor control 39
5.13.2 Solenoid valve 40
6 **Package information** 42
6.1 SO8 package information 42
7 **Ordering information** 43
Revision history 44

List of tables

Table 1. Pin description . . . 3
Table 2. Absolute maximum ratings . . . 4
Table 3. Operating conditions . . . 4
Table 4. Electrical characteristics V_{cc} = 2.7 V, V_{icm} = 12 V, T = 25 °C (unless otherwise specified) . . . 5
Table 5. Electrical characteristics (V_{cc} = 5 V, V_{icm} = 12 V, T = 25 °C unless otherwise specified) . . . 8
Table 6. Gain error . . . 31
Table 7. SO-8 mechanical data . . . 42
Table 8. Order codes . . . 43
Table 9. Document revision history . . . 44

List of figures

Figure 1. Block diagram . . . 2
Figure 2. Pin connection (top view) . . . 3
Figure 3. Supply current vs. supply voltage . . . 10
Figure 4. Supply current vs. input common mode . . . 10
Figure 5. Supply current vs. temperature . . . 10
Figure 6. Supply current vs. input common mode with active shutdown mode . . . 10
Figure 7. Input bias current vs. input common mode with shutdown active . . . 11
Figure 8. Input bias current vs. temperature V_{CC} = 2.7 V . . . 11
Figure 9. Input bias current vs. temperature with V_{CC} = 5 V . . . 11
Figure 10. Input offset voltage vs. temperature . . . 11
Figure 11. Input offset voltage vs. input common mode with V_{CC} = 2.7 V . . . 12
Figure 12. Input offset voltage vs. input common mode with V_{CC} = 5 V . . . 12
Figure 13. Input offset voltage vs. supply voltage . . . 12
Figure 14. Output current vs. output voltage . . . 12
Figure 15. Output current vs. temperature with V_{CC} = 5 V . . . 13
Figure 16. Output current vs. temperature with V_{CC} = 2.7 V . . . 13
Figure 17. V_{oh} and V_{ol} vs. input common mode voltage with V_{CC} = 5 V . . . 13
Figure 18. (Output voltage + V_{ref}) vs. V_{sense} unidirectional with V_{CC} = 5 V . . . 13
Figure 19. (Output voltage + V_{ref}) vs. V_{sense} bidirectional with V_{CC} = 5 V . . . 14
Figure 20. Output rail linearity vs. load with V_{CC} = 5 V . . . 14
Figure 21. Linearity vs. V_{sense} with V_{CC} = 5 V . . . 14
Figure 22. Linearity vs. V_{sense} and temperature . . . 14
Figure 23. Gain error vs. input common mode . . . 15
Figure 24. Gain error vs. input common mode and temperature . . . 15
Figure 25. Load regulation with V_{CC} = 5 V . . . 15
Figure 26. Gain vs. frequency . . . 15
Figure 27. Gain vs. frequency V_{CC} = 5 V . . . 15
Figure 28. Gain vs. frequency different capacitive load . . . 15
Figure 29. Gain vs. frequency different capacitive load (TSC2010H) . . . 16
Figure 30. Gain vs. frequency different capacitive load (TSC2012H) . . . 16
Figure 31. Bandwidth vs. input common mode . . . 16
Figure 32. Bandwidth vs. input common mode (TSC2010H) . . . 16
Figure 33. Bandwidth vs. input common mode (TSC2012H) . . . 17
Figure 34. Overshoot vs. capacitive load . . . 17
Figure 35. Small signal response with V_{CC} = 5 V . . . 17
Figure 36. Small signal response with V_{CC} = 5 V (TSC2010H) . . . 17
Figure 37. Small signal response with V_{CC} = 5 V (TSC2012H) . . . 18
Figure 38. Small signal response with V_{CC} = 2.7 V . . . 18
Figure 39. Large signal response with V_{CC} = 5 V . . . 18
Figure 40. Large signal response with V_{CC} = 5 V (TSC2010H) . . . 18
Figure 41. Large signal response with V_{CC} = 5 V (TSC2012H) . . . 19
Figure 42. Large signal response with V_{CC} = 2.7 V . . . 19
Figure 43. 12 V common mode step response recovery . . . 19
Figure 44. 50 V common mode step response recovery . . . 19
Figure 45. PSRR vs. frequency . . . 20
Figure 46. CMRR vs. frequency . . . 20
Figure 47. Positive overvoltage recovery V_{CC} = 2.7 V . . . 20
Figure 48. Negative overvoltage recovery V_{CC} = 2.7 V . . . 20
Figure 49. Overvoltage recovery vs. V_{icm} V_{CC} = 5 V . . . 21
Figure 50. Noise vs. frequency . . . 21

Figure 51. ON/OFF delay for shutdown mode . . . 21
Figure 52. Output voltage vs. V_{sense} beyond the sense operating . . . 21
Figure 53. Power-up time delay . . . 22
Figure 54. Power supply when $V_{icm} > V_{cc}$ . . . 23
Figure 55. Input bias current vs. common mode voltage V_{cc} = 5 V . . . 24
Figure 56. Power supply when V_{icm} < Gnd . . . 24
Figure 57. V_{ref} powered by an external voltage source . . . 25
Figure 58. Output reference to ground . . . 26
Figure 59. Output reference to V_{cc} . . . 26
Figure 60. Split supply . . . 27
Figure 61. External supply . . . 27
Figure 62. Schematic for V_{ocm} error . . . 29
Figure 63. Input current . . . 30
Figure 64. SHDN pin . . . 32
Figure 65. Capacitive load response at V_{cc} = 3.3 V . . . 32
Figure 66. Capacitive load response at V_{cc} = 3.3 V with a step of 100 mV . . . 33
Figure 67. RC filter when driving ADC . . . 33
Figure 68. Capacitive load response at V_{cc} = 3.3 V with 720 kHz RC filter . . . 34
Figure 69. Capacitive load response at V_{cc} = 3.3 V with 194 kHz RC filter . . . 34
Figure 70. Stability criteria with a serial resistor at V_{CC} = 5 V . . . 34
Figure 71. Start-up time with a decoupling capacitance of 100 nF . . . 35
Figure 72. Recommended layout . . . 36
Figure 73. EMIRR on pin+ . . . 37
Figure 74. EMIRR on pin- . . . 37
Figure 75. EMIRR on pin+ (TSC2010H) . . . 37
Figure 76. EMIRR on pin- (TSC2010H) . . . 37
Figure 77. Negative overvoltage recovery V_{CC} = ± 2.5 V . . . 38
Figure 78. Positive overvoltage recovery V_{CC} = ± 2.5 V . . . 38
Figure 79. H-bridge application . . . 39
Figure 80. TSC2011H H-bridge application . . . 40
Figure 81. Solenoid valve application . . . 41
Figure 82. SO8 package outline . . . 42

IMPORTANT NOTICE – READ CAREFULLY

STMicroelectronics NV and its subsidiaries (“ST”) reserve the right to make changes, corrections, enhancements, modifications, and improvements to ST products and/or to this document at any time without notice. Purchasers should obtain the latest relevant information on ST products before placing orders. ST products are sold pursuant to ST’s terms and conditions of sale in place at the time of order acknowledgment.

Purchasers are solely responsible for the choice, selection, and use of ST products and ST assumes no liability for application assistance or the design of purchasers’ products.

No license, express or implied, to any intellectual property right is granted by ST herein.

Resale of ST products with provisions different from the information set forth herein shall void any warranty granted by ST for such product.

ST and the ST logo are trademarks of ST. For additional information about ST trademarks, refer to www.st.com/trademarks. All other product or service names are the property of their respective owners.

Information in this document supersedes and replaces information previously supplied in any prior versions of this document.

© 2025 STMicroelectronics – All rights reserved