UCC2870x Constant-Voltage, Constant-Current Controller With Primary-Side Regulation

1 Features

- < 30-mW No-Load Power for 5-Star Rating
- Primary-Side Regulation (PSR) Eliminates Opto-Coupler
- ±5% Voltage and Current Regulation
- 130-kHz Maximum Switching Frequency Enables High-Power Density Charger Designs
- Quasi-Resonant Valley-Switching Operation for Highest Overall Efficiency
- Patent-Pending Frequency-Jitter Scheme to Ease EMI Compliance
- Wide VDD Range Allows Small Bias Capacitor
- Clamped Gate-Drive Output for MOSFET
- Protection Functions: Overvoltage, Low-Line, and Overcurrent
- Programmable Cable Compensation (UCC28700 Only)
- NTC Resistor Interface (UCC28701, UCC28702 and UCC28703 Only) With Fixed Cable Compensation Options
- SOT-23 Package

2 Applications

- USB-Compliant Adapters and Chargers for Consumer Electronics (Cell Phones, Tablets and Cameras)
- AC and DC Power Supplies

3 Description

The UCC28700 family of flyback power supply controllers provides Constant-Voltage (CV) and Constant-Current (CC) output regulation without the use of an optical coupler. The devices process information from the primary power switch and an auxiliary flyback winding for precise control of output voltage and current. Low start-up current, dynamically controlled operating states and a tailored modulation profile support very low standby power without sacrificing start-up time or output transient response.

Control algorithms in the UCC28700 family allow operating efficiencies to meet or exceed applicable standards. The output drive interfaces to a MOSFET power switch. Discontinuous Conduction Mode (DCM) with valley switching reduces switching losses. Modulation of switching frequency and primary current peak amplitude (FM and AM) keeps the conversion efficiency high across the entire load and line ranges.

The controllers have a maximum switching frequency of 130 kHz and always maintain control of the peak-primary current in the transformer. Protection features help keep primary and secondary component stresses in check. The UCC28700 allows the level of cable compensation to be programmed. The UCC28701, UCC28702, and UCC28703 devices allow remote temperature sensing using a Negative Temperature Coefficient (NTC) resistor while providing fixed cable-compensation levels.

Device Information(1)

PART NUMBER	PACKAGE	BODY SIZE (NOM)
UCC28700	SOT-23 (6)	2.90 mm × 1.60 mm
UCC28701		
UCC28702		
UCC28703		

(1) For all available packages, see the orderable addendum at the end of the datasheet.

Typical Application Schematic

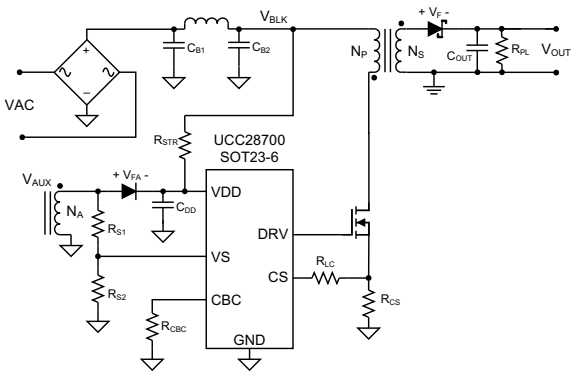

An IMPORTANT NOTICE at the end of this data sheet addresses availability, warranty, changes, use in safety-critical applications, intellectual property matters and other important disclaimers. PRODUCTION DATA.

Table of Contents

1 Features ... 1
2 Applications ... 1
3 Description ... 1
4 Revision History ... 2
5 Device Comparison Table ... 3
6 Pin Configuration and Functions ... 3
7 Specifications ... 4
7.1 Absolute Maximum Ratings ... 4
7.2 ESD Ratings ... 4
7.3 Recommended Operating Conditions ... 4
7.4 Thermal Information ... 5
7.5 Electrical Characteristics ... 5
7.6 Switching Characteristics ... 6
7.7 Typical Characteristics ... 7
8 Detailed Description ... 9
8.1 Overview ... 9
8.2 Functional Block Diagram ... 9
8.3 Feature Description ... 10
8.4 Device Functional Modes ... 12
9 Applications and Implementation ... 17
9.1 Application Information ... 17
9.2 Typical Application ... 17
10 Power Supply Recommendations ... 24
11 Layout ... 24
11.1 Layout Guidelines ... 24
11.2 Layout Example ... 25
12 Device and Documentation Support ... 25
12.1 Device Support ... 25
12.2 Documentation Support ... 27
12.3 Trademarks ... 28
12.4 Electrostatic Discharge Caution ... 28
12.5 Glossary ... 28
13 Mechanical, Packaging, and Orderable Information ... 28

4 Revision History

Changes from Original (July 2012) to Revision A	Page
• Added *Handling Rating* table, *Feature Description* section, *Device Functional Modes*, *Application and Implementation* section, *Power Supply Recommendations* section, *Layout* section, *Device and Documentation Support* section, and *Mechanical, Packaging, and Orderable Information* section	1

Copyright © 2012–2014, Texas Instruments Incorporated

5 Device Comparison Table[(1)(2)]

PART NUMBER	VERSION
UCC28700	Programmable cable compensation
UCC28701	NTC, 0 mV (at 5-V output) cable compensation option
UCC28702	NTC, 150 mV (at 5-V output) cable compensation option
UCC28703	NTC, 300 mV (at 5-V output) cable compensation option

(1) See Addendum for specific device ordering information.
(2) For other fixed cable compensation options, please consult the factory.

6 Pin Configuration and Functions

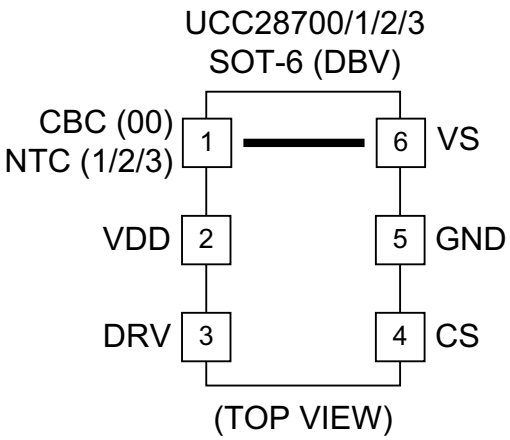

Pin Functions

PIN			I/O	DESCRIPTION
NAME	UCC28700 NO.	UCC28701/2/3 NO.		
CBC	1	—	I	Cable Compensation (CBC) is a programming pin for compensation of cable voltage drop. Cable compensation is programmed with a resistor to GND.
CS	4	4	I	Current Sense (CS) input connects to a ground-referenced current-sense resistor in series with the power switch. The resulting voltage is used to monitor and control the peak primary current. A series resistor can be added to this pin to compensate the peak switch current levels as the AC-mains input varies.
DRV	3	3	O	Drive (DRV) is an output used to drive the gate of an external high voltage MOSFET switching transistor.
GND	5	5	—	The Ground (GND) pin is both the reference pin for the controller and the low-side return for the drive output. Special care should be taken to return all AC decoupling capacitors as close as possible to this pin and avoid any common trace length with analog signal return paths.
NTC	—	1	I	NTC is an interface to an external NTC (negative temperature coefficient) resistor for remote temperature sensing. Pulling this pin low shuts down PWM action.
VDD	2	2	—	VDD is the bias supply input pin to the controller. A carefully-placed bypass capacitor to GND is required on this pin.
VS	6	6	I	Voltage Sense (VS) is an input used to provide voltage and timing feedback to the controller. This pin is connected to a voltage divider between an auxiliary winding and GND. The value of the upper resistor of this divider is used to program the AC-mains run and stop thresholds and line compensation at the CS pin.

Copyright © 2012–2014, Texas Instruments Incorporated

7 Specifications

7.1 Absolute Maximum Ratings[(1)]

over operating free-air temperature range (unless otherwise noted)

		MIN	MAX	UNIT
Bias supply voltage	V_{VDD}		38	V
Continuous gate current sink	I_{DRV}		50	mA
Continuous gate current source	I_{DRV}		Self-limiting	
Peak VS pin current	I_{VS}		−1.2	
Gate-drive voltage at DRV	V_{DRV}	−0.5	Self-limiting	V
Voltage range	VS	−0.75	7	
	CS, CBC (UCC28700), NTC (UCC28701/2/3)	−0.5	5	
Operating junction temperature range	T_J	−55	150	°C
Lead temperature 0.6 mm from case for 10 seconds			260	
Storage temperature, T_{stg}		–65	150	°C

(1) Stresses beyond those listed under Absolute Maximum Ratings may cause permanent damage to the device. These are stress ratings only and functional operation of the device at these or any other conditions beyond those indicated under *Recommended Operating Conditions* is not implied. Exposure to absolute-maximum-rated conditions for extended periods may affect device reliability. All voltages are with respect to GND. Currents are positive into, negative out of the specified terminal. These ratings apply over the operating ambient temperature ranges unless otherwise noted.

7.2 ESD Ratings

		VALUE	UNIT
$V_{(ESD)}$ Electrostatic discharge	Human-body model (HBM), per ANSI/ESDA/JEDEC JS-001[(1)]	±2000	V
	Charged-device model (CDM), per JEDEC specification JESD22-C101[(2)]	±500	

(1) JEDEC document JEP155 states that 500-V HBM allows safe manufacturing with a standard ESD control process.
(2) JEDEC document JEP157 states that 250-V CDM allows safe manufacturing with a standard ESD control process.

7.3 Recommended Operating Conditions

over operating free-air temperature range (unless otherwise noted)

		MIN	MAX	UNIT
VDD	Bias supply operating voltage	9	35	V
C_{VDD}	VDD bypass capacitor	0.047	1	µF
R_{CBC}	Cable-compensation resistance	10		kΩ
I_{VS}	VS pin current	−1		mA
T_J	Operating junction temperature	−20	125	°C

Copyright © 2012–2014, Texas Instruments Incorporated

7.4 Thermal Information

THERMAL METRIC[1]		UCC2870x DBV 6 PINS	UNIT
θ_{JA}	Junction-to-ambient thermal resistance[2]	180	°C/W
θ_{JCtop}	Junction-to-case (top) thermal resistance[3]	71.2	
θ_{JB}	Junction-to-board thermal resistance[4]	44.4	
ψ_{JT}	Junction-to-top characterization parameter[5]	5.1	
ψ_{JB}	Junction-to-board characterization parameter[6]	43.8	

(1) For more information about traditional and new thermal metrics, see the *IC Package Thermal Metrics* application report, SPRA953.
(2) The junction-to-ambient thermal resistance under natural convection is obtained in a simulation on a JEDEC-standard, high-K board, as specified in JESD51-7, in an environment described in JESD51-2a.
(3) The junction-to-case (top) thermal resistance is obtained by simulating a cold plate test on the package top. No specific JEDEC-standard test exists, but a close description can be found in the ANSI SEMI standard G30-88.
(4) The junction-to-board thermal resistance is obtained by simulating in an environment with a ring cold plate fixture to control the PCB temperature, as described in JESD51-8.
(5) The junction-to-top characterization parameter, ψ_{JT}, estimates the junction temperature of a device in a real system and is extracted from the simulation data for obtaining $R_{\theta JA}$, using a procedure described in JESD51-2a (sections 6 and 7).
(6) The junction-to-board characterization parameter, ψ_{JB}, estimates the junction temperature of a device in a real system and is extracted from the simulation data for obtaining $R_{\theta JA}$, using a procedure described in JESD51-2a (sections 6 and 7).

7.5 Electrical Characteristics

over operating free-air temperature range, VDD = 25 V, R_{CBC} = R_{NTC} = open, –20°C ≤ T_A ≤ 125°C, T_J = T_A (unless otherwise noted)

PARAMETER		TEST CONDITIONS	MIN	TYP	MAX	UNITS
BIAS SUPPLY INPUT						
I_{RUN}	Supply current, run	I_{DRV} = 0, run state		2.1	2.65	mA
I_{WAIT}	Supply current, wait	I_{DRV} = 0, wait state		85	110	µA
I_{START}	Supply current, start	I_{DRV} = 0, V_{VDD} = 18 V, start state		1	1.5	
I_{FAULT}	Supply current, fault	I_{DRV} = 0, fault state		2.1	2.8	mA
UNDER-VOLTAGE LOCKOUT						
$V_{VDD(on)}$	VDD turn-on threshold	V_{VDD} low to high	19	21	23	V
$V_{VDD(off)}$	VDD turn-off threshold	V_{VDD} high to low	7.7	8.1	8.45	
VS INPUT						
V_{VSR}	Regulating level	Measured at no-load condition, T_J = 25°C	4.01	4.05	4.09	V
V_{VSNC}	Negative clamp level	I_{VS} = -300 µA, volts below ground	190	250	325	mV
I_{VSB}	Input bias current	V_{VS} = 4 V	–0.25	0	0.25	µA
CS INPUT						
$V_{CST(max)}$	Max CS threshold voltage	V_{VS} = 3.7 V[1]	715	750	775	mV
$V_{CST(min)}$	Min CS threshold voltage	V_{VS} = 4.35 V[1]	230	250	270	
K_{AM}	AM control ratio	$V_{CST(max)}$ / $V_{CST(min)}$	2.75	3.0	3.15	V/V
V_{CCR}	constant-current regulating level	CC regulation constant	310	319	329	mV
K_{LC}	Line compensating current ratio	I_{VSLS} = -300 µA, I_{VSLS} / current out of CS pin	23	25	28	A/A
T_{CSLEB}	Leading-edge blanking time	DRV output duration, V_{CS} = 1 V	195	235	275	ns
DRV						
I_{DRS}	DRV source current	V_{DRV} = 8 V, V_{VDD} = 9 V	20	25		mA
R_{DRVLS}	DRV low-side drive resistance	I_{DRV} = 10 mA		6	12	Ω
V_{DRCL}	DRV clamp voltage	V_{VDD} = 35 V		14	16	V
R_{DRVSS}	DRV pull-down in start state		150	200	230	kΩ

(1) These devices automatically vary the control frequency and current sense thresholds to improve EMI performance, these threshold voltages and frequency limits represent average levels.

Copyright © 2012–2014, Texas Instruments Incorporated

Electrical Characteristics (continued)

over operating free-air temperature range, VDD = 25 V, R_{CBC} = R_{NTC} = open, –20°C ≤ T_A ≤ 125°C, T_J = T_A (unless otherwise noted)

PARAMETER		TEST CONDITIONS	MIN	TYP	MAX	UNITS
PROTECTION						
V_{OVP}	Over-voltage threshold	At VS input, T_J = 25°C	4.52	4.6	4.68	V
V_{OCP}	Over-current threshold	At CS input	1.4	1.5	1.6	
$I_{VSL(run)}$	VS line-sense run current	Current out of VS pin – increasing	190	220	260	µA
$I_{VSL(stop)}$	VS line-sense stop current	Current out of VS pin – decreasing	70	80	95	
K_{VSL}	VS line-sense ratio	$I_{VSL(run)}$ / $I_{VSL(stop)}$	2.5	2.8	3.05	A/A
$T_{J(stop)}$	Thermal shut-down temperature	Internal junction temperature		165		°C
CABLE COMPENSATION (UCC28700 ONLY)						
$V_{CBC(max)}$	Cable compensation maximum voltage	Voltage at CBC at full load	2.8	3.0	3.4	V
$V_{CVS(min)}$	Compensation at VS	V_{CBC} = open, change in VS regulating level at full load	–45	–15	25	mV
$V_{CVS(max)}$	Maximum compensation at VS	V_{CBC} = 0 V, change in VS regulating level at full load	275	320	365	
CABLE COMPENSATION (UCC28701, UCC28702, AND UCC28703 ONLY)						
V_{CVS}	Compensation at VS (UCC28701)	Change in VS regulating level at full load	–45	–15	25	mV
V_{CVS}	Compensation at VS (UCC28702)	Change in VS regulating level at full load		100		
V_{CVS}	Compensation at VS (UCC28703)	Change in VS regulating level at full load		200		
NTC INPUT (UCC28701, UCC28702, AND UCC28703 ONLY)						
V_{NTCTH}	NTC shut-down threshold	Fault UVLO cycle when below this threshold		0.95		V
I_{NTC}	NTC pull-up current	Current out of pin		105		µA

7.6 Switching Characteristics

over operating free-air temperature range (unless otherwise noted)

PARAMETER		TEST CONDITIONS	MIN	TYP	MAX	UNIT
$f_{SW(max)}$	Maximum switching frequency	V_{VS} = 3.7 V(1)	120	130	140	kHz
$f_{SW(min)}$	Minimum switching frequency	V_{VS} = 4.35 V(1)	875	1000	1100	Hz
T_{ZTO}	Zero-crossing timeout delay		1.8	2.1	2.45	µs

(1) These devices automatically vary the control frequency and current sense thresholds to improve EMI performance, these threshold voltages and frequency limits represent average levels.

Copyright © 2012–2014, Texas Instruments Incorporated

7.7 Typical Characteristics

At VDD = 25 V, unless otherwise noted.

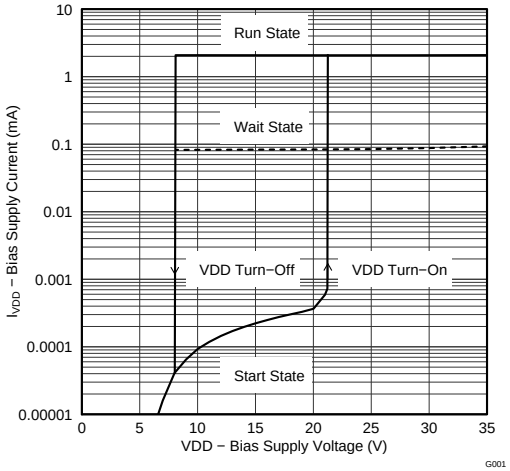

Figure 1. Bias Supply Current vs. Bias Supply Voltage

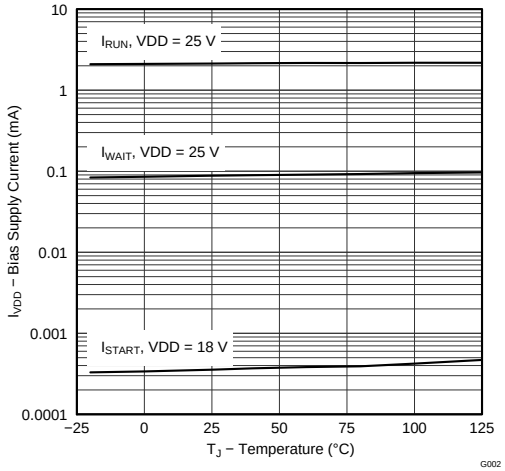

Figure 2. Bias Supply Current vs. Temperature

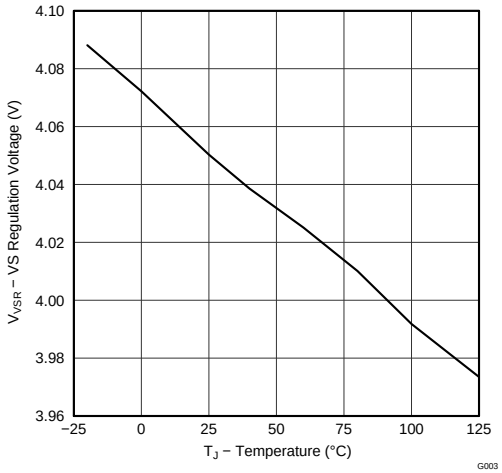

Figure 3. VS Regulation Voltage vs. Temperature

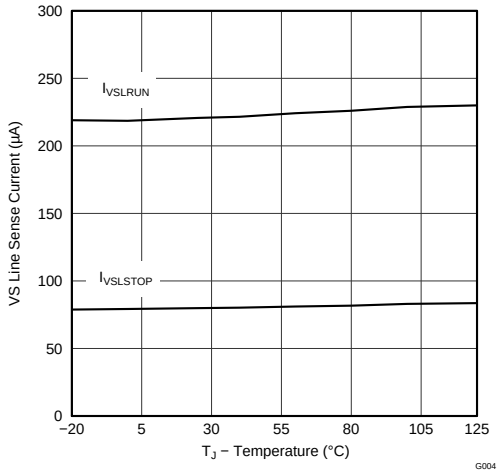

Figure 4. Line-Sense Current vs. Temperature

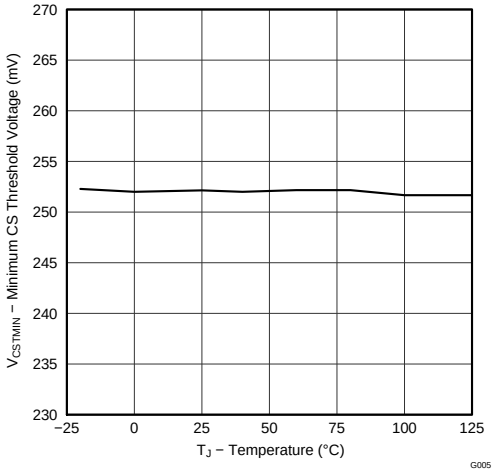

Figure 5. Minimum CS Threshold Voltage vs. Temperature

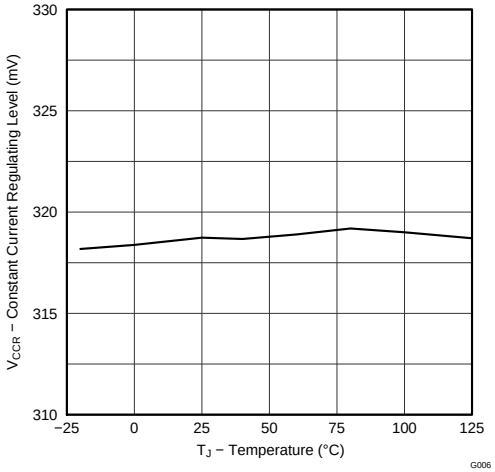

Figure 6. Constant-Current Regulating Level vs. Temperature

Typical Characteristics (continued)

At VDD = 25 V, unless otherwise noted.

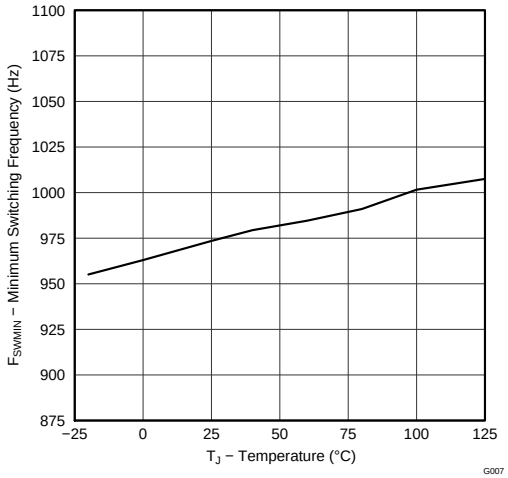

Figure 7. Minimum Switching Frequency vs. Temperature

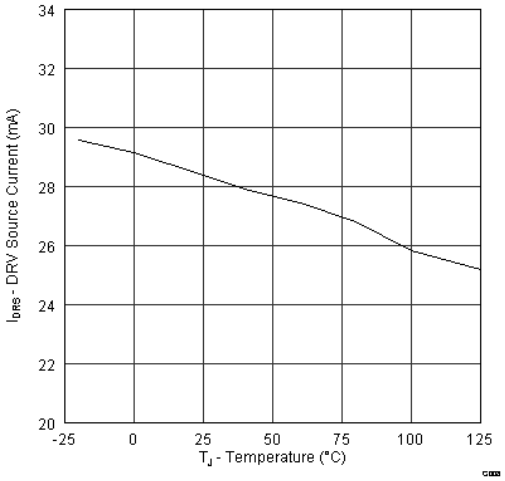

V_{DRV} = 8 V, V_{VDD} = 9 V

Figure 8. DRV Source Current vs. Temperature

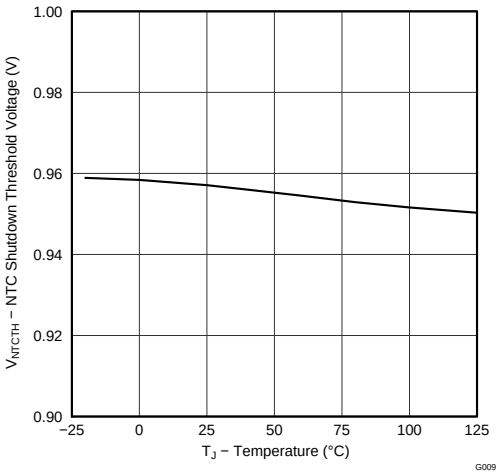

Figure 9. NTC Shutdown Threshold Voltage vs. Temperature

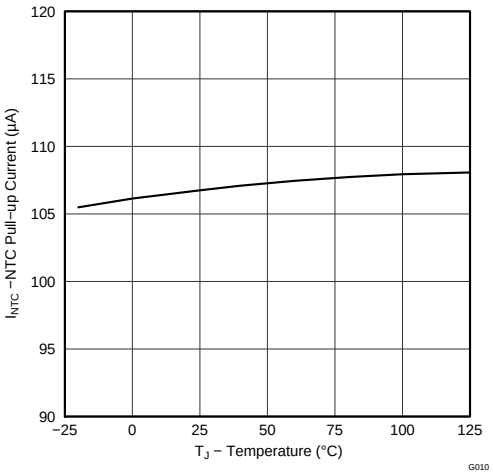

Figure 10. NTC Pullup Current vs. Temperature

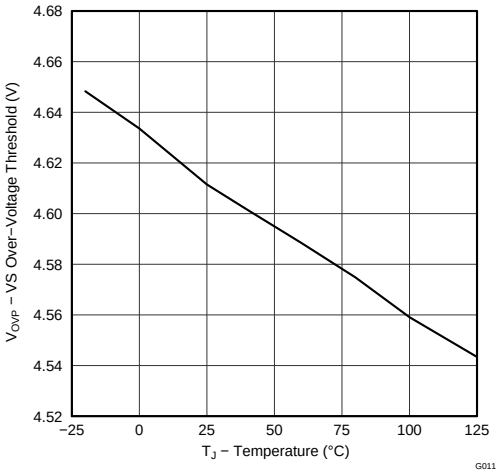

Figure 11. Overvoltage Threshold vs. Temperature

Copyright © 2012–2014, Texas Instruments Incorporated

8 Detailed Description

8.1 Overview

The UCC28700 is a flyback power supply controller which provides accurate voltage and constant current regulation with primary-side feedback, eliminating the need for opto-coupler feedback circuits. The controller operates in discontinuous conduction mode with valley-switching to minimize switching losses. The modulation scheme is a combination of frequency and primary peak current modulation to provide high conversion efficiency across the load range. The control law provides a wide-dynamic operating range of output power to achieve the <30-mW stand-by power requirement.

Another feature beneficial to achieve low stand-by power without excessive start-up time is a wide operating VDD range to allow a high-value VDD start-up resistance and low-value VDD capacitance. During low-power operating ranges the device has power management features to reduce the device operating current at operating frequencies below 44 kHz. The UCC28700 controller includes features in the modulator to reduce the EMI peak energy of the fundamental switching frequency and harmonics. Accurate voltage and constant current regulation, fast dynamic response, and fault protection are achieved with primary-side control. A complete charger solution can be realized with a straightforward design process, low cost and low component count.

8.2 Functional Block Diagram

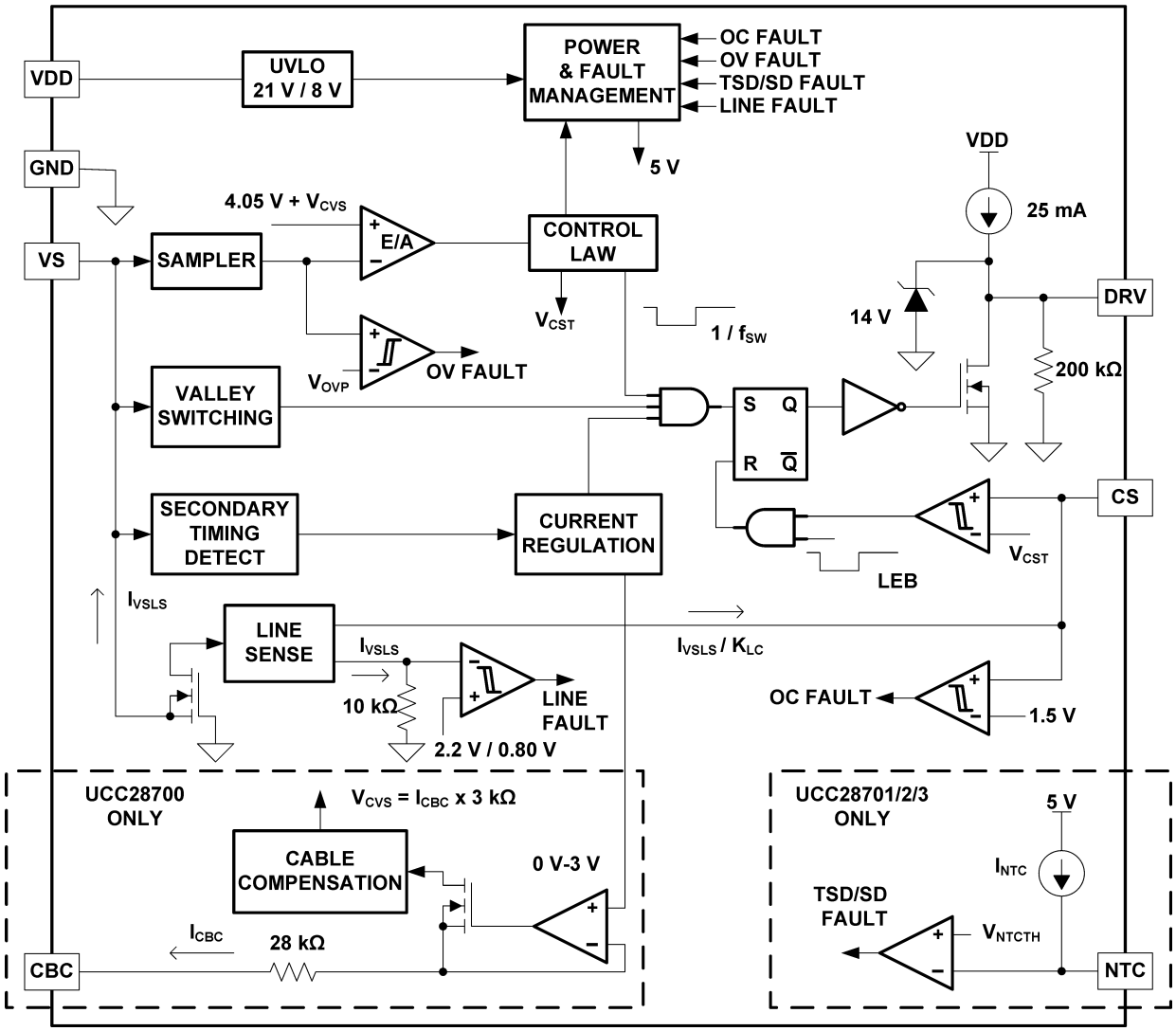

8.3 Feature Description

8.3.1 Detailed Pin Description

8.3.1.1 VDD (Device Bias Voltage Supply)

The VDD pin is connected to a bypass capacitor to ground and a start-up resistance to the input bulk capacitor (+) terminal. The VDD turn-on UVLO threshold is 21 V and turn-off UVLO threshold is 8.1 V, with an available operating range up to 35 V. The USB charging specification requires the output current to operate in constant-current mode from 5 V to a minimum of 2 V; this is easily achieved with a nominal VDD of approximately 25 V. The additional VDD headroom up to 35 V allows for VDD to rise due to the leakage energy delivered to the VDD capacitor in high-load conditions. Also, the wide VDD range provides the advantage of selecting a relatively small VDD capacitor and high-value start-up resistance to minimize no-load stand-by power loss in the start-up resistor.

8.3.1.2 GND (Ground)

This is a single ground reference external to the device for the gate drive current and analog signal reference. Place the VDD bypass capacitor close to GND and VDD with short traces to minimize noise on the VS and CS signal pins.

8.3.1.3 VS (Voltage-Sense)

The VS pin is connected to a resistor divider from the auxiliary winding to ground. The output-voltage feedback information is sampled at the end of the transformer secondary current demagnetization time to provide an accurate representation of the output voltage. Timing information to achieve valley-switching and to control the duty cycle of the secondary transformer current is determined by the waveform on the VS pin. Avoid placing a filter capacitor on this input which would interfere with accurate sensing of this waveform.

The VS pin also senses the bulk capacitor voltage to provide for AC-input run and stop thresholds, and to compensate the current-sense threshold across the AC-input range. This information is sensed during the MOSFET on-time. For the AC-input run/stop function, the run threshold on VS is 220 µA and the stop threshold is 80 µA. The values for the auxilliary voltage divider upper-resistor R_{S1} and lower-resistor R_{S2} can be determined by the equations below.

$$R_{S1} = \frac{V_{IN(run)} \times \sqrt{2}}{N_{PA} \times I_{VSL(run)}}$$

where

- N_{PA} is the transformer primary-to-auxiliary turns ratio,
- $V_{IN(run)}$ is the AC RMS voltage to enable turn-on of the controller (run),
- $I_{VSL(run)}$ is the run-threshold for the current pulled out of the VS pin during the MOSFET on-time. (see the *Electrical Characteristics* table) (1)

$$R_{S2} = \frac{R_{S1} \times V_{VSR}}{N_{AS} \times (V_{OCV} + V_F) - V_{VSR}}$$

where

- V_{OCV} is the converter regulated output voltage,
- V_F is the output rectifier forward drop at near-zero current,
- N_{AS} is the transformer auxiliary to secondary turns ratio,
- R_{S1} is the VS divider high-side resistance,
- V_{VSR} is the CV regulating level at the VS input (see the *Electrical Characteristics* table). (2)

Copyright © 2012–2014, Texas Instruments Incorporated

Feature Description (continued)

8.3.1.4 DRV (Gate Drive)

The DRV pin is connected to the MOSFET gate pin, usually through a series resistor. The gate driver provides a gate-drive signal limited to 14 V. The turn-on characteristic of the driver is a 25-mA current source which limits the turn-on dv/dt of the MOSFET drain and reduces the leading-edge current spike, but still provides gate-drive current to overcome the Miller plateau. The gate-drive turn-off current is determined by the low-side driver $R_{DS(on)}$ and any external gate-drive resistance. The user can reduce the turn-off MOSFET drain dv/dt by adding external gate resistance.

8.3.1.5 CS (Current Sense)

The current-sense pin is connected through a series resistor (R_{LC}) to the current-sense resistor (R_{CS}). The current-sense threshold is 0.75 V for $I_{PP(max)}$ and 0.25 V for $I_{PP(min)}$. The series resistor R_{LC} provides the function of feed-forward line compensation to eliminate change in I_{PP} due to change in di/dt and the propagation delay of the internal comparator and MOSFET turn-off time. There is an internal leading-edge blanking time of 235 ns to eliminate sensitivity to the MOSFET turn-on current spike. It should not be necessary to place a bypass capacitor on the CS pin. The value of R_{CS} is determined by the target output current in constant-current (CC) regulation. The values of R_{CS} and R_{LC} can be determined by the equations below. The term η_{XFMR} is intended to account for the energy stored in the transformer but not delivered to the secondary. This includes transformer resistance and core loss, bias power, and primary-to-secondary leakage ratio.

Example: With a transformer core and winding loss of 5%, primary-to-secondary leakage inductance of 3.5%, and bias power to output power ratio of 1.5%. The η_{XFMR} value is approximately: 1 - 0.05 - 0.035 - 0.015 = 0.9.

$$R_{CS} = \frac{V_{CCR} \times N_{PS}}{2 I_{OCC}} \times \eta_{XFMR}$$

where

- V_{CCR} is a current regulation constant (see the *Electrical Characteristics* table),
- N_{PS} is the transformer primary-to-secondary turns ratio (a ratio of 13 to 15 is recommended for 5-V output),
- I_{OCC} is the target output current in constant-current regulation,
- η_{XFMR} is the transformer efficiency. (3)

$$R_{LC} = \frac{K_{LC} \times R_{S1} \times R_{CS} \times T_D \times N_{PA}}{L_P}$$

where

- R_{S1} is the VS pin high-side resistor value,
- R_{CS} is the current-sense resistor value,
- T_D is the current-sense delay including MOSFET turn-off delay, add ~50 ns to MOSFET delay,
- N_{PA} is the transformer primary-to-auxiliary turns ratio,
- L_P is the transformer primary inductance,
- K_{LC} is a current-scaling constant (see the *Electrical Characteristics* table). (4)

8.3.1.6 CBC (Cable Compensation), Pin 1 UCC28700

The cable compensation pin is connected to a resistor to ground to program the amount of output voltage compensation to offset cable resistance. The cable compensation block provides a 0-V to 3-V voltage level on the CBC pin corresponding to 0 to I_{OCC} output current. The resistance selected on the CBC pin programs a current mirror that is summed into the VS feedback divider therefore increasing the output voltage as I_{OUT} increases. There is an internal series resistance of 28 kΩ to the CBC pin which sets a maximum cable compensation of a 5-V output to 400 mV when CBC is shorted to ground. The CBC resistance value can be determined by the equation below.

$$R_{CBC} = \frac{V_{CBC(max)} \times 3\ k\Omega \times (V_{OCV} + V_F)}{V_{VSR} \times V_{OCBC}} - 28\ k\Omega$$

Feature Description (continued)

where

- V_O is the output voltage,
- V_F is the diode forward voltage,
- V_{OCBC} is the target cable compensation voltage at the output terminals,
- $V_{CBC(max)}$ is the maximum voltage at the cable compensation pin at the maximum converter output current (see the *Electrical Characteristics* table),
- V_{VSR} is the CV regulating level at the VS input (see the *Electrical Characteristics* table). (5)

8.3.1.7 NTC (NTC Thermistor Shut-down), Pin 1 UCC28701/2/3

These versions of the UCC28700 family utilize pin 1 for an external NTC thermistor to allow user-programmable external thermal shut-down. The shut-down threshold is 0.95 V with an internal 105-µA current source which results in a 9.05-kΩ thermistor shut-down threshold. These controllers have either zero or fixed internal cable compensation.

8.3.2 Fault Protection

There is comprehensive fault protection incorporated into the UCC28700. Protection functions include:

- Output overvoltage
- Input undervoltage
- Internal overtemperature
- Primary overcurrent fault
- CS pin fault
- VS pin fault

A UVLO reset and restart sequence applies for all fault protection events.

The output over-voltage function is determined by the voltage feedback on the VS pin. If the voltage sample on VS exceeds 115% of the nominal V_{OUT}, the device stops switching and keeps the internal circuitry enabled to discharge the VDD capacitor to the UVLO turn-off threshold. After that, the device returns to the start state and a start-up sequence ensues.

The UCC28700 always operates with cycle-by-cycle primary peak current control. The normal operating range of the CS pin is 0.75 V to 0.25 V. There is additional protection if the CS pin reaches 1.5 V. This results in a UVLO reset and restart sequence. There is no leading-edge blanking on the 1.5-V threshold on CS.

The line input run and stop thresholds are determined by current information at the VS pin during the MOSFET on-time. While the VS pin is clamped close to GND during the MOSFET on-time, the current through R_{S1} is monitored to determine a sample of the bulk capacitor voltage. A wide separation of run and stop thresholds allows clean start-up and shut-down of the power supply with the line voltage. The run current threshold is 220 µA and the stop current threshold is 80 µA.

The internal overtemperature protection threshold is 165°C. If the junction temperature reaches this threshold the device initiates a UVLO reset cycle. If the temperature is still high at the end of the UVLO cycle, the protection cycle repeats.

Protection is included in the event of component failures on the VS pin. If complete loss of feedback information on the VS pin occurs, the controller stops switching and restarts.

8.4 Device Functional Modes

8.4.1 Primary-Side Voltage Regulation

Figure 12 shows a simplified flyback convertor with the main voltage regulation blocks of the device shown. The power train operation is the same as any DCM flyback circuit but accurate output voltage and current sensing is the key to primary-side control.

Copyright © 2012–2014, Texas Instruments Incorporated

Device Functional Modes (continued)

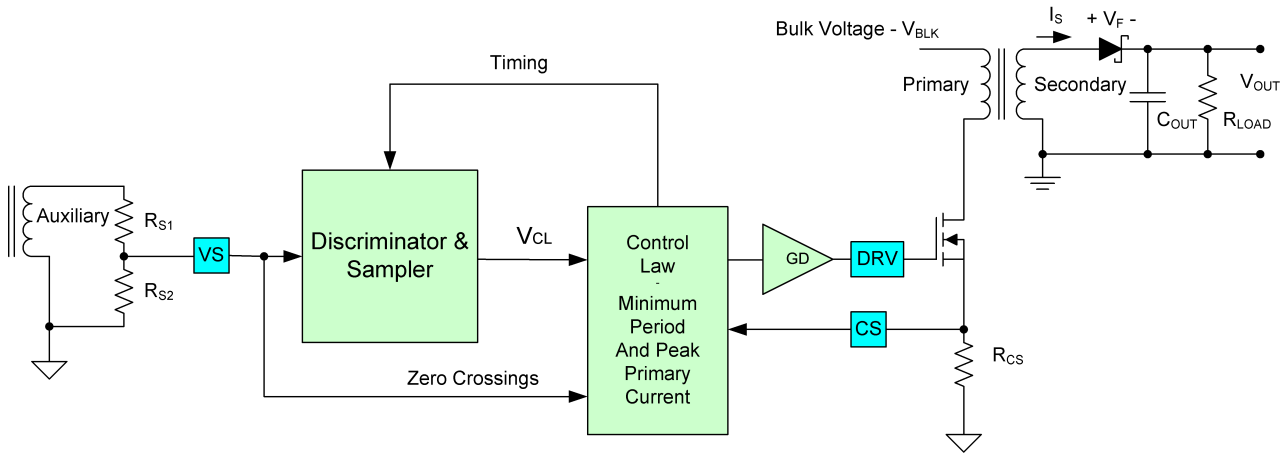

Figure 12. Simplified Flyback Convertor (with the main voltage regulation blocks)

In primary-side control, the output voltage is sensed on the auxiliary winding during the transfer of transformer energy to the secondary. As shown in Figure 13 it is clear there is a down slope representing a decreasing total rectifier V_F and resistance voltage drop ($I_S R_S$) as the secondary current decreases to zero. To achieve an accurate representation of the secondary output voltage on the auxiliary winding, the discriminator reliably blocks the leakage inductance reset and ringing, continuously samples the auxiliary voltage during the down slope after the ringing is diminished, and captures the error signal at the time the secondary winding reaches zero current. The internal reference on VS is 4.05 V; the resistor divider is selected as outlined in the VS pin description.

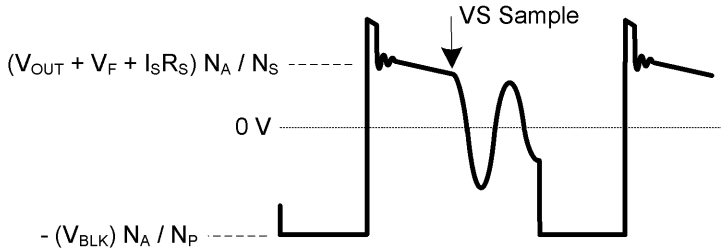

Figure 13. Auxiliary Winding Voltage

The UCC28700 VS signal sampler includes signal discrimination methods to ensure an accurate sample of the output voltage from the auxiliary winding. There are however some details of the auxiliary winding signal to ensure reliable operation, specifically the reset time of the leakage inductance and the duration of any subsequent leakage inductance ring. Refer to Figure 14 for a detailed illustration of waveform criteria to ensure a reliable sample on the VS pin. The first detail to examine is the duration of the leakage inductance reset pedestal, T_{LK_RESET} in Figure 14. Because this can mimic the waveform of the secondary current decay, followed by a sharp downslope, it is important to keep the leakage reset time less than 500 ns for I_{PRI} minimum, and less than 1.5 µs for I_{PRI} maximum. The second detail is the amplitude of ringing on the V_{AUX} waveform following T_{LK_RESET}. The peak-to-peak voltage at the VS pin should be less than approximately 100 mV_{p-p} at least 200 ns before the end of the demagnetization time, t_{DM}. If there is a concern with excessive ringing, it usually occurs during light or no-load conditions, when t_{DM} is at the minimum. The tolerable ripple on VS is scaled up to the auxiliary winding voltage by R_{S1} and R_{S2}, and is equal to 100 mV x (R_{S1} + R_{S2}) / R_{S2}.

Device Functional Modes (continued)

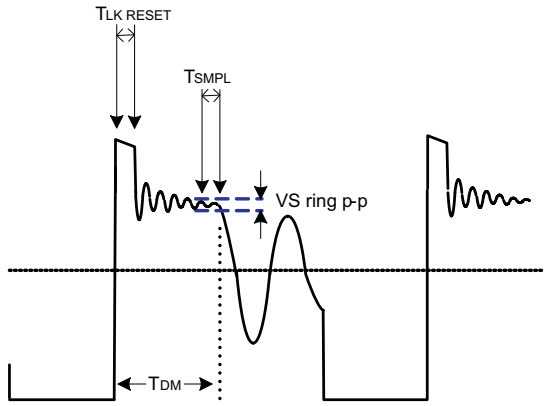

Figure 14. Auxiliary Waveform Details

During voltage regulation, the controller operates in frequency modulation mode and amplitude modulation mode as illustrated in Figure 15 below. The internal operating frequency limits of the device are 130 kHz maximum and 1 kHz minimum. The transformer primary inductance and primary peak current chosen sets the maximum operating frequency of the converter. The output preload resistor and efficiency at low power determines the converter minimum operating frequency. There is no stability compensation required for the UCC28700 controller.

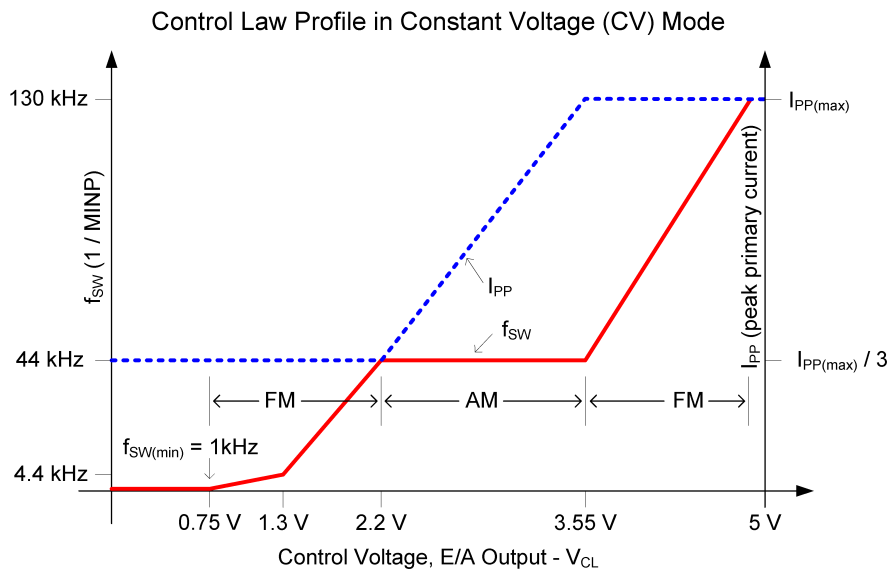

Figure 15. Frequency and Amplitude Modulation Modes (during voltage regulation)

8.4.2 Primary-Side Current Regulation

Timing information at the VS pin and current information at the CS pin allow accurate regulation of the secondary average current. The control law dictates that as power is increased in CV regulation and approaching CC regulation the primary-peak current is at $I_{PP(max)}$. Referring to Figure 16 below, the primary-peak current, turns ratio, secondary demagnetization time (t_{DM}), and switching period (T_{SW}) determine the secondary average output current. Ignoring leakage inductance effects, the average output current is given by Equation 6. When the average output current reaches the regulation reference in the current control block, the controller operates in frequency modulation mode to control the output current at any output voltage at or below the voltage regulation target as long as the auxiliary winding can keep VDD above the UVLO turn-off threshold.

Copyright © 2012–2014, Texas Instruments Incorporated

Device Functional Modes (continued)

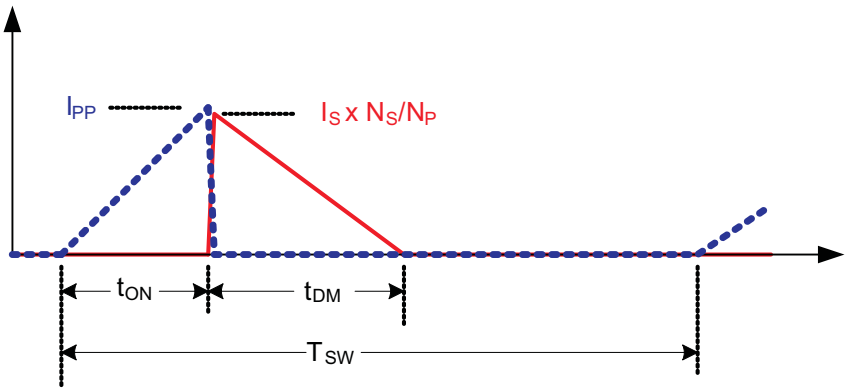

Figure 16. Transformer Currents

$$I_{OUT} = \frac{I_{PP}}{2} \times \frac{N_P}{N_S} \times \frac{t_{DM}}{T_{SW}} \tag{6}$$

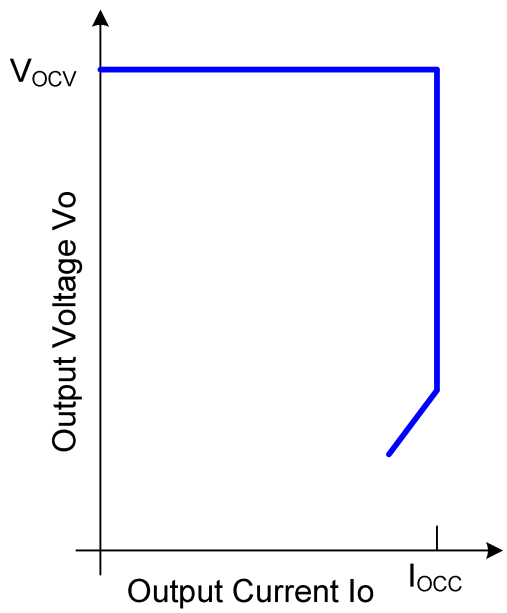

Figure 17. Typical Target Output V-I Characteristic

8.4.3 Valley-Switching

The UCC28700 utilizes valley-switching to reduce switching losses in the MOSFET, to reduce induced-EMI, and to minimize the turn-on current spike at the sense resistor. The controller operates in valley-switching in all load conditions unless the V_{DS} ringing has diminished.

Referring to Figure 18 below, the UCC28700 operates in a valley-skipping mode in most load conditions to maintain an accurate voltage or current regulation point and still switch on the lowest available V_{DS} voltage.

Device Functional Modes (continued)

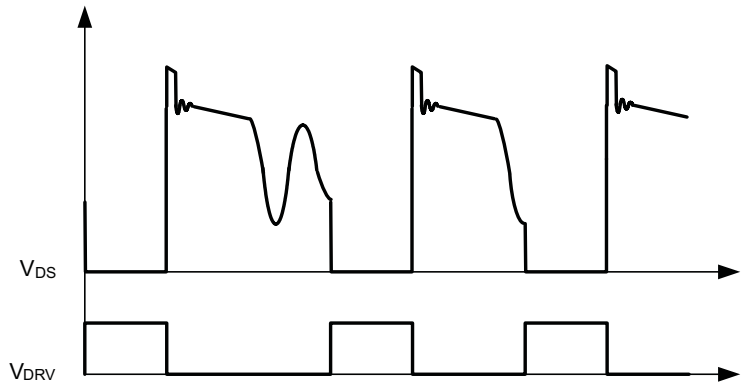

Figure 18. Valley-Skipping Mode

8.4.4 Start-Up Operation

Upon application of input voltage to the converter, the start-up resistor connected to VDD from the bulk capacitor voltage (V_{BLK}) charges the VDD capacitor. During charging of the VDD capacitor the device bias supply current is less than 1.5 µA. When VDD reaches the 21-V UVLO turn-on threshold, the controller is enabled and the converter starts switching. The initial three cycles are limited to $I_{PP(min)}$. This allows sensing any initial input or output faults with minimal power delivery. After the initial three cycles at minimum $I_{PP(min)}$, the controller responds to the condition dictated by the control law. The converter remains in discontinuous mode during charging of the output capacitor(s), maintaining a constant output current until the output voltage is in regulation.

Copyright © 2012–2014, Texas Instruments Incorporated

9 Applications and Implementation

NOTE

Information in the following applications sections is not part of the TI component specification, and TI does not warrant its accuracy or completeness. TI's customers are responsible for determining suitability of components for their purposes. Customers should validate and test their design implementation to confirm system functionality.

9.1 Application Information

The UCC2870x family of flyback power supply controllers provides constant voltage (CV) and constant current (CC) output regulation to help meet USB-compliant adaptors and charger requirements. These devices use the information obtained from auxiliary winding sensing (VS) to control the output voltage and do not require optocoupler/TL431 feedback circuitry. Not requiring optocoupler feedback reduces the component count and makes the design more cost effective.

9.2 Typical Application

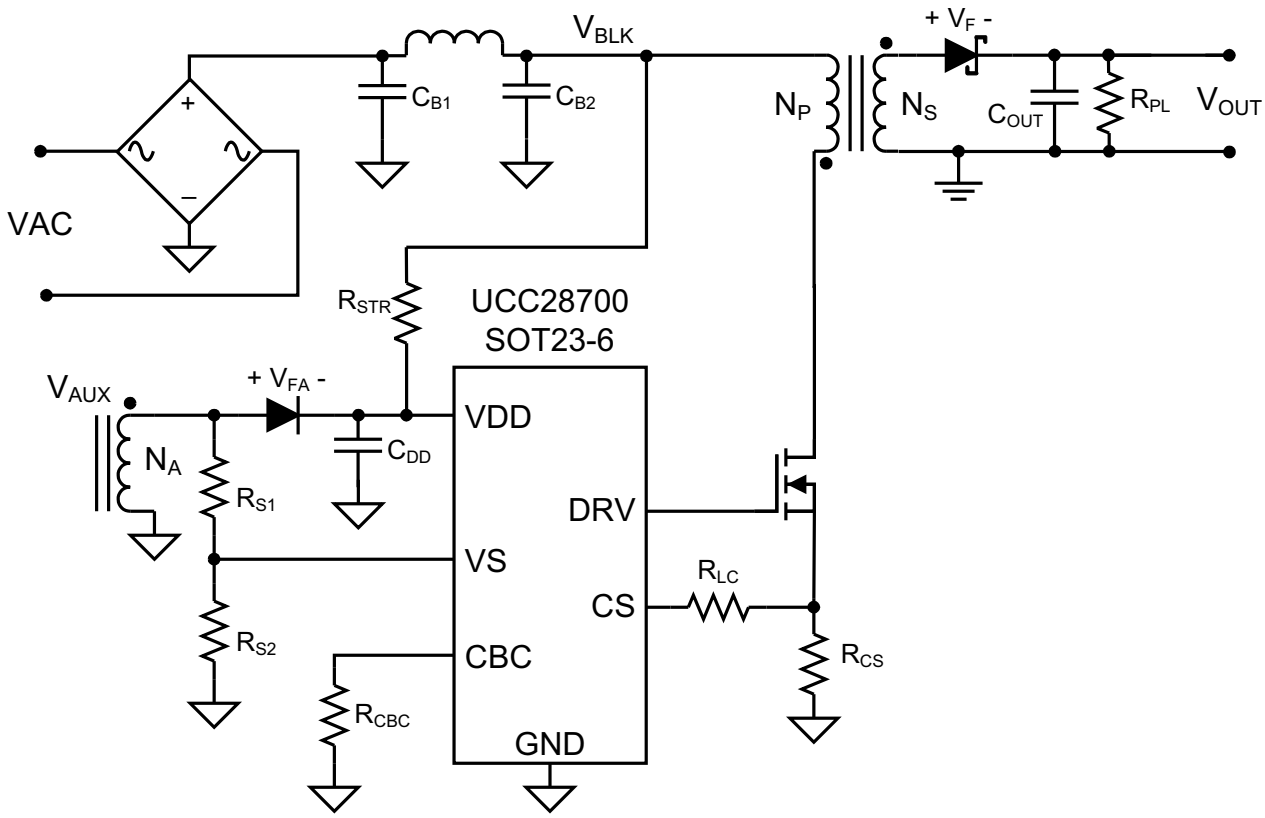

Figure 19. Typical Application Circuit

9.2.1 Design Requirements

Table 1. Design Parameters

PARAMETER	SYMBOL	NOTES AND CONDITIONS	MIN	NOM	MAX	UNIT
INPUT CHARACTERISTICS						
Input Voltage	V_{IN}		100	115/230	240	V
Line Frequency	f_{LINE}		47	50/60	64	Hz
No Load Input Power	P_{SB_CONV}	V_{IN} = Nom, I_O = 0A			30	mW

Typical Application (continued)

Table 1. Design Parameters (continued)

PARAMETER	SYMBOL	NOTES AND CONDITIONS	MIN	NOM	MAX	UNIT
Brownout Voltage	$V_{IN(RUN)}$	I_O = Nom		70		V
OUTPUT CHARACTERISTICS						
Output Voltage	V_O	V_{IN} = Nom, I_O = Nom	4.75	5	5.25	V
Output Voltage Ripple	V_{RIPPLE}	V_{IN} = Nom, I_O = Max			0.1	V
Output Current	I_O	V_{IN} = Min to Max		1	1.05	A
Output OVP	V_{OVP}	I_{OUT} = Min to Max		5.75		V
Transient Response						
Load Step (V_O = 4.1 V to 6 V)	$V_{O\Delta}$	(0.1 to 0.6 A) or (0.6 to 0.1 A) $V_{O\Delta}$ = 0.9 V for C_{OUT} calculation in applications section	4.1	5	6	A
SYSTEMS CHARACTERISTICS						
Switching Frequency					105	kHz
Full Load Efficiency (115/230 V RMS Input)	η	I_O = 1 A	74%		76%	

9.2.2 Detailed Design Procedure

This procedure outlines the steps to design a constant-voltage, constant-current flyback converter using the UCC28700 family of controllers. Please refer to the Figure 19 for circuit details and section *Device Nomenclature* for variable definitions used in the applications equations below.

9.2.2.1 Transformer Parameter Verification

The transformer turns ratio selected affects the MOSFET V_{DS} and secondary rectifier reverse voltage so these should be reviewed. The UCC28700 controller requires a minimum on time of the MOSFET (T_{ON}) and minimum D_{MAG} time (T_{DMAG}) of the secondary rectifier in the high line, minimum load condition. The selection of F_{MAX}, L_P and R_{CS} affects the minimum T_{ON} and T_{DMAG}.

The secondary rectifier and MOSFET voltage stress can be determined by the equations below.

$$V_{REV} = \frac{V_{IN(max)} \times \sqrt{2}}{N_{PS}} + V_{OCV} + V_{OCBC} \tag{7}$$

For the MOSFET V_{DS} voltage stress, an estimated leakage inductance voltage spike (V_{LK}) needs to be included.

$$V_{DSPK} = \left(V_{IN(max)} \times \sqrt{2}\right) + \left(V_{OCV} + V_F + V_{OCBC}\right) \times N_{PS} + V_{LK} \tag{8}$$

The following equations are used to determine if the minimum T_{ON} target of 300 ns and minimum T_{DMAG} target of 1.1 µs is achieved.

$$T_{ON(min)} = \frac{L_P}{V_{IN(max)} \times \sqrt{2}} \times \frac{I_{PP(max)} \times V_{CST(min)}}{V_{CST(max)}} \tag{9}$$

$$T_{DMAG(min)} = \frac{T_{ON(min)} \times V_{IN(max)} \times \sqrt{2}}{N_{PS} \times \left(V_{OCV} + V_F\right)} \tag{10}$$

9.2.2.2 Output Capacitance

The output capacitance value is typically determined by the transient response requirement from no-load. For example, in some USB charger applications there is a requirement to maintain a minimum V_O of 4.1 V with a load-step transient of 0 mA to 500 mA . The equation below assumes that the switching frequency can be at the UCC28700 minimum of $f_{SW(min)}$.

Copyright © 2012–2014, Texas Instruments Incorporated

$$C_{OUT} = \frac{I_{TRAN}\left(\frac{1}{f_{SW(min)}} + 150\ \mu s\right)}{V_{O\Delta}} \tag{11}$$

Another consideration of the output capacitor(s) is the ripple voltage requirement which is reviewed based on secondary peak current and ESR. A margin of 20% is added to the capacitor ESR requirement in the equation below.

$$R_{ESR} = \frac{V_{RIPPLE} \times 0.8}{I_{PP(max)} \times N_{PS}} \tag{12}$$

9.2.2.3 VDD Capacitance, C_{DD}

The capacitance on VDD needs to supply the device operating current until the output of the converter reaches the target minimum operating voltage in constant-current regulation. At this time the auxiliary winding can sustain the voltage to the UCC28700. The total output current available to the load and to charge the output capacitors is the constant-current regulation target. The equation below assumes the output current of the flyback is available to charge the output capacitance until the minimum output voltage is achieved. There is an estimated 1 mA of gate-drive current in the equation and 1 V of margin added to VDD.

$$C_{DD} = \frac{\left(I_{RUN} + 1\,mA\right) \times \frac{C_{OUT} \times V_{OCC}}{I_O}}{\left(V_{DD(on)} - V_{DD(off)}\right) - 1\,V} \tag{13}$$

9.2.2.4 VDD Start-Up Resistance, R_{STR}

Once the VDD capacitance is known, the start-up resistance from V_{BULK} to achieve the turn-on time target can be determined.

$$R_{STR} = \frac{\sqrt{2} \times V_{IN(min)}}{I_{START} + \frac{V_{DD(on)} \times C_{DD}}{T_{STR}}} \tag{14}$$

9.2.2.5 VS Resistor Divider, Line Compensation, and Cable Compensation

The VS divider resistors determine the output voltage regulation point of the flyback converter, also the high-side divider resistor (R_{S1}) determines the line voltage at which the controller enables continuous DRV operation. R_{S1} is initially determined based on transformer auxiliary to primary turns ratio and desired input voltage operating threshold.

$$R_{S1} = \frac{V_{IN(run)} \times \sqrt{2}}{N_{PA} \times I_{VSL(run)}} \tag{15}$$

The low-side VS pin resistor is selected based on desired V_O regulation voltage.

$$R_{S2} = \frac{R_{S1} \times V_{VSR}}{N_{AS} \times \left(V_{OCV} + V_F\right) - V_{VSR}} \tag{16}$$

The UCC28700 can maintain tight constant-current regulation over input line by utilizing the line compensation feature. The line compensation resistor (R_{LC}) value is determined by current flowing in R_{S1} and expected gate drive and MOSFET turn-off delay. Assume a 50-ns internal delay in the UCC28700.

$$R_{LC} = \frac{K_{LC} \times R_{S1} \times R_{CS} \times T_D \times N_{PA}}{L_P} \tag{17}$$

On the UCC28700 which has adjustable cable compensation, the resistance for the desired compensation level at the output terminals can be determined using the equation below.

$$R_{CBC} = \frac{V_{CBC(max)} \times 3\ k\Omega \times (V_{OCV} + V_F)}{V_{VSR} \times V_{OCBC}} - 28\ k\Omega \tag{18}$$

9.2.2.6 Input Bulk Capacitance and Minimum Bulk Voltage

Determine the minimum voltage on the input capacitance, C_{B1} and C_{B2} total, in order to determine the maximum Np to Ns turns ratio of the transformer. The input power of the converter based on target full-load efficiency, minimum input RMS voltage, and minimum AC input frequency are used to determine the input capacitance requirement.

Maximum input power is determined based on V_{OCV}, I_{OCC}, and the full-load efficiency target.

$$P_{IN} = \frac{V_{OCV} \times I_{OCC}}{\eta} \tag{19}$$

The below equation provides an accurate solution for input capacitance based on a target minimum bulk capacitor voltage. To target a given input capacitance value, iterate the minimum capacitor voltage to achieve the target capacitance.

$$C_{BULK} = \frac{2P_{IN} \times \left(0.25 + \frac{1}{2\pi} \times \arcsin\left(\frac{V_{BULK(min)}}{\sqrt{2} \times V_{IN(min)}}\right)\right)}{\left(2V_{IN(min)}^{\ 2} - V_{BULK(min)}^{\ 2}\right) \times f_{LINE}} \tag{20}$$

9.2.2.7 Transformer Turns Ratio, Inductance, Primary-Peak Current

The maximum primary-to-secondary turns ratio can be determined by the target maximum switching frequency at full load, the minimum input capacitor bulk voltage, and the estimated DCM quasi-resonant time.

Initially determine the maximum available total duty cycle of the on time and secondary conduction time based on target switching frequency and DCM resonant time. For DCM resonant time, assume 500 kHz if you do not have an estimate from previous designs. For the transition mode operation limit, the period required from the end of secondary current conduction to the first valley of the V_{DS} voltage is ½ of the DCM resonant period, or 1 µs assuming 500-kHz resonant frequency. D_{MAX} can be determined using the equation below.

$$D_{MAX} = 1 - \left(\frac{T_R}{2} \times f_{MAX}\right) - D_{MAGCC} \tag{21}$$

Once D_{MAX} is known, the maximum turns ratio of the primary to secondary can be determined with the equation below. D_{MAGCC} is defined as the secondary diode conduction duty cycle during constant-current, CC, operation. It is set internally by the UCC28700 at 0.425. The total voltage on the secondary winding needs to be determined; which is the sum of V_{OCV}, the secondary rectifier V_F, and the cable compensation voltage (V_{OCBC}). For the 5-V USB charger applications, a turns ratio range of 13 to 15 is typically used.

$$N_{PS(max)} = \frac{D_{MAX} \times V_{BULK(min)}}{D_{MAGCC} \times (V_{OCV} + V_F + V_{OCBC})} \tag{22}$$

Once an optimum turns ratio is determined from a detailed transformer design, use this ratio for the following parameters.

The UCC28700 controller constant-current regulation is achieved by maintaining a maximum D_{MAG} duty cycle of 0.425 at the maximum primary current setting. The transformer turns ratio and constant-current regulating voltage determine the current sense resistor for a target constant current.

Copyright © 2012–2014, Texas Instruments Incorporated

Since not all of the energy stored in the transformer is transferred to the secondary, a transformer efficiency term is included. This efficiency number includes the core and winding losses, leakage inductance ratio, and bias power ratio to rated output power. For a 5-V, 1-A charger example, bias power of 1.5% is a good estimate. An overall transformer efficiency of 0.9 is a good estimate to include 3.5% leakage inductance, 5% core and winding loss, and 1.5% bias power.

$$R_{CS} = \frac{V_{CCR} \times N_{PS}}{2I_{OCC}} \times \eta_{XFMR} \tag{23}$$

The primary transformer inductance can be calculated using the standard energy storage equation for flyback transformers. Primary current, maximum switching frequency and output and transformer power losses are included in the equation below. Initially determine transformer primary current.

Primary current is simply the maximum current sense threshold divided by the current sense resistance.

$$I_{PP(max)} = \frac{V_{CST(max)}}{R_{CS}} \tag{24}$$

$$L_P = \frac{2(V_{OCV} + V_F + V_{OCBC}) \times I_{OCC}}{\eta_{XFMR} \times I_{PP(max)}^2 \times f_{MAX}} \tag{25}$$

The secondary winding to auxiliary winding transformer turns ratio (N_{AS}) is determined by the lowest target operating output voltage in constant-current regulation and the VDD UVLO of the UCC28700. There is additional energy supplied to VDD from the transformer leakage inductance energy which allows a lower turns ratio to be used in many designs.

$$N_{AS} = \frac{V_{DD(off)} + V_{FA}}{V_{OCC} + V_F} \tag{26}$$

9.2.2.8 Standby Power Estimate

Assuming no-load standby power is a critical design parameter, determine estimated no-load power based on target converter maximum switching frequency and output power rating.

The following equation estimates the stand-by power of the converter.

$$P_{SB_CONV} = \frac{P_{OUT} \times f_{MIN}}{\eta_{SB} \times K_{AM}^2 \times f_{MAX}} \tag{27}$$

For a typical USB charger application, the bias power during no-load is approximately 2.5 mW. This is based on 25-V VDD and 100-µA bias current. The output preload resistor can be estimated by V_{OCV} and the difference in the converter stand-by power and the bias power. The equation for output preload resistance accounts for bias power estimated at 2.5 mW.

$$R_{PL} = \frac{V_{OCV}^2}{P_{SB_CONV} - 2.5\,mW} \tag{28}$$

Typical start-up resistance values for R_{STR} range from 13 MΩ to 20 MΩ to achieve 1-s start-up time. The capacitor bulk voltage for the loss estimation is the highest voltage for the stand-by power measurement, typically 325 V_{DC}.

$$P_{RSTR} = \frac{V_{BLK}^2}{R_{STR}} \tag{29}$$

For the total stand-by power estimation add an estimated 2.5 mW for snubber loss to the start-up resistance and converter stand-by power loss.

$$P_{SB} = P_{SB_CONV} + P_{RSTR} + 2.5\,mW \tag{30}$$

9.2.3 Application Curves

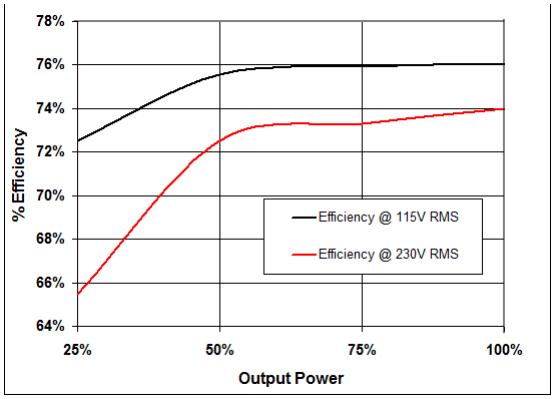

Figure 20. Efficiency

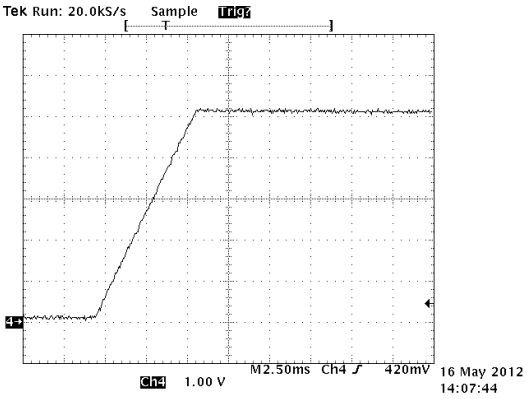

Figure 21. Output at Startup at 115-V RMS (No Load)

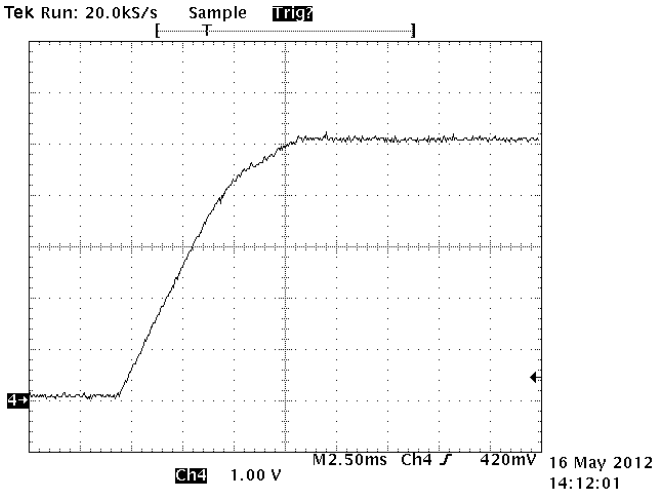

Figure 22. Output at Startup at 115-V RMS (5-Ω Load)

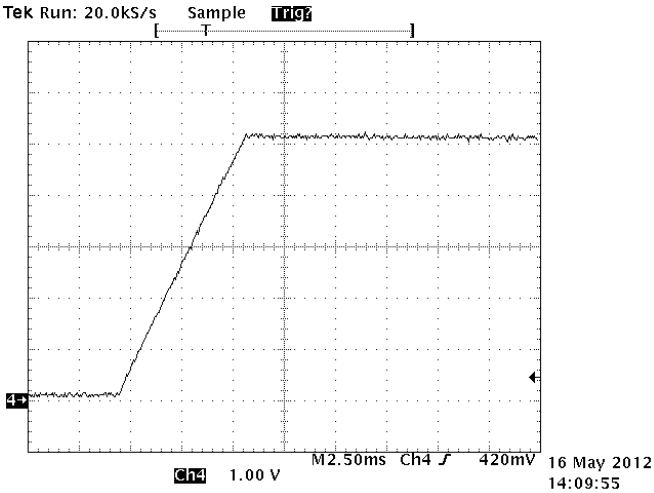

Figure 23. Output at Startup at 230-V RMS (No Load)

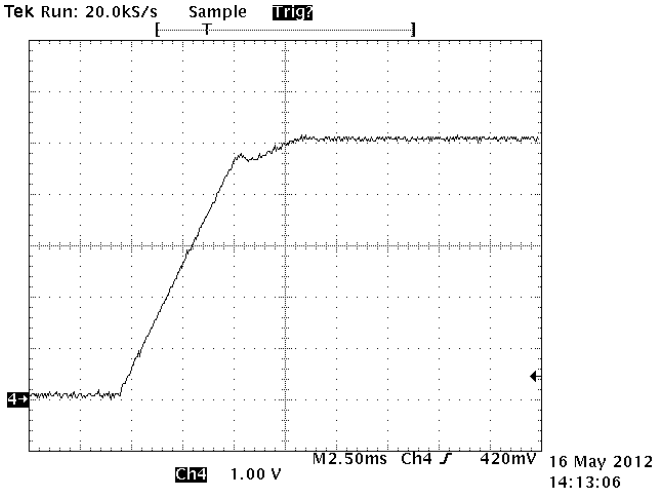

Figure 24. Output at Startup at 230-V RMS (5-Ω Load)

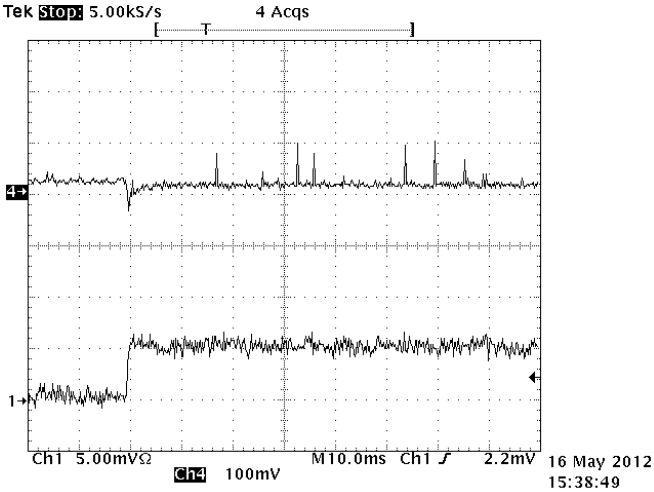

CH1 = I_O, CH4 = V_O With a 5-V Offset

Figure 25. Load Transients: (0.1-A to 0.6-A Load Step)

Copyright © 2012–2014, Texas Instruments Incorporated

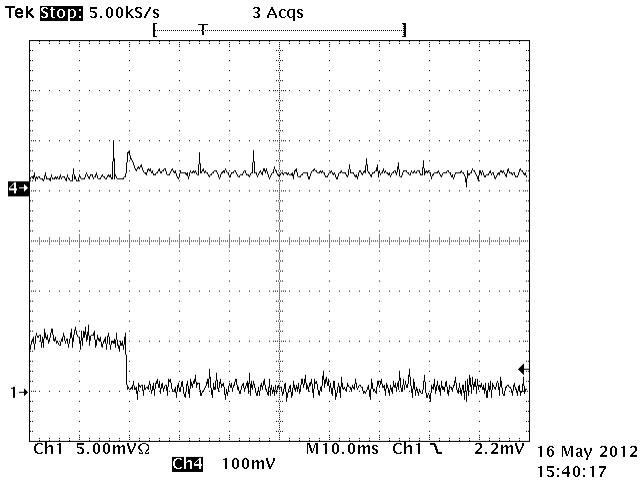

CH1 = I_O, CH4 = V_O With a 5-V Offset

Figure 26. Load Transients: (0.6-A to 0.1-A Load Step)

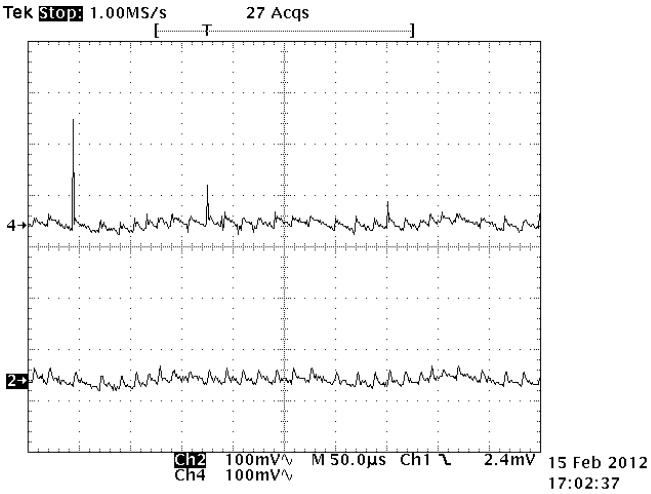

CH4 = V_O, Output voltage at EVM output

CH2 = V_O, Output voltage measured at the end of the 3M of cable in parallel with a 1-uF capacitor. The output voltage has less than 50 mV of output ripple at the end of the cable.

Figure 27. Output Ripple Voltage at Full Load

10 Power Supply Recommendations

The UCC2870X family is intended for AC/DC adapters and chargers with input voltage range of 85 $V_{AC(rms)}$ to 265 $V_{AC(rms)}$ using Flyback topology. It can be used in other applications and converter topologies with different input voltages. Be sure that all voltages and currents are within the recommended operating conditions and absolute maximum ratings of the device.

To maintain output current regulation over the entire input voltage range, design the converter to operate close to f_{MAX} when in full-load conditions.

To improve thermal performance increase the copper area connected to GND pins.

11 Layout

11.1 Layout Guidelines

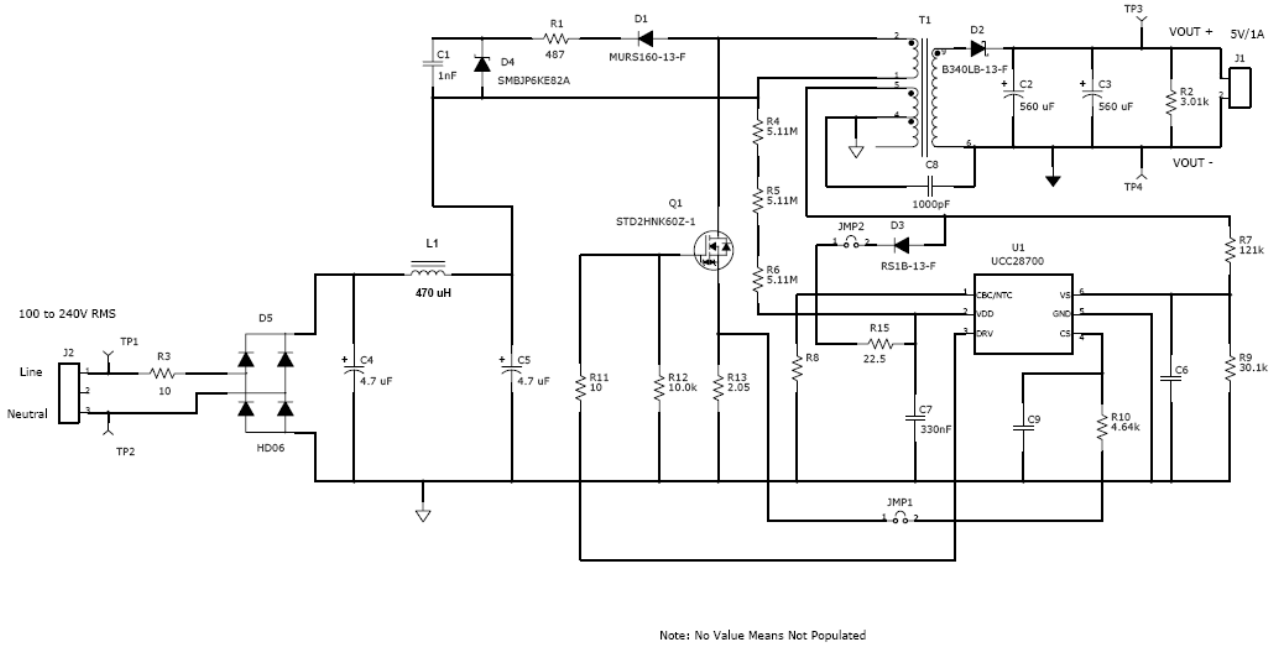

Figure 28. 5W USB Adapter Schematic

- High frequency bypass Capacitor C7 should be placed arcos Pin 2 and 5 as close as you can get it to the pins.
- Resistor R15 and C7 form a low pass filter and the connection of R15 and C7 should be as close to the VDD pin as possible.
- C9 should be put as close to CS pin and R10 as possible. This forms a low pass filter with R10.
- The connection for C9 and R10 should be as close to the CS pin as possible.
- Please note that C9 may not be required in all designs. However, it is wise to put a place holder for it in your design.
- The VS pin controls the output voltage through the transformer turns ratio and the voltage divider of R7 and R9. Note the trace with between the R7, R9 and VS pin should be; as short as; possible to reduce/eliminate possible EMI coupling.
- Note the IC ground and power ground should meet at the bulk capacitor's (C4 and C5) return. Tri to ensure that high frequency/high current from the power stage does not go through the signal ground.
  - The high frequency/high current path that you need to be cautious of on the primary is C4, C5 +, T1 (P1,P2), Q1d, Q1s, R13 to the return of C4 and C5.

Copyright © 2012–2014, Texas Instruments Incorporated

Layout Guidelines (continued)

- Try to keep all high current loops as short as possible.
- Keep all high current/high frequency traces away from or perpendicular to other traces in the design.
- Traces on the voltage clamp formed by D1, R1, D4 and C4 as short as possible.
- C4 return needs to be as close to the bulk capacitor supply as possible. This reduces the magnitude of dv/dt caused by large di/dt.
- Avoid mounting semiconductors under magnetics.

11.2 Layout Example

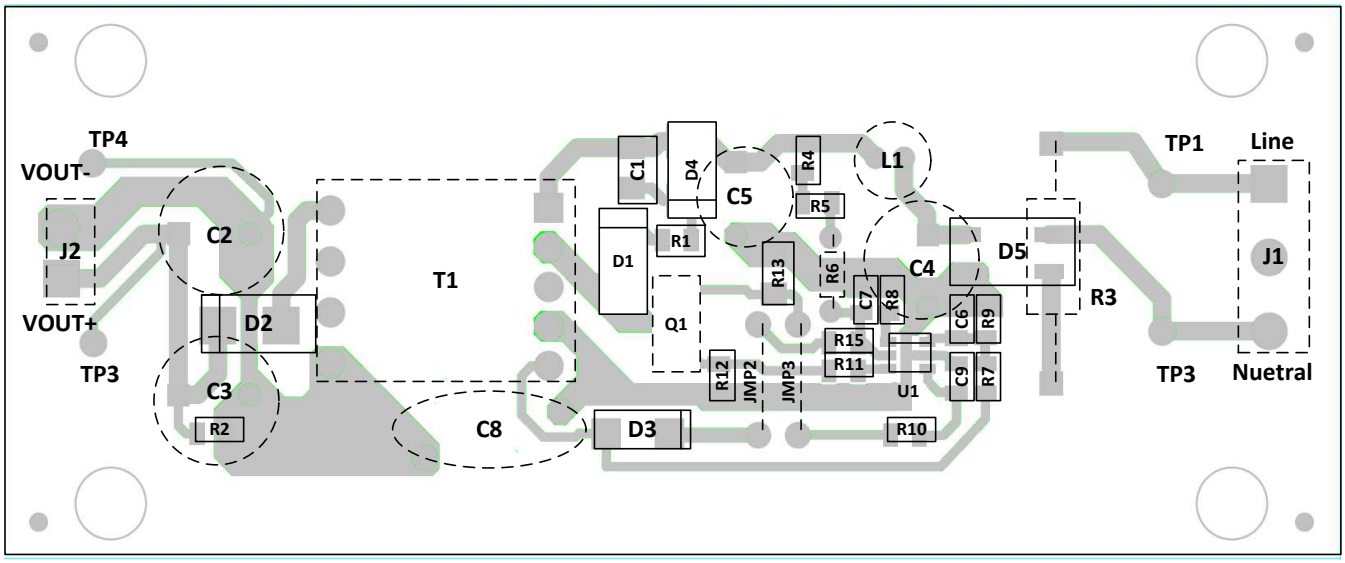

Figure 29. Layout Example

12 Device and Documentation Support

12.1 Device Support

12.1.1 Device Nomenclature

12.1.1.1 Capacitance Terms in Farads

C_{BULK} total input capacitance of C_{B1} and C_{B2}.

C_{DD} minimum required capacitance on the VDD pin.

C_{OUT} minimum output capacitance required.

12.1.1.2 Duty Cycle Terms

D_{MAGCC} secondary diode conduction duty cycle in CC, 0.425.

D_{MAX} MOSFET on-time duty cycle.

12.1.1.3 Frequency Terms in Hertz

f_{LINE} minimum line frequency.

f_{MAX} target full-load maximum switching frequency of the converter.

f_{MIN} minimum switching frequency of the converter, add 15% margin over the $f_{SW(min)}$ limit of the device.

$f_{SW(min)}$ minimum switching frequency (see the *Electrical Characteristics* table)

Device Support (continued)

12.1.1.4 Current Terms in Amperes

I_{OCC} converter output constant-current target.

$I_{PP(max)}$ maximum transformer primary current.

I_{START} start-up bias supply current (see the *Electrical Characteristics* table).

I_{TRAN} required positive load-step current.

$I_{VSL(run)}$ VS pin run current (see the *Electrical Characteristics* table).

12.1.1.5 Current and Voltage Scaling Terms

K_{AM} maximum-to-minimum peak primary current ratio (see the *Electrical Characteristics* table).

K_{LC} current-scaling constant (see the *Electrical Characteristics* table).

12.1.1.6 Transformer Terms

L_P transformer primary inductance.

N_{AS} transformer auxiliary-to-secondary turns ratio.

N_{PA} transformer primary-to-auxiliary turns ratio.

N_{PS} transformer primary-to-secondary turns ratio.

12.1.1.7 Power Terms in Watts

P_{IN} converter maximum input power.

P_{OUT} full-load output power of the converter.

P_{RSTR} VDD start-up resistor power dissipation.

P_{SB} total stand-by power.

P_{SB_CONV} P_{SB} minus start-up resistor and snubber losses.

12.1.1.8 Resistance Terms in Ω

R_{CS} primary current programming resistance

R_{ESR} total ESR of the output capacitor(s).

R_{PL} preload resistance on the output of the converter.

R_{S1} high-side VS pin resistance.

R_{S2} low-side VS pin resistance.

R_{STR} maximum start-up resistance to achieve the turn-on time target.

R_{STR} V_{DD} start-up resistance.

12.1.1.9 Timing Terms in Seconds

T_D current-sense delay including MOSFET turn-off delay; add 50 ns to MOSFET delay.

$T_{DMAG(min)}$ minimum secondary rectifier conduction time.

$T_{ON(min)}$ minimum MOSFET on time.

T_R resonant frequency during the DCM (discontinuous conduction mode) time.

T_{STR} converter start-up time requirement.

12.1.1.10 Voltage Terms in Volts

V_{BLK} highest bulk capacitor voltage for stand-by power measurement.

Copyright © 2012–2014, Texas Instruments Incorporated

Device Support (continued)

$V_{BULK(min)}$ minimum voltage on C_{B1} and C_{B2} at full power.

V_{OCBC} target cable compensation voltage at the output terminals.

$V_{CBC(max)}$ maximum voltage at the CBC pin at the maximum converter output current (see the *Electrical Characteristics* table).

V_{CCR} constant-current regulating voltage (see the *Electrical Characteristics* table).

$V_{CST(max)}$ CS pin maximum current-sense threshold (see the *Electrical Characteristics* table).

$V_{CST(min)}$ CS pin minimum current-sense threshold (see the *Electrical Characteristics* table).

$V_{DD(off)}$ UVLO turn-off voltage (see the *Electrical Characteristics* table).

$V_{DD(on)}$ UVLO turn-on voltage (see the *Electrical Characteristics* table).

$V_{O\Delta}$ output voltage drop allowed during the load-step transient.

V_{DSPK} peak MOSFET drain-to-source voltage at high line.

V_F secondary rectifier forward voltage drop at near-zero current.

V_{FA} auxiliary rectifier forward voltage drop.

V_{LK} estimated leakage inductance energy reset voltage.

V_{OCV} regulated output voltage of the converter.

V_{OCC} target lowest converter output voltage in constant-current regulation.

V_{REV} peak reverse voltage on the secondary rectifier.

V_{RIPPLE} output peak-to-peak ripple voltage at full-load.

V_{VSR} CV regulating level at the VS input (see the *Electrical Characteristics* table).

12.1.1.11 AC Voltage Terms in V_{RMS}

$V_{IN(max)}$ maximum input voltage to the converter.

$V_{IN(min)}$ minimum input voltage to the converter.

$V_{IN(run)}$ converter input start-up (run) voltage.

12.1.1.12 Efficiency Terms

η_{SB} estimated efficiency of the converter at no-load condition, not including start-up resistance or bias losses. For a 5-V USB charger application, 60% to 65% is a good initial estimate.

η converter overall efficiency.

η_{XFMR} transformer primary-to-secondary power transfer efficiency.

12.2 Documentation Support

12.2.1 Related Documentation

For related documentation see the following:

Using the UCC28700EVM-068, Evaluation Module, SLUU968

12.2.2 Related Links

The table below lists quick access links. Categories include technical documents, support and community resources, tools and software, and quick access to sample or buy.

Documentation Support (continued)

Table 2. Related Links

PARTS	PRODUCT FOLDER	SAMPLE & BUY	TECHNICAL DOCUMENTS	TOOLS & SOFTWARE	SUPPORT & COMMUNITY
UCC28700	Click here	Click here	Click here	Click here	Click here
UCC28701	Click here	Click here	Click here	Click here	Click here
UCC28702	Click here	Click here	Click here	Click here	Click here
UCC28703	Click here	Click here	Click here	Click here	Click here

12.3 Trademarks

All trademarks are the property of their respective owners.

12.4 Electrostatic Discharge Caution

These devices have limited built-in ESD protection. The leads should be shorted together or the device placed in conductive foam during storage or handling to prevent electrostatic damage to the MOS gates.

12.5 Glossary

SLYZ022 — *TI Glossary*.

This glossary lists and explains terms, acronyms, and definitions.

13 Mechanical, Packaging, and Orderable Information

The following pages include mechanical, packaging, and orderable information. This information is the most current data available for the designated devices. This data is subject to change without notice and revision of this document. For browser-based versions of this data sheet, refer to the left-hand navigation.

Copyright © 2012–2014, Texas Instruments Incorporated

PACKAGING INFORMATION

Orderable part number	Status (1)	Material type (2)	Package | Pins	Package qty | Carrier	RoHS (3)	Lead finish/ Ball material (4)	MSL rating/ Peak reflow (5)	Op temp (°C)	Part marking (6)
UCC28700DBVR	Active	Production	SOT-23 (DBV) | 6	3000 | LARGE T&R	Yes	NIPDAU	Level-1-260C-UNLIM	-20 to 125	U700
UCC28700DBVR.B	Active	Production	SOT-23 (DBV) | 6	3000 | LARGE T&R	Yes	NIPDAU	Level-1-260C-UNLIM	-20 to 125	U700
UCC28700DBVRG4	Active	Production	SOT-23 (DBV) | 6	3000 | LARGE T&R	Yes	NIPDAU	Level-1-260C-UNLIM	-20 to 125	U700
UCC28700DBVRG4.B	Active	Production	SOT-23 (DBV) | 6	3000 | LARGE T&R	Yes	NIPDAU	Level-1-260C-UNLIM	-20 to 125	U700
UCC28700DBVT	Active	Production	SOT-23 (DBV) | 6	250 | SMALL T&R	Yes	NIPDAU	Level-1-260C-UNLIM	-20 to 125	U700
UCC28700DBVT.B	Active	Production	SOT-23 (DBV) | 6	250 | SMALL T&R	Yes	NIPDAU	Level-1-260C-UNLIM	-20 to 125	U700
UCC28701DBVR	Active	Production	SOT-23 (DBV) | 6	3000 | LARGE T&R	Yes	NIPDAU	Level-1-260C-UNLIM	-20 to 125	U701
UCC28701DBVR.B	Active	Production	SOT-23 (DBV) | 6	3000 | LARGE T&R	Yes	NIPDAU	Level-1-260C-UNLIM	-20 to 125	U701
UCC28701DBVT	Active	Production	SOT-23 (DBV) | 6	250 | SMALL T&R	Yes	NIPDAU	Level-1-260C-UNLIM	-20 to 125	U701
UCC28701DBVT.B	Active	Production	SOT-23 (DBV) | 6	250 | SMALL T&R	Yes	NIPDAU	Level-1-260C-UNLIM	-20 to 125	U701
UCC28702DBVR	Active	Production	SOT-23 (DBV) | 6	3000 | LARGE T&R	Yes	NIPDAU	Level-1-260C-UNLIM	-20 to 125	U702
UCC28702DBVR.B	Active	Production	SOT-23 (DBV) | 6	3000 | LARGE T&R	Yes	NIPDAU	Level-1-260C-UNLIM	-20 to 125	U702
UCC28702DBVT	Active	Production	SOT-23 (DBV) | 6	250 | SMALL T&R	Yes	NIPDAU	Level-1-260C-UNLIM	-20 to 125	U702
UCC28702DBVT.B	Active	Production	SOT-23 (DBV) | 6	250 | SMALL T&R	Yes	NIPDAU	Level-1-260C-UNLIM	-20 to 125	U702
UCC28703DBVR	Active	Production	SOT-23 (DBV) | 6	3000 | LARGE T&R	Yes	NIPDAU	Level-1-260C-UNLIM	-20 to 125	U703
UCC28703DBVR.B	Active	Production	SOT-23 (DBV) | 6	3000 | LARGE T&R	Yes	NIPDAU	Level-1-260C-UNLIM	-20 to 125	U703
UCC28703DBVT	Active	Production	SOT-23 (DBV) | 6	250 | SMALL T&R	Yes	NIPDAU	Level-1-260C-UNLIM	-20 to 125	U703
UCC28703DBVT.B	Active	Production	SOT-23 (DBV) | 6	250 | SMALL T&R	Yes	NIPDAU	Level-1-260C-UNLIM	-20 to 125	U703

(1) **Status:** For more details on status, see our product life cycle.

(2) **Material type:** When designated, preproduction parts are prototypes/experimental devices, and are not yet approved or released for full production. Testing and final process, including without limitation quality assurance, reliability performance testing, and/or process qualification, may not yet be complete, and this item is subject to further changes or possible discontinuation. If available for ordering, purchases will be subject to an additional waiver at checkout, and are intended for early internal evaluation purposes only. These items are sold without warranties of any kind.

(3) **RoHS values:** Yes, No, RoHS Exempt. See the TI RoHS Statement for additional information and value definition.

(4) **Lead finish/Ball material:** Parts may have multiple material finish options. Finish options are separated by a vertical ruled line. Lead finish/Ball material values may wrap to two lines if the finish value exceeds the maximum column width.

(5) **MSL rating/Peak reflow:** The moisture sensitivity level ratings and peak solder (reflow) temperatures. In the event that a part has multiple moisture sensitivity ratings, only the lowest level per JEDEC standards is shown. Refer to the shipping label for the actual reflow temperature that will be used to mount the part to the printed circuit board.

(6) **Part marking:** There may be an additional marking, which relates to the logo, the lot trace code information, or the environmental category of the part.

Multiple part markings will be inside parentheses. Only one part marking contained in parentheses and separated by a "~" will appear on a part. If a line is indented then it is a continuation of the previous line and the two combined represent the entire part marking for that device.

Important Information and Disclaimer: The information provided on this page represents TI's knowledge and belief as of the date that it is provided. TI bases its knowledge and belief on information provided by third parties, and makes no representation or warranty as to the accuracy of such information. Efforts are underway to better integrate information from third parties. TI has taken and continues to take reasonable steps to provide representative and accurate information but may not have conducted destructive testing or chemical analysis on incoming materials and chemicals. TI and TI suppliers consider certain information to be proprietary, and thus CAS numbers and other limited information may not be available for release.

In no event shall TI's liability arising out of such information exceed the total purchase price of the TI part(s) at issue in this document sold by TI to Customer on an annual basis.

OTHER QUALIFIED VERSIONS OF UCC28700 :

- Automotive : UCC28700-Q1

NOTE: Qualified Version Definitions:

- Automotive - Q100 devices qualified for high-reliability automotive applications targeting zero defects

TAPE AND REEL INFORMATION

REEL DIMENSIONS

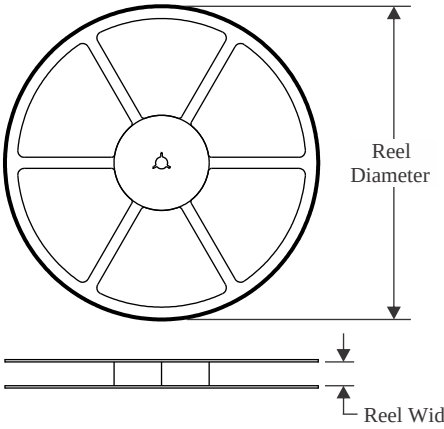

TAPE DIMENSIONS

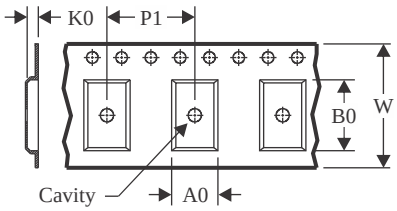

A0	Dimension designed to accommodate the component width
B0	Dimension designed to accommodate the component length
K0	Dimension designed to accommodate the component thickness
W	Overall width of the carrier tape
P1	Pitch between successive cavity centers

QUADRANT ASSIGNMENTS FOR PIN 1 ORIENTATION IN TAPE

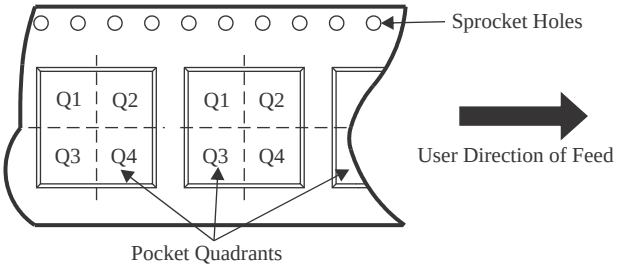

*All dimensions are nominal

Device	Package Type	Package Drawing	Pins	SPQ	Reel Diameter (mm)	Reel Width W1 (mm)	A0 (mm)	B0 (mm)	K0 (mm)	P1 (mm)	W (mm)	Pin1 Quadrant
UCC28700DBVR	SOT-23	DBV	6	3000	178.0	9.0	3.23	3.17	1.37	4.0	8.0	Q3
UCC28700DBVRG4	SOT-23	DBV	6	3000	178.0	9.0	3.23	3.17	1.37	4.0	8.0	Q3
UCC28700DBVT	SOT-23	DBV	6	250	178.0	9.0	3.23	3.17	1.37	4.0	8.0	Q3
UCC28701DBVR	SOT-23	DBV	6	3000	178.0	9.0	3.23	3.17	1.37	4.0	8.0	Q3
UCC28701DBVT	SOT-23	DBV	6	250	178.0	9.0	3.23	3.17	1.37	4.0	8.0	Q3
UCC28702DBVR	SOT-23	DBV	6	3000	178.0	9.0	3.23	3.17	1.37	4.0	8.0	Q3
UCC28702DBVT	SOT-23	DBV	6	250	178.0	9.0	3.23	3.17	1.37	4.0	8.0	Q3
UCC28703DBVR	SOT-23	DBV	6	3000	178.0	9.0	3.23	3.17	1.37	4.0	8.0	Q3
UCC28703DBVT	SOT-23	DBV	6	250	178.0	9.0	3.23	3.17	1.37	4.0	8.0	Q3

TAPE AND REEL BOX DIMENSIONS

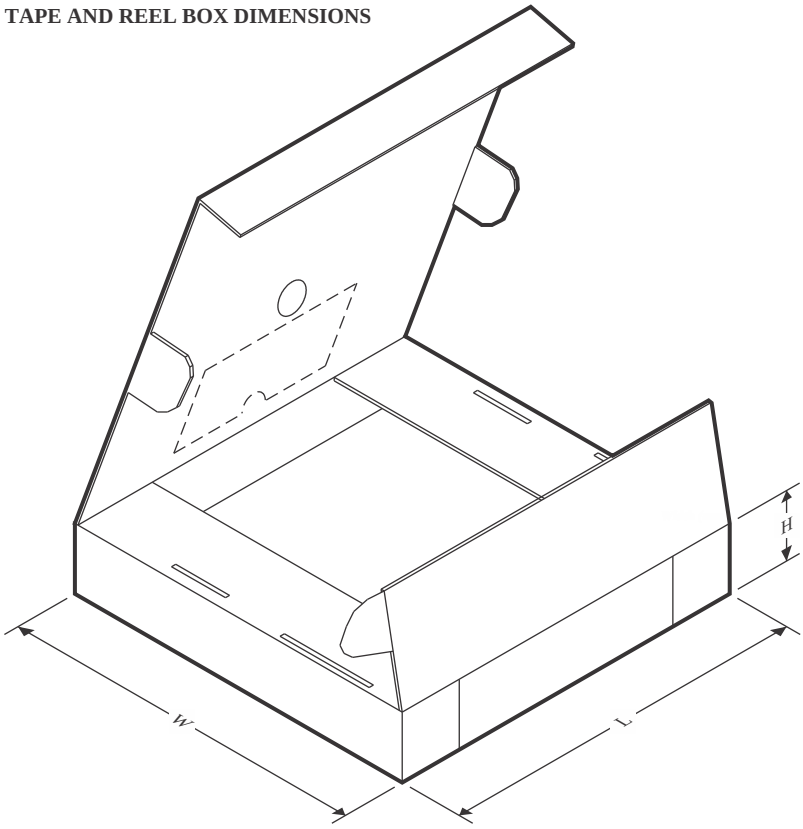

*All dimensions are nominal

Device	Package Type	Package Drawing	Pins	SPQ	Length (mm)	Width (mm)	Height (mm)
UCC28700DBVR	SOT-23	DBV	6	3000	180.0	180.0	18.0
UCC28700DBVRG4	SOT-23	DBV	6	3000	180.0	180.0	18.0
UCC28700DBVT	SOT-23	DBV	6	250	180.0	180.0	18.0
UCC28701DBVR	SOT-23	DBV	6	3000	180.0	180.0	18.0
UCC28701DBVT	SOT-23	DBV	6	250	180.0	180.0	18.0
UCC28702DBVR	SOT-23	DBV	6	3000	180.0	180.0	18.0
UCC28702DBVT	SOT-23	DBV	6	250	180.0	180.0	18.0
UCC28703DBVR	SOT-23	DBV	6	3000	180.0	180.0	18.0
UCC28703DBVT	SOT-23	DBV	6	250	180.0	180.0	18.0

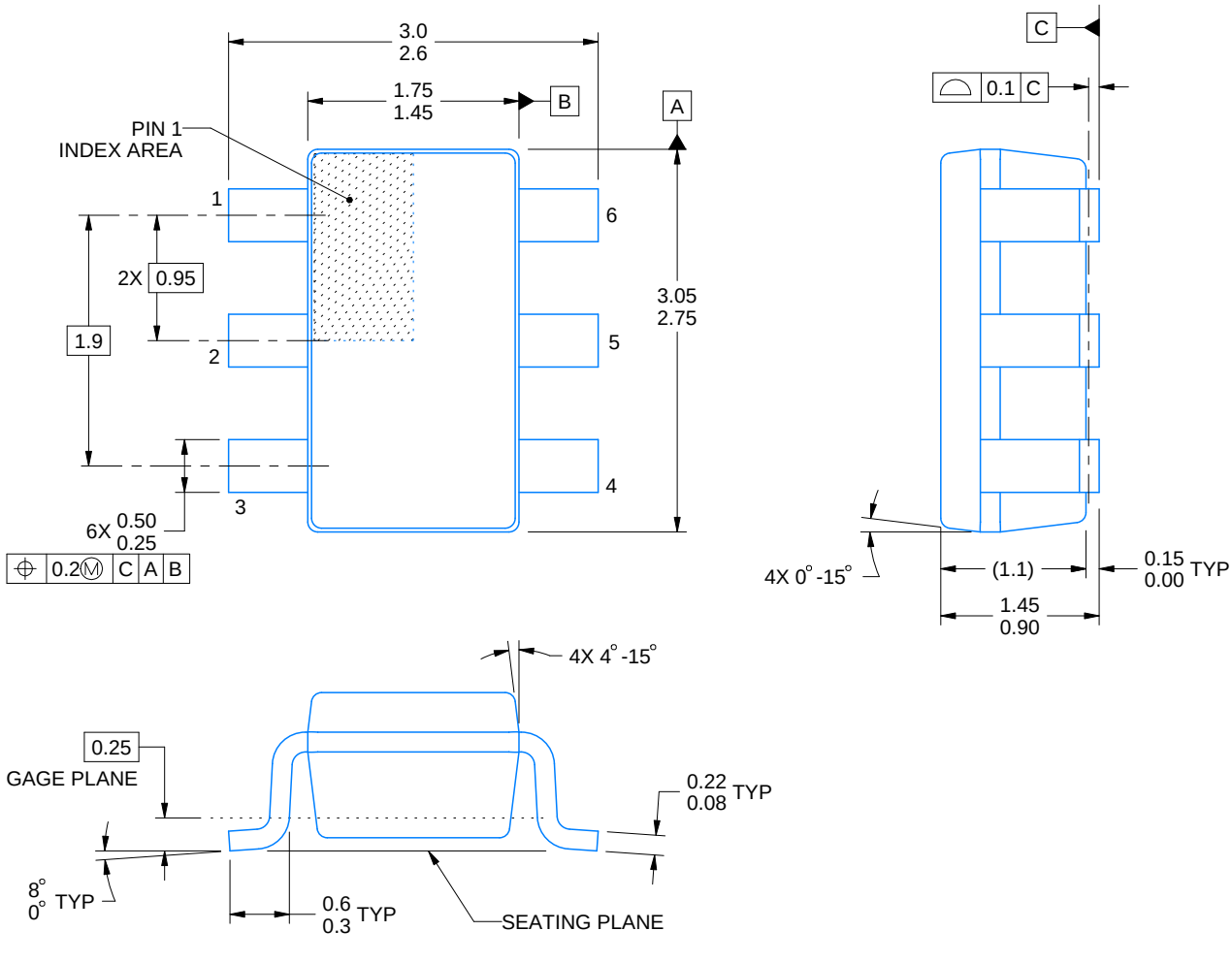

4214840/G 08/2024

NOTES:

1. All linear dimensions are in millimeters. Any dimensions in parenthesis are for reference only. Dimensioning and tolerancing per ASME Y14.5M.
2. This drawing is subject to change without notice.
3. Body dimensions do not include mold flash or protrusion. Mold flash and protrusion shall not exceed 0.25 per side.
4. Leads 1,2,3 may be wider than leads 4,5,6 for package orientation.
5. Refernce JEDEC MO-178.

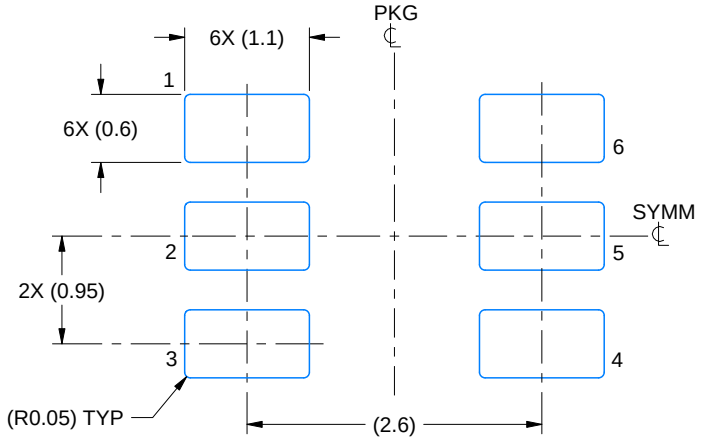

LAND PATTERN EXAMPLE
EXPOSED METAL SHOWN
SCALE:15X

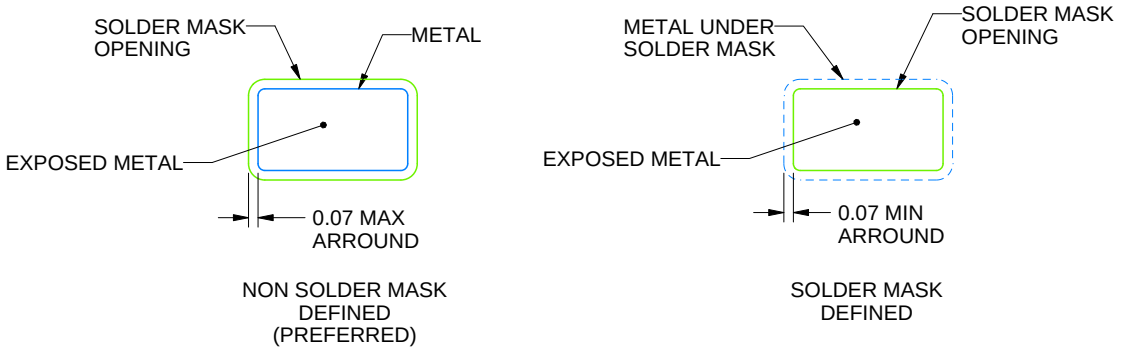

SOLDER MASK DETAILS

4214840/G 08/2024

NOTES: (continued)

6. Publication IPC-7351 may have alternate designs.
7. Solder mask tolerances between and around signal pads can vary based on board fabrication site.

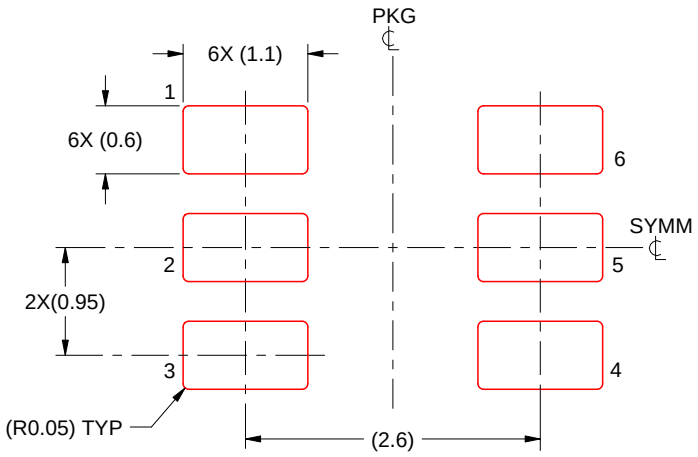

SOLDER PASTE EXAMPLE
BASED ON 0.125 mm THICK STENCIL
SCALE:15X

4214840/G 08/2024

NOTES: (continued)

8. Laser cutting apertures with trapezoidal walls and rounded corners may offer better paste release. IPC-7525 may have alternate design recommendations.
9. Board assembly site may have different recommendations for stencil design.

IMPORTANT NOTICE AND DISCLAIMER

TI PROVIDES TECHNICAL AND RELIABILITY DATA (INCLUDING DATASHEETS), DESIGN RESOURCES (INCLUDING REFERENCE DESIGNS), APPLICATION OR OTHER DESIGN ADVICE, WEB TOOLS, SAFETY INFORMATION, AND OTHER RESOURCES “AS IS” AND WITH ALL FAULTS, AND DISCLAIMS ALL WARRANTIES, EXPRESS AND IMPLIED, INCLUDING WITHOUT LIMITATION ANY IMPLIED WARRANTIES OF MERCHANTABILITY, FITNESS FOR A PARTICULAR PURPOSE OR NON-INFRINGEMENT OF THIRD PARTY INTELLECTUAL PROPERTY RIGHTS.

These resources are intended for skilled developers designing with TI products. You are solely responsible for (1) selecting the appropriate TI products for your application, (2) designing, validating and testing your application, and (3) ensuring your application meets applicable standards, and any other safety, security, regulatory or other requirements.

These resources are subject to change without notice. TI grants you permission to use these resources only for development of an application that uses the TI products described in the resource. Other reproduction and display of these resources is prohibited. No license is granted to any other TI intellectual property right or to any third party intellectual property right. TI disclaims responsibility for, and you fully indemnify TI and its representatives against any claims, damages, costs, losses, and liabilities arising out of your use of these resources.

TI’s products are provided subject to TI’s Terms of Sale, TI’s General Quality Guidelines, or other applicable terms available either on ti.com or provided in conjunction with such TI products. TI’s provision of these resources does not expand or otherwise alter TI’s applicable warranties or warranty disclaimers for TI products. Unless TI explicitly designates a product as custom or customer-specified, TI products are standard, catalog, general purpose devices.

TI objects to and rejects any additional or different terms you may propose.

Copyright © 2025, Texas Instruments Incorporated

Last updated 10/2025