APPROVED: _____

DATE: _____ TITLE: _____

Rev	AWO #	Description	Date	Appr
-		RELEASED	9/22/05	
A		REDRAWN	9/29/09	
B		UPDATED TEMPERATURE RATING	7/18/13	SS
C		UPDATED SPEC.	9/30/16	HR/YC
D		UPDATED SPEC.	2/12/18	SS

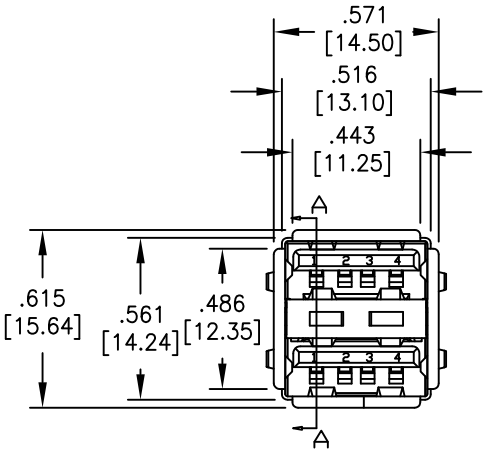

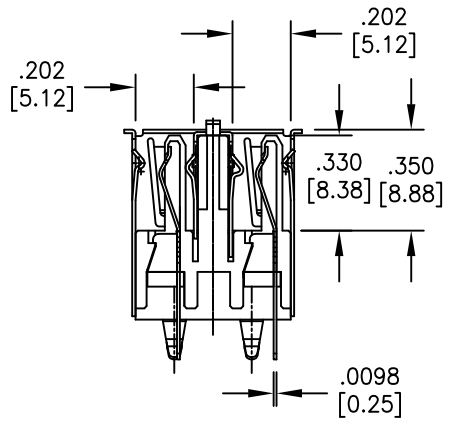

SECTION A–A

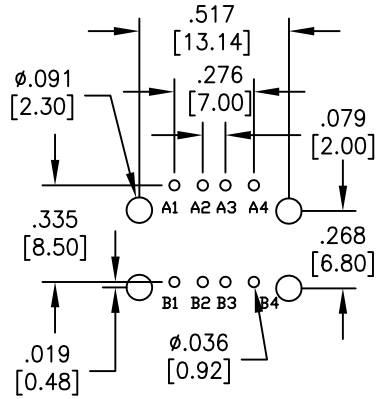

RECOMMENDED PCB LAYOUT

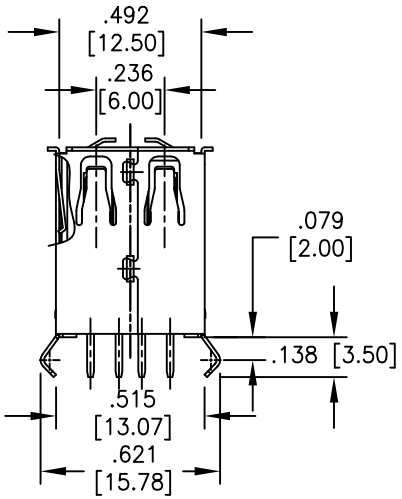

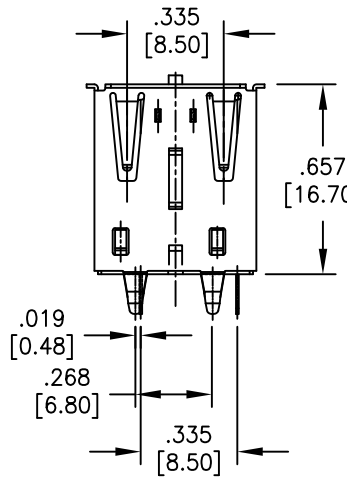

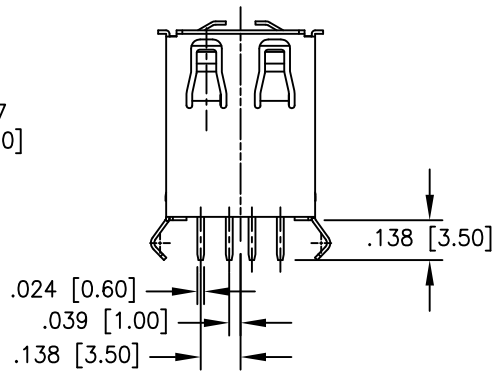

SPECIFICATIONS:

Material:

Insulator: PBT, Glass filled, rated UL 94V–0

Insulator color: Black

Contacts: Phosphor Bronze

Shell: Steel, nickel plated

Plating:

Gold flash over Nickel underplate on contact area,
Tin over Nickel underplate on PCB tails

Electrical:

Voltage rating: 30 V

Current rating: 1.5 Amp @ 250 VAC

Contact resistance: 30 mohms max.

Insulation resistance: 1000 Mohms min.

Dielectric withstanding voltage: 500 VAC for 1 minute

Temperature Rating:

Operating temperature: –55°C to +85°C

Environmental:

Lead free, RoHS compliant.

RoHS COMPLIANT

UNLESS OTHERWISE SPECIFIED
ALL DIMENSIONS ARE INCHES [MM]
TOLERANCES: EXCEPT AS NOTED

INCHES		HOLES	
.X	± .10	Ø.X	±.10
.XX	± .020	Ø.XX	±.015
.XXX	± .015	Ø.XXX	±.010

APPROVALS		DATE
DRAWN	SS	9/22/05
CHECKED		
APPROVED		

ADAM TECH
909 Rahway Avenue, Union, NJ 07083
Phone: 908-687-5000 Fax: 908-687-5710

TITLE: UNIVERSAL SERIAL BUS
DUAL PORT, VERTICAL, PCB

SIZE	PART NO.	REV.
X	USB-A-D-VT	D

REF: S00005C | SCALE: NTS | SHEET 1 OF 1