APPROVED: _____

DATE: _____ TITLE: _____

Rev	AWO #	Description	Date	Appr
-		RELEASED	12/3/04	
A		RE-DESIGNED SHELL AND INSUALTOR	1/06/06	
B		ADDED DIM.	01/23/13	
C		UPDATE SHAPE	9/30/14	AY/YC
D		UPDATE CURRENT RATING	12/22/15	AY/SL
E		UPDATE CURRENT RATING	3/22/16	AY/YC
F		UPDATE OPERATING TEMPERATURE	2/27/17	AY/YC
G		UPDATE DRAWING	9/29/21	WX/MC

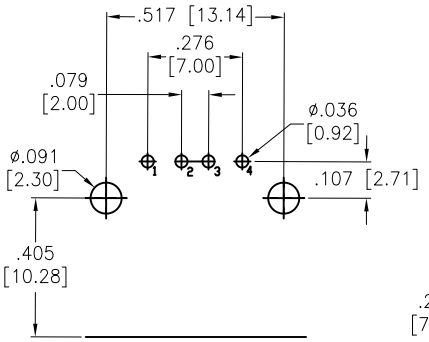

RECOMMENDED PCB LAYOUT

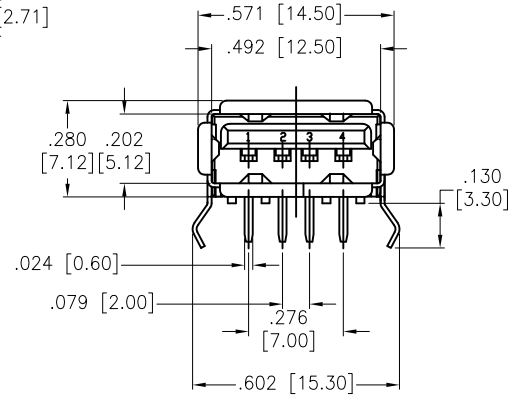

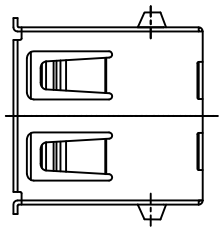

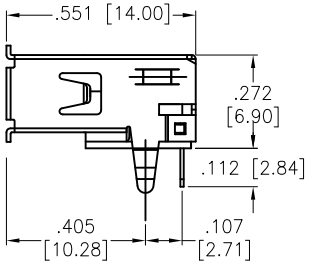

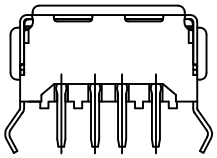

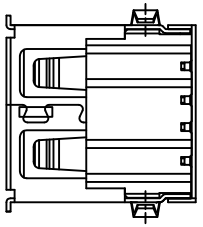

SPECIFICATIONS:

Material:

Insulator: PA66, rated UL 94V-0

Insulator color: Black

Contacts: Brass

Shell: Brass, Nickel plated

Plating:

Gold flash over Nickel underplate on contact area, Tin over Copper underplate on PCB tails

Electrical:

Voltage rating: 30 VAC

Current rating: 1.5 Amp @ 250V AC

Contact resistance: 30 mohms max.

Insulation resistance: 1000 Mohms min.

Dielectric withstanding voltage: 500 VAC

Temperature Rating:

Operating temperature: -40°C to +85°C

Environmental:

Lead free, RoHS compliant. RoHS COMPLIANT

UNLESS OTHERWISE SPECIFIED ALL DIMENSIONS ARE INCHES [MM]. TOLERANCES: EXCEPT AS NOTED

INCHES		HOLES	
.X	± .10	Ø.X	±.10
.XX	± .020	Ø.XX	±.015
.XXX	± .015	Ø.XXX	±.010

DRAWN	SS	10/4/04
CHECKED		
APPROVED		

THIS DRAWING CONTAINS INFORMATION THAT IS PROPRIETARY AND SHOULD NOT BE USED WITHOUT PRIOR WRITTEN PERMISSION FROM ADAM TECH

ADAM TECH
909 Rahway Avenue,
Union, NJ 07083
Phone: 908-687-5000
Fax: 908-687-5710

TITLE: UNIVERSAL SERIAL BUS
SINGLE PORT, RIGHT ANGLE, PCB

SIZE	PART NO.	REV.
X	USB-A-S-RA	G

REF:	SCALE:	SHEET
S00005C	NTS	1 OF 1