APPROVED: _____

DATE: _____ TITLE: _____

Rev	AWO #	Description	Date	Appr
-		RELEASED	12/3/04	
A		REDRAWN	7/02/09	
B		REVISED DIM.	5/30/11	
C		REVISED SPEC.	12/22/11	

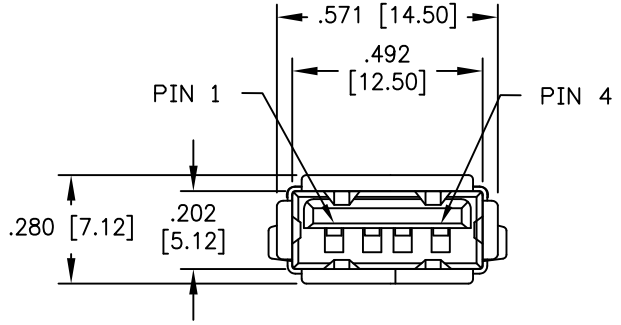

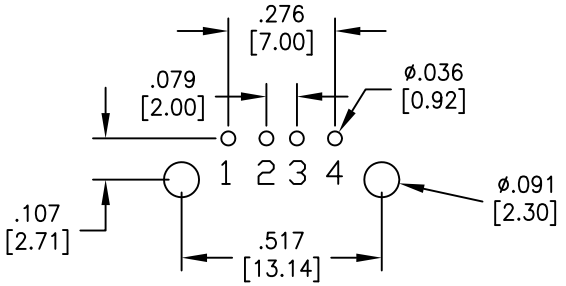

RECOMMENDED PCB LAYOUT
(TOP VIEW)

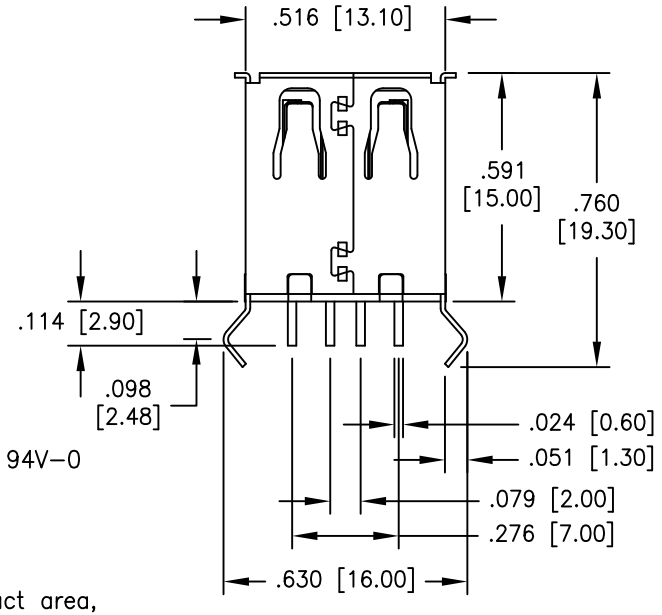

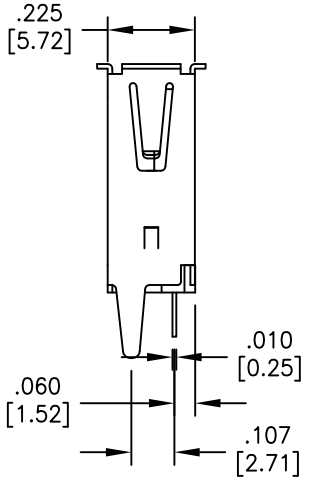

Material:
Insulator: PBT, Glass filled, rated UL 94V–0
Insulator color: Black
Contacts: Brass
Shell: Brass, nickel plated
Plating:
Gold over Nickel underplate on contact area,
Tin over Copper underplate on PCB tails
Electrical:
Operating voltage: 30 VAC max.
Current rating: 1.5 Amp max @ 250V AC.
Contact resistance: 30 mohms max.
Insulation resistance: 1000 Mohms min.
Dielectric withstanding voltage: 500 VAC for 1 minute
Temperature Rating:
Operating temperature: –20°C to +60°C
Environmental:
Lead free, RoHS compliant.

RoHS COMPLIANT

UNLESS OTHERWISE SPECIFIED
ALL DIMENSIONS ARE INCHES [MM]
TOLERANCES: EXCEPT AS NOTED

INCHES		HOLES	
.X	± .10	Ø.X	±.10
.XX	± .020	Ø.XX	±.015
.XXX	± .015	Ø.XXX	±.010

APPROVALS		DATE
DRAWN	SS	10/4/04
CHECKED		
APPROVED		

ADAM TECH
909 Rahway Avenue, Union, NJ 07083
Phone: 908-687-5000 Fax: 908-687-5710

TITLE: UNIVERSAL SERIAL BUS
SINGLE PORT, VERTICAL, PCB

SIZE	PART NO.	REV.
X	USB-A-S-VT	C

REF: S00005C | SCALE: NTS | SHEET 1 OF 1