WL18x7MOD WiLink™ 8 Dual-Band Industrial Module – Wi-Fi®, Bluetooth®, and Bluetooth Low Energy (LE)

1 Features

- General
  - Integrates RF, power amplifiers (PAs), clocks, RF switches, filters, passives, and power management
  - Quick hardware design with TI module collateral and reference designs
  - Operating temperature: –40°C to +85°C industrial temperature grade
  - Small form factor: 13.3mm × 13.4mm × 2mm
  - 100-pin MOC package
  - FCC, IC, ETSI/CE, and TELEC certified with PCB, dipole, chip, and PIFA antennas
- Wi-Fi®
  - WLAN baseband processor and RF transceiver support of IEEE Std 802.11a, 802.11b, 802.11g, and 802.11n
  - 20MHz and 40MHz SISO and 20MHz 2 × 2 MIMO at 2.4GHz for high throughput: 80Mbps (TCP), 100Mbps (UDP)
  - 2.4GHz MRC support for extended range and 5GHz diversity capable
  - Fully calibrated: Production calibration is not required
  - 4-bit SDIO host interface support
  - Wi-Fi direct concurrent operation (multichannel, multirole)
- Bluetooth® and Bluetooth Low Energy: WL1837MOD only
  - Bluetooth 5.1 secure connection compliant and CSA2 support; declaration ID: D052427
  - Host controller interface (HCI) transport for Bluetooth over UART
  - Dedicated audio processor support of SBC encoding + A2DP
  - Dual-mode Bluetooth and Bluetooth Low Energy
  - TI's Bluetooth and Bluetooth Low Energy certified stack
- Key benefits
  - Reduces design overhead
  - Differentiated use cases by configuring WiLink™ 8 simultaneously in two roles (STA and AP) to connect directly with other Wi-Fi devices on different RF channel (Wi-Fi networks)
  - Best-in-class Wi-Fi with high-performance audio and video streaming reference applications with up to 1.4× the range versus one antenna
  - Different provisioning methods for in-home devices' connectivity to Wi-Fi in one step
  - Lowest Wi-Fi power consumption in connected idle (< 800µA)
  - Configurable wake on WLAN filters to only wake up the system
  - Wi-Fi and Bluetooth single antenna coexistence

2 Applications

- Internet of things (IoT)
- Multimedia
- Home electronics
- Home appliances and white goods
- Industrial and home automation
- Smart gateway and metering
- Video conferencing
- Video camera and security

3 Description

The certified WiLink™ 8 module from TI offers a high throughput and extended range along with Wi-Fi® and *Bluetooth*® coexistence (WL1837MOD only) in a power-optimized design. The WL18x7MOD is a Wi-Fi, dual-band, 2.4GHz and 5GHz module solution with two antennas supporting industrial temperature grade. The device is FCC, IC, ETSI/CE, and TELEC certified for AP (with DFS support) and client. TI offers drivers for high-level operating systems, such as Linux® and Android™. Additional drivers, such as WinCE and RTOS, which include QNX, Nucleus, ThreadX, and FreeRTOS, are supported through third parties.

Device Information (1)

PART NUMBER	PACKAGE	BODY SIZE
WL1807MOD	QFM (100)	13.3mm × 13.4mm × 2mm
WL1837MOD	QFM (100)	13.3mm × 13.4mm × 2mm

(1) For more information, see Section 12.

An IMPORTANT NOTICE at the end of this data sheet addresses availability, warranty, changes, use in safety-critical applications, intellectual property matters and other important disclaimers. PRODUCTION DATA.

4 Functional Block Diagram

Model WL18MODGI, Test Grade: 07 Functional Block Diagram

Brand: Texas Instruments

Figure 4-1 shows a functional block diagram of the WL1837MOD variant.

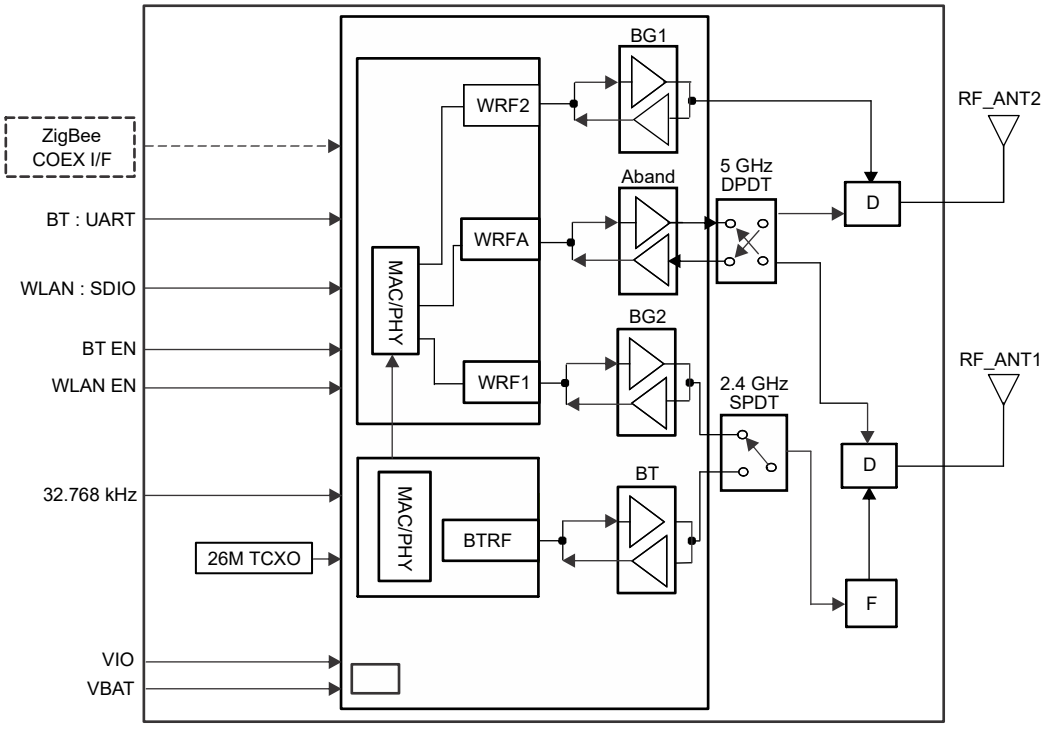

Figure 4-1. WL1837MOD Functional Block Diagram

Note

Dashed lines indicate optional configurations and are not applied by default.

Copyright © 2025 Texas Instruments Incorporated

Table of Contents

1 Features....1
2 Applications....1
3 Description....1
4 Functional Block Diagram....2
5 Device Comparison....4
5.1 Related Products....4
6 Pin Configuration and Functions....5
6.1 Pin Attributes....6
7 Specifications....9
7.1 Absolute Maximum Ratings....9
7.2 ESD Ratings....9
7.3 Recommended Operating Conditions....9
7.4 External Digital Slow Clock Requirements....10
7.5 Thermal Resistance Characteristics for MOC 100-Pin Package....10
7.6 WLAN Performance: 2.4GHz Receiver Characteristics....11
7.7 WLAN Performance: 2.4GHz Transmitter Power....12
7.8 WLAN Performance: 5GHz Receiver Characteristics....13
7.9 WLAN Performance: 5GHz Transmitter Power....14
7.10 WLAN Performance: Currents....15
7.11 Bluetooth Performance: BR, EDR Receiver Characteristics—In-Band Signals....16
7.12 Bluetooth Performance: Transmitter, BR....17
7.13 Bluetooth Performance: Transmitter, EDR....17
7.14 Bluetooth Performance: Modulation, BR....17
7.15 Bluetooth Performance: Modulation, EDR....18
7.16 Bluetooth Low Energy Performance: Receiver Characteristics – In-Band Signals....18
7.17 Bluetooth Low Energy Performance: Transmitter Characteristics....18
7.18 Bluetooth Low Energy Performance: Modulation Characteristics....19
7.19 Bluetooth BR and EDR Dynamic Currents....19
7.20 Bluetooth Low Energy Currents....19
7.21 Timing and Switching Characteristics....20
8 Detailed Description....28
8.1 WLAN Features....29
8.2 Bluetooth Features....29
8.3 Bluetooth Low Energy Features....30
8.4 Device Certification....30
8.5 Module Markings....32
8.6 Test Grades....33
8.7 End Product Labeling....34
8.8 Manual Information to the End User....34
9 Applications, Implementation, and Layout....35
9.1 Application Information....35
10 Device and Documentation Support....41
10.1 Device Support....41
10.2 Support Resources....44
10.3 Trademarks....44
10.4 Electrostatic Discharge Caution....44
10.5 Glossary....44
11 Revision History....45
12 Mechanical, Packaging, and Orderable Information....46
12.1 TI Module Mechanical Outline....46
12.2 Tape and Reel Information....46
12.3 Packaging Information....49

Copyright © 2025 Texas Instruments Incorporated

5 Device Comparison

The TI WiLink 8 module offers two footprint-compatible dual-band 2.4- and 5GHz industrial temperature grade variants providing stand-alone Wi-Fi and Bluetooth combo connectivity. Table 5-1 compares the features of the module variants.

Table 5-1. TI WiLink™ 8 Module Variants

DEVICE	FEATURE				
	WLAN 2.4GHz SISO(1)	WLAN 2.4GHz MIMO(1)	WLAN 2.4GHz MRC(2)	Bluetooth	WLAN 5GHz SISO(1)
WL1837MOD	✓	✓	✓	✓	✓
WL1807MOD	✓	✓	✓		✓

(1) SISO: single input, single output; MIMO: multiple input, multiple output.
(2) MRC: maximum ratio combining; supported at 11 g,n only.

5.1 Related Products

For information about other devices in this family of products or related products, see the following links.

Wireless connectivity overview	Lowest power and longest range across 14 wireless connectivity standards
Sub-1GHz SimpleLink™ wireless MCUs	High performance, long-range wireless, and ultra-low power consumption
Reference Designs for WL1837MOD	Find reference designs leveraging the best in TI technology to solve your system-level challenges.

Copyright © 2025 Texas Instruments Incorporated

6 Pin Configuration and Functions

Figure 6-1 shows the pin assignments for the 100-pin MOC package.

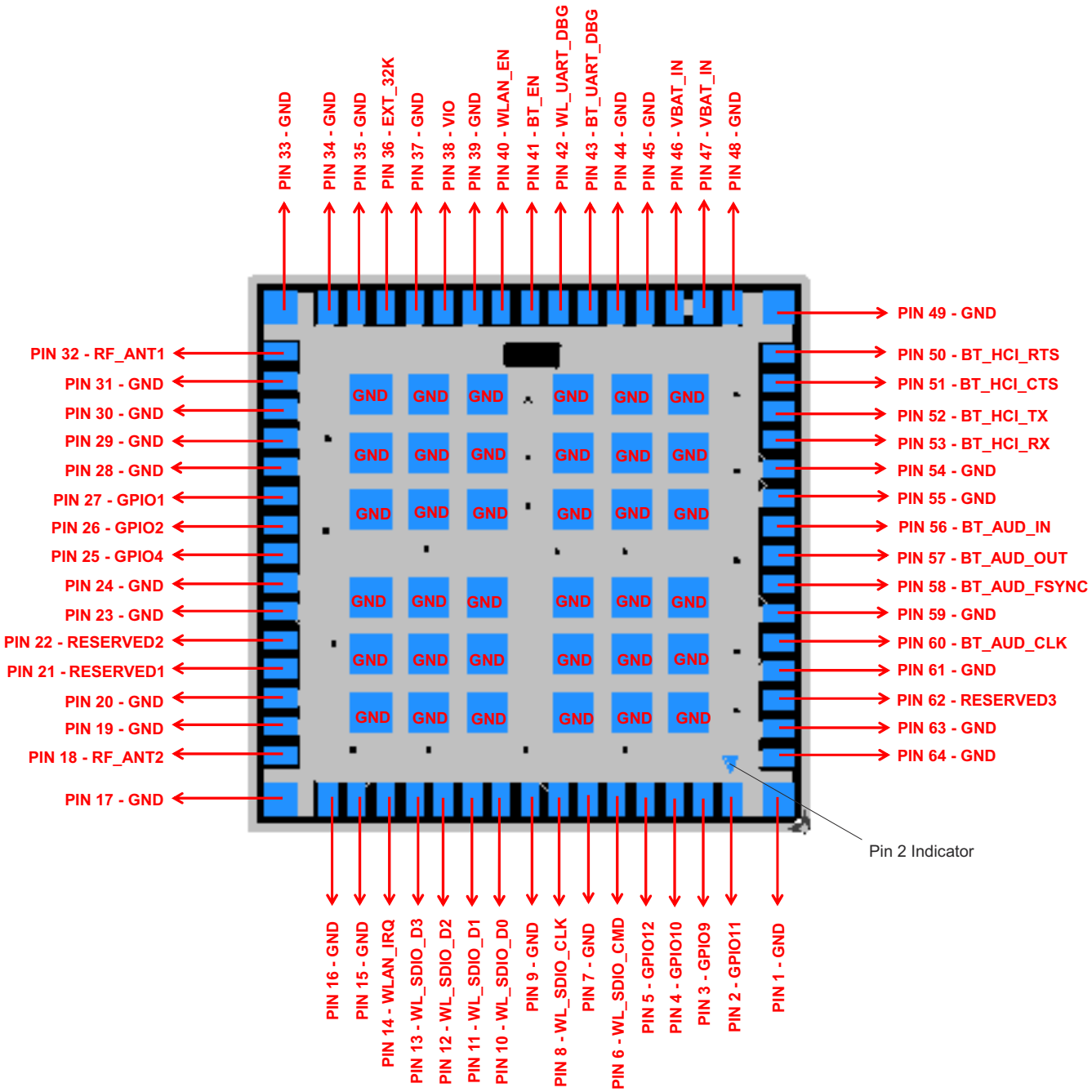

Figure 6-1. 100-Pin MOC Package (Bottom View)

6.1 Pin Attributes

Table 6-1 describes the module pins.

Table 6-1. Pin Attributes

PIN NAME	PIN NO.	TYPE/ DIR	SHUTDOWN STATE(1)	AFTER POWER UP(1)	VOLTAGE LEVEL	CONNECTIVITY(2)		DESCRIPTION(3)
						1807	1837	
Clocks and Reset Signals								
WL_SDIO_CLK_1V8	8	I	Hi-Z	Hi-Z	1.8V	v	v	WLAN SDIO clock. Must be driven by the host.
EXT_32K	36	ANA			–	v	v	Input sleep clock: 32.768 kHz
WLAN_EN	40	I	PD	PD	1.8V	v	v	Mode setting: high = enable
BT_EN	41	I	PD	PD	1.8V	x	v	Mode setting: high = enable. If Bluetooth is not used, connect to ground.
Power-Management Signals								
VIO_IN	38	POW	PD	PD	1.8V	v	v	Connect to 1.8V external VIO
VBAT_IN	46	POW			VBAT	v	v	Power supply input, 2.9 to 4.8V
VBAT_IN	47	POW			VBAT	v	v	Power supply input, 2.9 to 4.8V
TI Reserved								
GPIO11	2	I/O	PD	PD	1.8V	v	v	Reserved for future use. NC if not used.
GPIO9	3	I/O	PD	PD	1.8V	v	v	Reserved for future use. NC if not used.
GPIO10	4	I/O	PU	PU	1.8V	v	v	Reserved for future use. NC if not used.
GPIO12	5	I/O	PU	PU	1.8V	v	v	Reserved for future use. NC if not used.
RESERVED1	21	I	PD	PD	1.8V	x	x	Reserved for future use. NC if not used.
RESERVED2	22	I	PD	PD	1.8V	x	x	Reserved for future use. NC if not used.
GPIO4	25	I/O	PD	PD	1.8V	v	v	Reserved for future use. NC if not used.
RESERVED3	62	O	PD	PD	1.8V	x	x	Reserved for future use. NC if not used. Option: External TCXO.

Copyright © 2025 Texas Instruments Incorporated

Table 6-1. Pin Attributes (continued)

PIN NAME	PIN NO.	TYPE/ DIR	SHUTDOWN STATE(1)	AFTER POWER UP(1)	VOLTAGE LEVEL	CONNECTIVITY(2)		DESCRIPTION(3)
						1807	1837	
WLAN Functional Block: Int Signals								
WL_SDIO_CMD_1V8	6	I/O	Hi-Z	Hi-Z	1.8V	v	v	WLAN SDIO command
WL_SDIO_D0_1V8	10	I/O	Hi-Z	Hi-Z	1.8V	v	v	WLAN SDIO data bit 0
WL_SDIO_D1_1V8	11	I/O	Hi-Z	Hi-Z	1.8V	v	v	WLAN SDIO data bit 1
WL_SDIO_D2_1V8	12	I/O	Hi-Z	Hi-Z	1.8V	v	v	WLAN SDIO data bit 2
WL_SDIO_D3_1V8	13	I/O	Hi-Z	PU	1.8V	v	v	WLAN SDIO data bit 3. Changes state to PU at WL_EN or BT_EN assertion for card detects. Later disabled by software during initialization.
WL_IRQ_1V8	14	O	PD	0	1.8V	v	v	SDIO available, interrupt out. Active high. (For WL_RS232_TX/RX pullup is at power up.) Set to rising edge (active high) on power up. The Wi-Fi interrupt line can be configured by the driver according to the IRQ configuration (polarity/ level/edge).
RF_ANT2	18	ANA			–	v	v	5G ANT diversity TX/RX , 2.4G Secondary antenna MRC/MIMO only
GPIO2	26	I/O	PD	PD	1.8V	v	v	WL_RS232_RX (when WLAN_IRQ = 1 at power up)
GPIO1	27	I/O	PD	PD	1.8V	v	v	WL_RS232_TX (when WLAN_IRQ = 1 at power up)
RF_ANT1	32	ANA			–	v	v	5G main ANT TX/RX, 2.4G WLAN main antenna SISO, Bluetooth
WL_UART_DBG	42	O	PU	PU	1.8V	v	v	Option: WLAN logger
Bluetooth Functional Block: Int Signals								
BT_UART_DBG	43	O	PU	PU	1.8V	x	v	Option: Bluetooth logger
BT_HCI_RTS_1V8	50	O	PU	PU	1.8V	x	v	UART RTS to host. NC if not used.
BT_HCI_CTS_1V8	51	I	PU	PU	1.8V	x	v	UART CTS from host. NC if not used.
BT_HCI_TX_1V8	52	O	PU	PU	1.8V	x	v	UART TX to host. NC if not used.
BT_HCI_RX_1V8	53	I	PU	PU	1.8V	x	v	UART RX from host. NC if not used.
BT_AUD_IN	56	I	PD	PD	1.8V	x	v	Bluetooth PCM/I2S bus. Data in. NC if not used.
BT_AUD_OUT	57	O	PD	PD	1.8V	x	v	Bluetooth PCM/I2S bus. Data out. NC if not used.
BT_AUD_FSYNC	58	I/O	PD	PD	1.8V	x	v	Bluetooth PCM/I2S bus. Frame sync. NC if not used.
BT_AUD_CLK	60	I/O	PD	PD	1.8V	x	v	Bluetooth PCM/I2S bus. NC if not used.

Copyright © 2025 Texas Instruments Incorporated

Table 6-1. Pin Attributes (continued)

PIN NAME	PIN NO.	TYPE/ DIR	SHUTDOWN STATE(1)	AFTER POWER UP(1)	VOLTAGE LEVEL	CONNECTIVITY(2)		DESCRIPTION(3)
						1807	1837	
Ground Pins								
GND	1	GND			–	v	v	v
GND	7	GND			–	v	v	v
GND	9	GND			–	v	v	v
GND	15	GND			–	v	v	v
GND	16	GND			–	v	v	v
GND	17	GND			–	v	v	v
GND	19	GND			–	v	v	v
GND	20	GND			–	v	v	v
GND	23	GND			–	v	v	v
GND	24	GND			–	v	v	v
GND	28	GND			–	v	v	v
GND	29	GND			–	v	v	v
GND	30	GND			–	v	v	v
GND	31	GND			–	v	v	v
GND	33	GND			–	v	v	v
GND	34	GND			–	v	v	v
GND	35	GND			–	v	v	v
GND	37	GND			–	v	v	v
GND	39	GND			–	v	v	v
GND	44	GND			–	v	v	v
GND	45	GND			–	v	v	v
GND	48	GND			–	v	v	v
GND	49	GND			–	v	v	v
GND	54	GND			–	v	v	v
GND	55	GND			–	v	v	v
GND	59	GND			–	v	v	v
GND	61	GND			–	v	v	v
GND	63	GND			–	v	v	v
GND	G1 – G36	GND			–	v	v	v
GND	64	GND			–	v	v	v

(1) PU = pullup; PD = pulldown; Hi-Z = high-impedance
(2) v = connect; x = no connect.
(3) Host must provide PU using a 10kΩ resistor for all non-CLK SDIO signals.

Copyright © 2025 Texas Instruments Incorporated

7 Specifications

All specifications are measured at the module pins using the TI WL1837MODCOM8I evaluation board. All measurements are performed with V_{BAT} = 3.7V, V_{IO} = 1.8V, 25°C for typical values with matched RF antennas, unless otherwise indicated.

Note

For level-shifting I/Os with the TI WL18x7MOD, see the *Level Shifting WL18xx I/Os application report*.

7.1 Absolute Maximum Ratings

over operating free-air temperature range (unless otherwise noted) (1)

	MIN	MAX	UNIT
V_{BAT}		4.8(2)	V
V_{IO}	–0.5	2.1	V
Input voltage to analog pins	–0.5	2.1	V
Input voltage limits (CLK_IN)	–0.5	VDD_IO	V
Input voltage to all other pins	–0.5	(VDD_IO + 0.5 V)	V
Operating ambient temperature	–40	85 (3)	°C
Storage temperature, T_{stg}	–40	85	°C

(1) Stresses beyond those listed under *Absolute Maximum Ratings* may cause permanent damage to the device. These are stress ratings only and functional operation of the device at these or any other conditions beyond those indicated under Operating Conditions is not implied. Exposure to absolute-maximum-rated conditions for extended periods may affect device reliability.
(2) 4.8V cumulative to 2.33 years, including charging dips and peaks
(3) In the WL18xx system, a control mechanism exists to ensure T_j < 125°C. When T_j approaches this threshold, the control mechanism manages the transmitter patterns.

7.2 ESD Ratings

		VALUE	UNIT
$V_{(ESD)}$ Electrostatic discharge	Human body model (HBM), per ANSI/ESDA/JEDEC JS-001(1)	±1000	V
	Charged device model (CDM), per JEDEC specification JESD22-C101(2)	±250	

(1) JEDEC document JEP155 states that 500-V HBM allows safe manufacturing with a standard ESD control process.
(2) JEDEC document JEP157 states that 250-V CDM allows safe manufacturing with a standard ESD control process.

7.3 Recommended Operating Conditions

over operating free-air temperature range (unless otherwise noted)

			MIN	TYP	MAX	UNIT
V_{BAT} (1)	DC supply range for all modes		2.9	3.7	4.8	V
V_{IO}	1.8-V I/O ring power supply voltage		1.62	1.8	1.95	V
V_{IH}	I/O high-level input voltage		0.65 × VDD_IO		VDD_IO	V
V_{IL}	I/O low-level input voltage		0		0.35 × VDD_IO	V
V_{IH_EN}	Enable inputs high-level input voltage		1.365		VDD_IO	V
V_{IL_EN}	Enable inputs low-level input voltage		0		0.4	V
V_{OH}	High-level output voltage	At 4 mA	VDD_IO –0.45		VDD_IO	V
V_{OL}	Low-level output voltage	At 4 mA	0		0.45	V
T_r,T_f	Input transitions time T_r,T_f from 10% to 90% (digital I/O)(2)		1		10	ns
T_r	Output rise time from 10% to 90% (digital pins)(2)	C_L < 25 pF			5.3	ns
T_f	Output fall time from 10% to 90% (digital pins)(2)	C_L < 25 pF			4.9	ns
	Ambient operating temperature		–40		85	°C

Copyright © 2025 Texas Instruments Incorporated

7.3 Recommended Operating Conditions (continued)

over operating free-air temperature range (unless otherwise noted)

		MIN	TYP	MAX	UNIT
Maximum power dissipation	WLAN operation			2.8	W
	Bluetooth operation			0.2	

(1) 4.8 V is applicable only for 2.33 years (30% of the time). Otherwise, maximum V_{BAT} must not exceed 4.3 V.
(2) Applies to all digital lines except SDIO, UART, I2C, PCM and slow clock lines.

7.4 External Digital Slow Clock Requirements

The supported digital slow clock is 32.768kHz digital (square wave). All core functions share a single input.

		CONDITION	MIN	TYP	MAX	UNIT
	Input slow clock frequency			32768		Hz
	Input slow clock accuracy (initial, temperature, and aging)	WLAN, Bluetooth			±250	ppm
T_r, T_f	Input transition time (10% to 90%)				200	ns
	Frequency input duty cycle		15%	50%	85%	
V_{IH}, V_{IL}	Input voltage limits	Square wave, DC coupled	0.65 × VDD_IO		VDD_IO	V_{peak}
			0		0.35 x VDD_IO	
	Input impedance		1			MΩ
	Input capacitance				5	pF

7.5 Thermal Resistance Characteristics for MOC 100-Pin Package

THERMAL METRICS(1)		(°C/W)(2)
θ_{JA}	Junction to free air(3)	16.6
θ_{JB}	Junction to board	6.06
θ_{JC}	Junction to case(4)	5.13

(1) For more information about traditional and new thermal metrics, see the *Semiconductor and IC Package Thermal Metrics Application Report*.
(2) These values are based on a JEDEC-defined 2S2P system (with the exception of the Theta JC [$R_{\theta JC}$] value, which is based on a JEDEC-defined 1S0P system) and will change based on environment as well as application. For more information, see these EIA/JEDEC standards:

- JESD51-2, Integrated Circuits Thermal Test Method Environmental Conditions - Natural Convection (Still Air)
- JESD51-3, Low Effective Thermal Conductivity Test Board for Leaded Surface Mount Packages
- JESD51-7, High Effective Thermal Conductivity Test Board for Leaded Surface Mount Packages
- JESD51-9, Test Boards for Area Array Surface Mount Package Thermal Measurements

Power dissipation of 2W and an ambient temperature of 70°C is assumed.

(3) According to the JEDEC EIA/JESD 51 document
(4) Modeled using the JEDEC 2s2p thermal test board with 36 thermal vias

Copyright © 2025 Texas Instruments Incorporated

7.6 WLAN Performance: 2.4GHz Receiver Characteristics

over operating free-air temperature range (unless otherwise noted). All RF and performance numbers are aligned to the module pin.

PARAMETER	CONDITION	MIN	TYP	MAX	UNIT
	RF_ANT1 pin 2.4GHz SISO				
Operation frequency range		2412		2484	MHz
Sensitivity: 20-MHz bandwidth. At < 10% PER limit	1 Mbps DSSS		–95.0		dBm
	2 Mbps DSSS		–92.0		
	5.5 Mbps CCK		–89.2		
	11 Mbps CCK		–86.3		
	6 Mbps OFDM		–91.0		
	9 Mbps OFDM		–89.0		
	12 Mbps OFDM		–88.0		
	18 Mbps OFDM		–85.5		
	24 Mbps OFDM		–82.5		
	36 Mbps OFDM		–79.0		
	48 Mbps OFDM		–74.0		
	54 Mbps OFDM		–72.5		
	MCS0 MM 4K		–89.3		
	MCS1 MM 4K		–86.5		
	MCS2 MM 4K		–84.5		
	MCS3 MM 4K		–81.5		
	MCS4 MM 4K		–78.0		
	MCS5 MM 4K		–73.5		
	MCS6 MM 4K		–71.5		
	MCS7 MM 4K		–70.0		
	MCS0 MM 4K 40 MHz		–86.0		
	MCS7 MM 4K 40 MHz		–66.3		
	MCS0 MM 4K MRC		–91.0		
	MCS7 MM 4K MRC		–73.0		
	MCS13 MM 4K		–70.0		
	MCS14 MM 4K		–69.0		
	MCS15 MM 4K		–68.3		
Maximum input level	OFDM	–20.0	–10.0		dBm
	CCK	–10.0	–6.0		
	DSSS	–4.0	–1.0		
Adjacent channel rejection: Sensitivity level +3 dB for OFDM; Sensitivity level +6 dB for 11b	2 Mbps DSSS	42.0			dB
	11 Mbps CCK	38.0			
	54 Mbps OFDM	2.0			
RX leakage			–70		dBm
PER floor			1.0%		
RSSI accuracy				±3	dB

Copyright © 2025 Texas Instruments Incorporated

7.7 WLAN Performance: 2.4GHz Transmitter Power

over operating free-air temperature range (unless otherwise noted). All RF and performance numbers are aligned to the module pin.

PARAMETER	CONDITION[1]	MIN	TYP	MAX	UNIT
	RF_ANT1 Pin 2.4GHz SISO				
Output Power: Maximum RMS output power measured at 1 dB from IEEE spectral mask or EVM[2]	1 Mbps DSSS		17.3		dBm
	2 Mbps DSSS		17.3		
	5.5 Mbps CCK		17.3		
	11 Mbps CCK		17.3		
	6 Mbps OFDM		17.1		
	9 Mbps OFDM		17.1		
	12 Mbps OFDM		17.1		
	18 Mbps OFDM		17.1		
	24 Mbps OFDM		16.2		
	36 Mbps OFDM		15.3		
	48 Mbps OFDM		14.6		
	54 Mbps OFDM		13.8		
	MCS0 MM		16.1		
	MCS1 MM		16.1		
	MCS2 MM		16.1		
	MCS3 MM		16.1		
	MCS4 MM		15.3		
	MCS5 MM		14.6		
	MCS6 MM		13.8		
	MCS7 MM[3]		12.6		
	MCS0 MM 40 MHz		14.8		
	MCS7 MM 40 MHz		11.3		
	RF_ANT1 + RF_ANT2 MIMO				
	MCS12 (WL18x5)		18.5		dBm
	MCS13 (WL18x5)		17.4		
	MCS14 (WL18x5)		14.5		
	MCS15 (WL18x5)		13.4		
	RF_ANT1 + RF_ANT2				
Operation frequency range		2412		2484	MHz
Return loss			–10.0		dB
Reference input impedance			50.0		Ω

(1) Maximum transmitter power (TP) degradation of up to 30% is expected, starting from 80°C ambient temperature on MIMO operation

(2) Regulatory constraints limit TI module output power to the following:

- Channel 14 is used only in Japan; to keep the channel spectral shaping requirement, the power is limited: 14.5 dBm.
- Channels 1, 11 at OFDM legacy and HT 20-MHz rates: 12 dBm
- Channels 1, 11 at HT 40-MHz rates: 10 dBm
- Channel 7 at HT 40-MHz lower rates: 10 dBm
- Channel 5 at HT 40-MHz upper rates: 10 dBm
- All 11B rates are limited to 16 dBm to comply with the ETSI PSD 10 dBm/MHz limit.
- All OFDM rates are limited to 16.5 dBm to comply with the ETSI EIRP 20 dBm limit.
- For clarification regarding power limitation, see the *WL18xx .INI File Application Report*.

(3) To ensure compliance with the EVM conditions specified in the PHY chapter of IEEE Std 802.11™ – 2012:

- MCS7 20 MHz channel 12 output power is 2 dB lower than the typical value.

Copyright © 2025 Texas Instruments Incorporated

- MCS7 20 MHz channel 8 output power is 1 dB lower than the typical value.

7.8 WLAN Performance: 5GHz Receiver Characteristics

over operating free-air temperature range (unless otherwise noted). All RF and performance numbers are aligned to the module pin.

PARAMETER	CONDITION	MIN	TYP	MAX	UNIT
RF_ANT1 or RF_ANT2					
Operation frequency range		4910.0		5825.0	MHz
Sensitivity: 20-MHz bandwidth. At < 10% PER limit	6 Mbps OFDM 1K		–92.5		dBm
	9 Mbps OFDM 1K		–90.5		
	12 Mbps OFDM 1K		–90.0		
	18 Mbps OFDM 1K		–87.5		
	24 Mbps OFDM 1K		–84.5		
	36 Mbps OFDM 1K		–81.0		
	48 Mbps OFDM 1K		–76.5		
	54 Mbps OFDM 1K		–74.6		
	MCS0 MM 4K		–91.4		
	MCS1 MM 4K		–88.0		
	MCS2 MM 4K		–86.0		
	MCS3 MM 4K		–83.0		
	MCS4 MM 4K		–79.8		
	MCS5 MM 4K		–75.5		
	MCS6 MM 4K		–74.0		
	MCS7 MM 4K		–72.4		
	MCS0 MM 4K 40 MHz		–88.5		
	MCS7 MM 4K 40 MHz		–69.3		
Maximum input level	OFDM	–30.0	–15.0		dBm
Adjacent channel rejection sensitivity +3 dB	OFDM54	2.0			dBm
RX LO leakage			–52.0		dBm
PER floor			1.0%	2.0%	
RSSI accuracy			±3		dB

Copyright © 2025 Texas Instruments Incorporated

7.9 WLAN Performance: 5GHz Transmitter Power

over operating free-air temperature range (unless otherwise noted)

PARAMETER(1)	CONDITION(2)	MIN	TYP	MAX	UNIT
RF_ANT1 or RF_ANT2					
Operation frequency range		4920		5825	MHz
RMS output power complies with IEEE mask and EVM requirements(3)	6 Mbps OFDM		18.0		dBm
	9 Mbps OFDM		18.0		
	12 Mbps OFDM		18.0		
	18 Mbps OFDM		18.0		
	24 Mbps OFDM		17.4		
	36 Mbps OFDM		16.5		
	48 Mbps OFDM		15.8		
	54 Mbps OFDM		14.5		
	MCS0 MM		18.0		
	MCS1 MM 4K		18.0		
	MCS2 MM 4K		18.0		
	MCS3 MM 4K		18.0		
	MCS4 MM 4K		16.5		
	MCS5 MM 4K		15.8		
	MCS6 MM 4K		14.5		
	MCS7 MM 4K		13.0		
	MCS0 MM 40 MHz		16.5		
	MCS7 MM 40 MHz		12.0		
Output power resolution			0.125		dB
Return loss			–10.0		dB
Reference input impedance			50.0		Ω

(1) All RF and performance numbers are aligned to the module pin.
(2) Maximum TP degradation of up to 30% is expected, starting from 80°C ambient temperature on 5GHz TX operation.
(3) For further clarification regarding power limitation, see the *WL18xx INI File Guide*.

Copyright © 2025 Texas Instruments Incorporated

7.10 WLAN Performance: Currents

over operating free-air temperature range (unless otherwise noted)

PARAMETER(1)	SPECIFICATION	TYP (AVG) –25°C	UNIT
Receiver	Low-power mode (LPM) 2.4GHz RX SISO20 single chain	49	mA
	2.4GHz RX search SISO20	58	
	2.4GHz RX search MIMO20	74	
	2.4GHz RX search SISO40	63	
	2.4GHz RX 20 M SISO 11 CCK	60	
	2.4GHz RX 20 M SISO 6 OFDM	61	
	2.4GHz RX 20 M SISO MCS7	69	
	2.4GHz RX 20 M MRC 1 DSSS	74	
	2.4GHz RX 20 M MRC 6 OFDM	81	
	2.4GHz RX 20 M MRC 54 OFDM	85	
	2.4GHz RX 40-MHz MCS7	81	
	5GHz RX 20-MHz OFDM6	68	
	5GHz RX 20-MHz MCS7	77	
	5GHz RX 40-MHz MCS7	85	
Transmitter(2)	2.4GHz TX 20 M SISO 6 OFDM	285	mA
	2.4GHz TX 20 M SISO 11 CCK	283	
	2.4GHz TX 20 M SISO 54 OFDM	247	
	2.4GHz TX 20 M SISO MCS7	238	
	2.4GHz TX 20 M MIMO MCS15	510	
	2.4GHz TX 40 M SISO MCS7	243	
	5GHz TX 20 M SISO 6 OFDM	366	
	5GHz TX 20 M SISO 54 OFDM	329	
	5GHz TX 20 M SISO MCS7	324	
	5GHz TX 40 M SISO MCS7	332	

(1) All RF and performance numbers are aligned to the module pin.
(2) Numbers reflect the typical current consumption at maximum output power per rate.

Copyright © 2025 Texas Instruments Incorporated

7.11 Bluetooth Performance: BR, EDR Receiver Characteristics—In-Band Signals

over operating free-air temperature range (unless otherwise noted)

PARAMETER[1]	CONDITION		MIN	TYP	MAX	UNIT
Bluetooth BR, EDR operation frequency range			2402		2480	MHz
Bluetooth BR, EDR channel spacing				1		MHz
Bluetooth BR, EDR input impedance				50		Ω
Bluetooth BR, EDR sensitivity[2] dirty TX on	BR, BER = 0.1%			–92.2		dBm
	EDR2, BER = 0.01%			–91.7		
	EDR3, BER = 0.01%			–84.7		
Bluetooth EDR BER floor at sensitivity + 10 dB Dirty TX off (for 1,600,000 bits)	EDR2		1e-6			
	EDR3		1e-6			
Bluetooth BR, EDR maximum usable input power	BR, BER = 0.1%		–5.0			dBm
	EDR2, BER = 0.1%		–15.0			
	EDR3, BER = 0.1%		–15.0			
Bluetooth BR intermodulation	Level of interferers for n = 3, 4, and 5		–36.0	–30.0		dBm
Bluetooth BR, EDR C/I performance Numbers show wanted signal-to-interfering-signal ratio. Smaller numbers indicate better C/I performances (Image frequency = –1 MHz)	BR, co-channel				10	dB
	EDR, co-channel	EDR2			12	
		EDR3			20	
	BR, adjacent ±1 MHz				–3.0	
	EDR, adjacent ±1 MHz, (image)	EDR2			–3.0	
		EDR3			2.0	
	BR, adjacent +2 MHz				–33.0	
	EDR, adjacent +2 MHz	EDR2			–33.0	
		EDR3			–28.0	
	BR, adjacent –2 MHz				–20.0	
	EDR, adjacent –2 MHz	EDR2			–20.0	
		EDR3			–13.0	
	BR, adjacent ≥I±3I MHz				–42.0	
	EDR, adjacent ≥I±3I MHz	EDR2			–42.0	
		EDR3			–36.0	
Bluetooth BR, EDR RF return loss				–10.0		dB

(1) All RF and performance numbers are aligned to the module pin.
(2) Sensitivity degradation up to –3dB may occur due to fast clock harmonics with dirty TX on.

Copyright © 2025 Texas Instruments Incorporated

7.12 Bluetooth Performance: Transmitter, BR

over operating free-air temperature range (unless otherwise noted)

PARAMETER[1]		MIN	TYP	MAX	UNIT
BR RF output power[2]	V_{BAT} ≥ 3V[3]		11.7		dBm
	V_{BAT} < 3V[3]		7.2		
BR gain control range			30.0		dB
BR power control step			5.0		dB
BR adjacent channel power |M-N| = 2			–43.0		dBm
BR adjacent channel power |M-N| > 2			–48.0		dBm

(1) All RF and performance numbers are aligned to the module pin.
(2) Values reflect maximum power. Reduced power is available using a vendor-specific (VS) command.
(3) VBAT is measured with an on-chip ADC that has an accuracy error of up to 5%.

7.13 Bluetooth Performance: Transmitter, EDR

over operating free-air temperature range (unless otherwise noted)

PARAMETER[1]		MIN	TYP	MAX	UNIT
EDR output power[2]	V_{BAT} ≥ 3V[3]		7.2		dBm
	V_{BAT} < 3V[3]		5.2		
EDR gain control range			30		dB
EDR power control step			5		dB
EDR adjacent channel power |M-N| = 1			–36		dBc
EDR adjacent channel power |M-N| = 2			–30		dBm
EDR adjacent channel power |M-N| > 2			–42		dBm

(1) All RF and performance numbers are aligned to the module pin.
(2) Values reflect default maximum power. Maximum power can be changed using a VS command.
(3) VBAT is measured with an on-chip ADC that has an accuracy error of up to 5%.

7.14 Bluetooth Performance: Modulation, BR

over operating free-air temperature range (unless otherwise noted)

CHARACTERISTICS[1]	CONDITION[2]		MIN	TYP	MAX	UNIT
BR –20-dB bandwidth				925	995	kHz
BR modulation characteristics	Δf1avg	Mod data = 4 1s, 4 0s: 111100001111...	145	160	170	kHz
	Δf2max ≥ limit for at least 99.9% of all Δf2max	Mod data = 1010101...	120	130		kHz
	Δf2avg, Δf1avg		85%	88%		
BR carrier frequency drift	One-slot packet		–25		25	kHz
	Three- and five-slot packet		–35		35	kHz
BR drift rate	|fk+5 – fk| , k = 0 to max				15	kHz/50 µs
BR initial carrier frequency tolerance[3]	f0–fTX		±75		±75	kHz

(1) All RF and performance numbers are aligned to the module pin.
(2) Performance values reflect maximum power.
(3) Numbers include XTAL frequency drift over temperature and aging.

Copyright © 2025 Texas Instruments Incorporated

7.15 Bluetooth Performance: Modulation, EDR

over operating free-air temperature range (unless otherwise noted)

PARAMETER(1) (2)	CONDITION	MIN	TYP	MAX	UNIT
EDR carrier frequency stability		–5		5	kHz
EDR initial carrier frequency tolerance(3)		±75		±75	kHz
EDR RMS DEVM	EDR2		4%	15%	
	EDR3		4%	10%	
EDR 99% DEVM	EDR2			30%	
	EDR3			20%	
EDR peak DEVM	EDR2		9%	25%	
	EDR3		9%	18%	

(1) All RF and performance numbers are aligned to the module pin.
(2) Performance values reflect maximum power.
(3) Numbers include XTAL frequency drift over temperature and aging.

7.16 Bluetooth Low Energy Performance: Receiver Characteristics – In-Band Signals

over operating free-air temperature range (unless otherwise noted)

PARAMETER(1)	CONDITION(2)	MIN	TYP	MAX	UNIT
Bluetooth Low Energy operation frequency range		2402		2480	MHz
Bluetooth Low Energy channel spacing			2		MHz
Bluetooth Low Energy input impedance			50		Ω
Bluetooth Low Energy sensitivity(3) Dirty TX on			–92.2		dBm
Bluetooth Low Energy maximum usable input power		–5			dBm
Bluetooth Low Energy intermodulation characteristics	Level of interferers. For n = 3, 4, 5	–36	–30		dBm
Bluetooth Low Energy C/I performance. Note: Numbers show wanted signal-to-interfering-signal ratio. Smaller numbers indicate better C/I performance. Image = –1MHz	Low energy, co-channel			12	dB
	Low energy, adjacent ±1MHz			0	
	Low energy, adjacent +2MHz			–38	
	Low energy, adjacent –2MHz			–15	
	Low energy, adjacent ≥ |±3| MHz			–40	

(1) All RF and performance numbers are aligned to the module pin.
(2) BER of 0.1% corresponds to PER of 30.8% for a minimum of 1500 transmitted packets, according to the Bluetooth Low Energy test specification.
(3) Sensitivity degradation of up to –3dB can occur due to fast clock harmonics.

7.17 Bluetooth Low Energy Performance: Transmitter Characteristics

over operating free-air temperature range (unless otherwise noted)

PARAMETER(1)		MIN	TYP	MAX	UNIT
Bluetooth Low Energy RF output power(2)	V_{BAT} ≥ 3V(3)		7.0		dBm
	V_{BAT} < 3V(3)		7.0		
Bluetooth Low Energy adjacent channel power |M-N| = 2			–51.0		dBm
Bluetooth Low Energy adjacent channel power |M-N| > 2			–54.0		dBm

(1) All RF and performance numbers are aligned to the module pin.
(2) Bluetooth Low Energy power is restricted to comply with the ETSI 10dBm EIRP limit requirement.
(3) VBAT is measured with an on-chip ADC that has an accuracy error of up to 5%.

Copyright © 2025 Texas Instruments Incorporated

7.18 Bluetooth Low Energy Performance: Modulation Characteristics

over operating free-air temperature range (unless otherwise noted)

CHARACTERISTICS[1]	CONDITION[2]		MIN	TYP	MAX	UNIT
Bluetooth Low Energy modulation characteristics	Δf1avg	Mod data = 4 1s, 4 0s: 111100001111...	240	250	260	kHz
	Δf2max ≥ limit for at least 99.9% of all Δf2max	Mod data = 1010101...	195	215		
	Δf2avg, Δf1avg		85%	90%		
Bluetooth Low Energy carrier frequency drift	lf0 – fnl , n = 2,3 …. K		–25		25	kHz
Bluetooth Low Energy drift rate	lf1 – f0l and lfn – fn-5l , n = 6,7…. K				15	kHz/50 µs
Bluetooth Low Energy initial carrier frequency tolerance[3]	fn – fTX		±75		±75	kHz

(1) All RF and performance numbers are aligned to the module pin.
(2) Performance values reflect maximum power.
(3) Numbers include XTAL frequency drift over temperature and aging.

7.19 Bluetooth BR and EDR Dynamic Currents

Current is measured at output power as follows: BR at 11.7dBm; EDR at 7.2dBm.

USE CASE[1] [2]	TYP	UNIT
BR voice HV3 + sniff	11.6	mA
EDR voice 2-EV3 no retransmission + sniff	5.9	mA
Sniff 1 attempt 1.28 s	178.0	µA
EDR A2DP EDR2 (master). SBC high quality – 345 kbps	10.4	mA
EDR A2DP EDR2 (master). MP3 high quality – 192 kbps	7.5	mA
Full throughput ACL RX: RX-2DH5[3] [4]	18.0	mA
Full throughput BR ACL TX: TX-DH5[4]	50.0	mA
Full throughput EDR ACL TX: TX-2DH5[4]	33.0	mA
Page scan or inquiry scan (scan interval is 1.28 s or 11.25 ms, respectively)	253.0	µA
Page scan and inquiry scan (scan interval is 1.28 s and 2.56 s, respectively)	332.0	µA

(1) The role of Bluetooth in all scenarios except A2DP is slave.
(2) CL1P5 PA is connected to V_{BAT}, 3.7V.
(3) ACL RX has the same current in all modulations.
(4) Full throughput assumes data transfer in one direction.

7.20 Bluetooth Low Energy Currents

All current measured at output power of 6.5dBm

USE CASE[1]	TYP	UNIT
Advertising, not connectable[2]	131	µA
Advertising, discoverable[2]	143	µA
Scanning[3]	266	µA
Connected, master role, 1.28s connect interval[4]	124	µA
Connected, slave role, 1.28s connect interval [4]	132	µA

(1) CL1p% PA is connected to V_{BAT}, 3.7V.
(2) Advertising in all three channels, 1.28s advertising interval, 15 bytes advertise data
(3) Listening to a single frequency per window, 1.28s scan interval, 11.25ms scan window
(4) Zero slave connection latency, empty TX and RX LL packets

Copyright © 2025 Texas Instruments Incorporated

7.21 Timing and Switching Characteristics

7.21.1 Power Management

7.21.1.1 Block Diagram – Internal DC-DCs

The device incorporates three internal DC-DCs (switched-mode power supplies) to provide efficient internal supplies, derived from V_{BAT}.

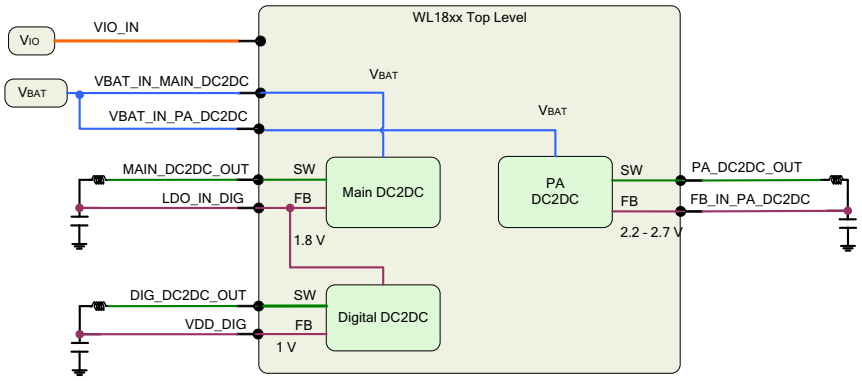

Figure 7-1. Internal DC-DCs

7.21.2 Power-Up and SHUTDOWN States

The correct power-up and shutdown sequences must be followed to avoid damage to the device.

While V_{BAT} or V_{IO} or both are deasserted, no signals should be driven to the device. The only exception is the slow clock that is a failsafe I/O.

While V_{BAT}, V_{IO}, and slow clock are fed to the device, but WL_EN is deasserted (low), the device is in SHUTDOWN state. In SHUTDOWN state all functional blocks, internal DC-DCs, clocks, and LDOs are disabled.

To perform the correct power-up sequence, assert (high) WL_EN. The internal DC-DCs, LDOs, and clock start to ramp and stabilize. Stable slow clock, V_{IO}, and V_{BAT} are prerequisites to the assertion of one of the enable signals.

To perform the correct shut-down sequence, deassert (low) WL_EN while all the supplies to the device (V_{BAT}, V_{IO}, and slow clock) are still stable and available. The supplies to the chip (V_{BAT} and V_{IO}) can be deasserted only after both enable signals are deasserted (low).

Figure 7-2 shows the general power scheme for the module, including the power-down sequence.

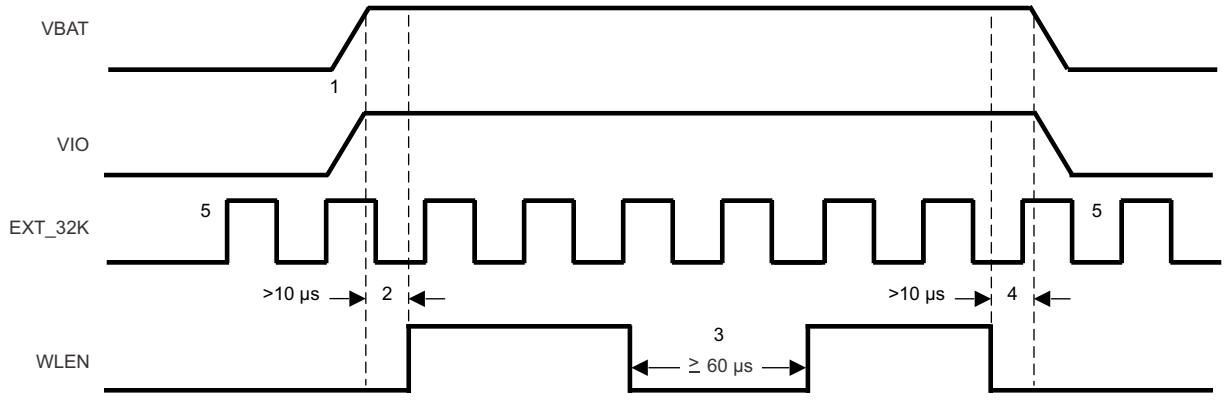

NOTE: 1. Either VBAT or VIO can come up first.
2. VBAT and VIO supplies and slow clock (SCLK), must be stable prior to EN being asserted and at all times. When the EN is active.
3. At least 60µs is required between two successive device enables. The device is assumed to be in shutdown state during that period, meaning all enables to the device are LOW for that minimum duration.

Copyright © 2025 Texas Instruments Incorporated

4. EN must be deasserted at least 10µs before VBAT or VIO supply can be lowered (order of supply turn off after EN shutdown is immaterial).
5. EXT_32K - Failsafe I/O

Figure 7-2. Power-Up System

7.21.3 Chip Top-level Power-Up Sequence

Figure 7-3 shows the top-level power-up sequence for the chip.

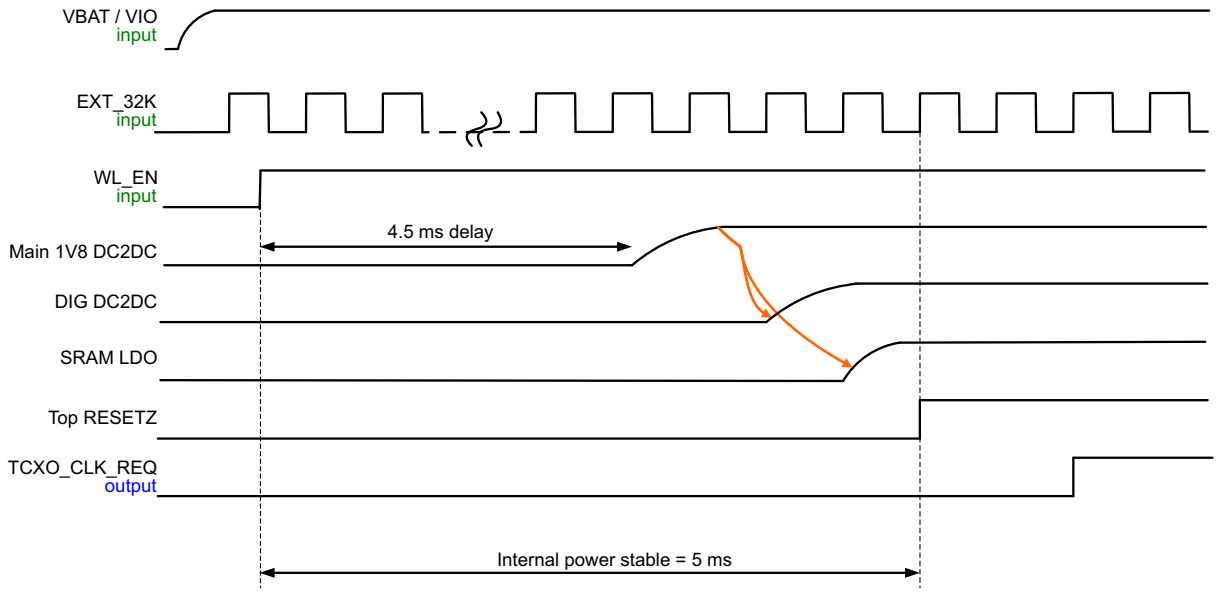

Figure 7-3. Chip Top-Level Power-Up Sequence

Copyright © 2025 Texas Instruments Incorporated

7.21.4 WLAN Power-Up Sequence

Figure 7-4 shows the WLAN power-up sequence.

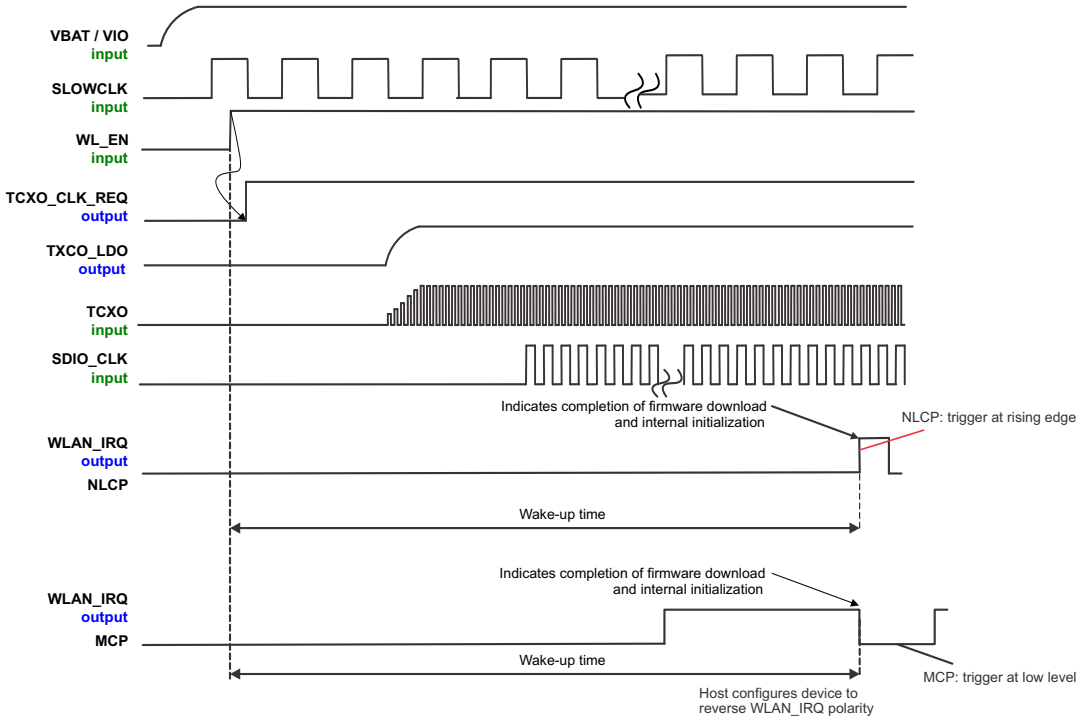

Figure 7-4. WLAN Power-Up Sequence

7.21.5 Bluetooth-Bluetooth Low Energy Power-Up Sequence

Figure 7-5 shows the Bluetooth-Bluetooth Low Energy power-up sequence.

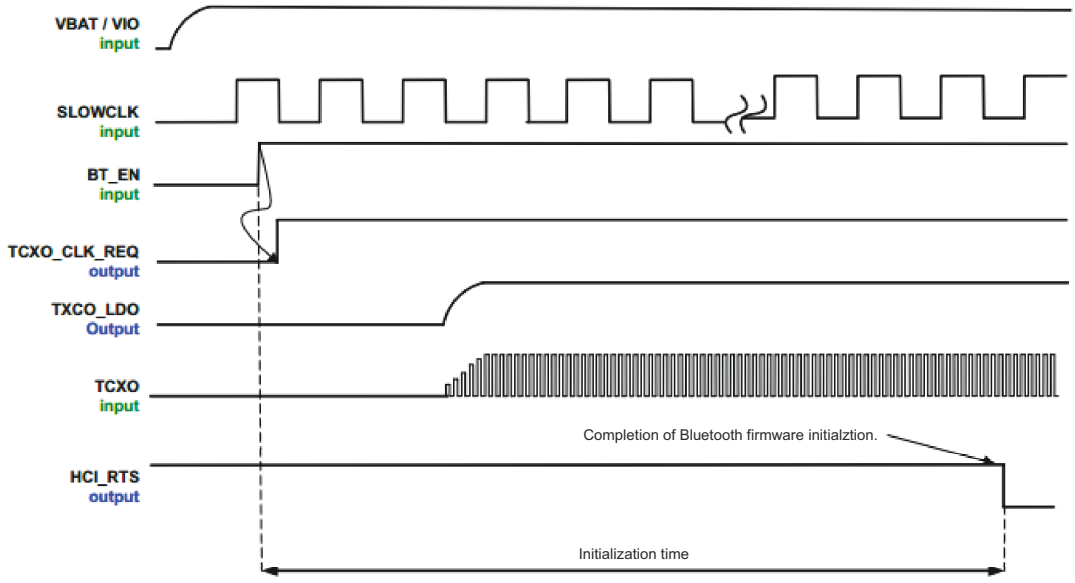

Figure 7-5. Bluetooth-Bluetooth Low Energy Power-Up Sequence

Copyright © 2025 Texas Instruments Incorporated

7.21.6 WLAN SDIO Transport Layer

The SDIO is the host interface for WLAN. The interface between the host and the WL18xx module uses an SDIO interface and supports a maximum clock rate of 50 MHz.

The device SDIO also supports the following features of the SDIO V3 specification:

- 4-bit data bus
- Synchronous and asynchronous in-band interrupt
- Default and high-speed (HS, 50 MHz) timing
- Sleep and wake commands

7.21.6.1 SDIO Timing Specifications

Figure 7-6 and Figure 7-7 show the SDIO switching characteristics over recommended operating conditions and with the default rate for input and output.

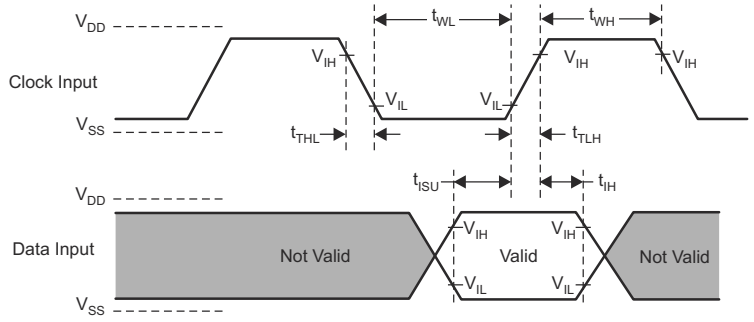

Figure 7-6. SDIO Default Input Timing

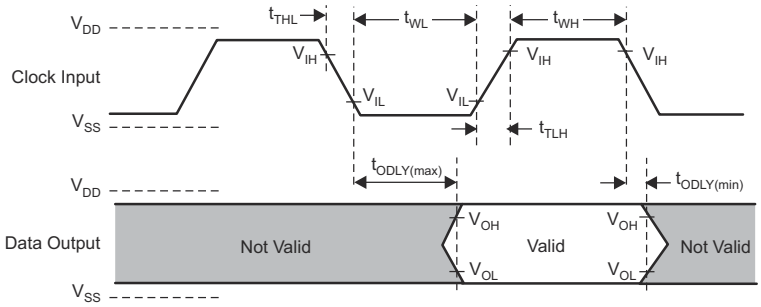

Figure 7-7. SDIO Default Output Timing

Table 7-1 lists the SDIO default timing characteristics.

Table 7-1. SDIO Default Timing Characteristics

(1)		MIN	MAX	UNIT
f_{clock}	Clock frequency, CLK(2)	0.0	26.0	MHz
DC	Low, high duty cycle(2)	40.0%	60.0%	
t_{TLH}	Rise time, CLK(2)		10.0	ns
t_{THL}	Fall time, CLK(2)		10.0	ns
t_{ISU}	Setup time, input valid before CLK ↑(2)	3.0		ns
t_{IH}	Hold time, input valid after CLK ↑(2)	2.0		ns
t_{ODLY}	Delay time, CLK ↓ to output valid(2)	7.0	10.0	ns
C_l	Capacitive load on outputs(2)		15.0	pF

(1) To change the data out clock edge from the falling edge (default) to the rising edge, set the configuration bit.
(2) Parameter values reflect maximum clock frequency.

Copyright © 2025 Texas Instruments Incorporated

7.21.6.2 SDIO Switching Characteristics – High Rate

Figure 7-8 and Figure 7-9 show the parameters for maximum clock frequency.

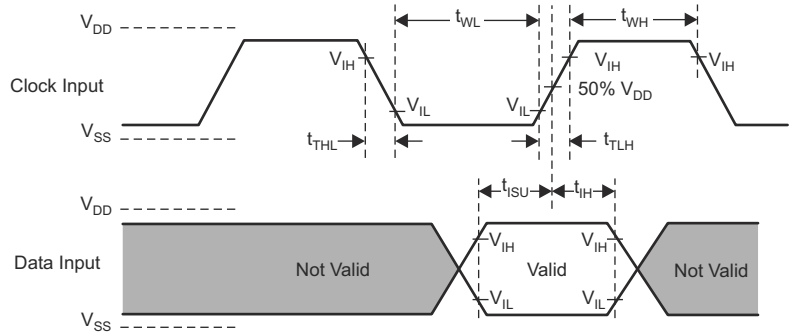

Figure 7-8. SDIO HS Input Timing

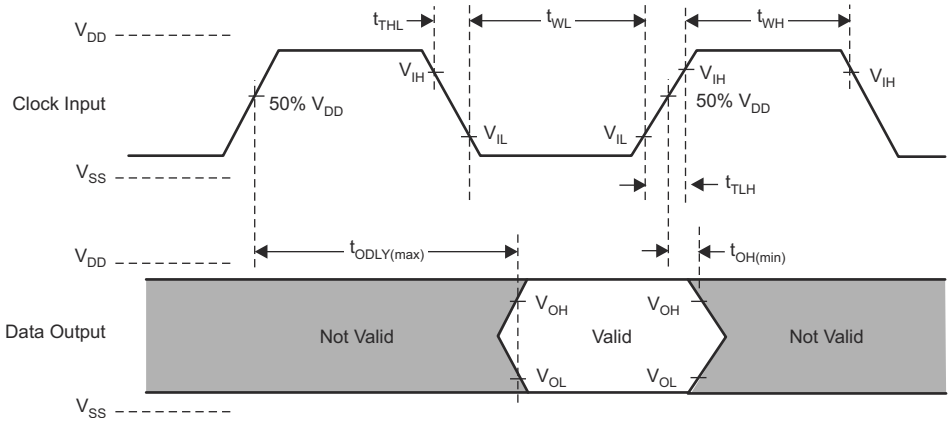

Figure 7-9. SDIO HS Output Timing

Table 7-2 lists the SDIO high-rate timing characteristics.

Table 7-2. SDIO HS Timing Characteristics

		MIN	MAX	UNIT
f_{clock}	Clock frequency, CLK	0.0	52.0	MHz
DC	Low, high duty cycle	40.0%	60.0%	
t_{TLH}	Rise time, CLK		3.0	ns
t_{THL}	Fall time, CLK		3.0	ns
t_{ISU}	Setup time, input valid before CLK ↑	3.0		ns
t_{IH}	Hold time, input valid after CLK ↑	2.0		ns
t_{ODLY}	Delay time, CLK ↑ to output valid	7.0	10.0	ns
C_l	Capacitive load on outputs		10.0	pF

Copyright © 2025 Texas Instruments Incorporated

7.21.7 HCI UART Shared-Transport Layers for All Functional Blocks (Except WLAN)

The device includes a UART module dedicated to the Bluetooth shared-transport, host controller interface (HCI) transport layer. The HCI transports commands, events, and ACL between the Bluetooth device and its host using HCI data packets ack as a shared transport for all functional blocks except WLAN. Table 7-3 lists the transport mechanism for WLAN and bluetooth audio.

Table 7-3. Transport Mechanism

WLAN	SHARED HCI FOR ALL FUNCTIONAL BLOCKS EXCEPT WLAN	Bluetooth VOICE-AUDIO
WLAN HS SDIO	Over UART	Bluetooth PCM

The HCI UART supports most baud rates (including all PC rates) for all fast-clock frequencies up to a maximum of 4 Mbps. After power up, the baud rate is set for 115.2 Kbps, regardless of the fast-clock frequency. The baud rate can then be changed using a VS command. The device responds with a Command Complete Event (still at 115.2 Kbps), after which the baud rate change occurs.

HCI hardware includes the following features:

- Receiver detection of break, idle, framing, FIFO overflow, and parity error conditions
- Receiver-transmitter underflow detection
- CTS, RTS hardware flow control
- 4 wire (H4)

Table 7-4 lists the UART default settings.

Table 7-4. UART Default Setting

PARAMETER	VALUE
Bit rate	115.2 Kbps
Data length	8 bits
Stop bit	1
Parity	None

7.21.7.1 UART 4-Wire Interface – H4

The interface includes four signals:

- TXD
- RXD
- CTS
- RTS

Flow control between the host and the device is byte-wise by hardware.

When the UART RX buffer of the device passes the flow-control threshold, the buffer sets the UART_RTS signal high to stop transmission from the host. When the UART_CTS signal is set high, the device stops transmitting on the interface. If HCI_CTS is set high in the middle of transmitting a byte, the device finishes transmitting the byte and stops the transmission.

Copyright © 2025 Texas Instruments Incorporated

Figure 7-10 shows the UART timing.

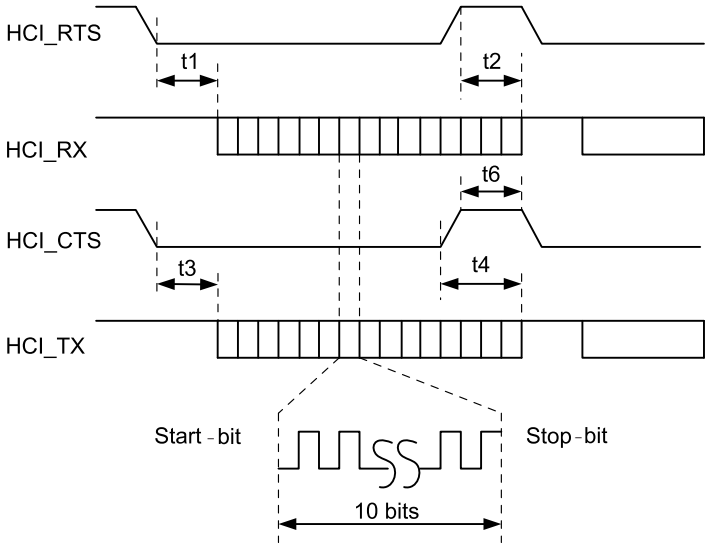

Figure 7-10. UART Timing Diagram

Table 7-5 lists the UART timing characteristics.

Table 7-5. UART Timing Characteristics

PARAMETER		CONDITION	MIN	TYP	MAX	UNIT
	Baud rate		37.5		4364	Kbps
	Baud rate accuracy per byte	Receive-transmit	–2.5%		1.5%	
	Baud rate accuracy per bit	Receive-transmit	–12.5%		12.5%	
t3	CTS low to TX_DATA on		0.0	2.0		µs
t4	CTS high to TX_DATA off	Hardware flow control			1.0	bytes
t6	CTS high pulse duration		1.0			Bit
t1	RTS low to RX_DATA on		0.0	2.0		µs
t2	RTS high to RX_DATA off	Interrupt set to 1/4 FIFO			16.0	bytes

Figure 7-11 shows the UART data frame.

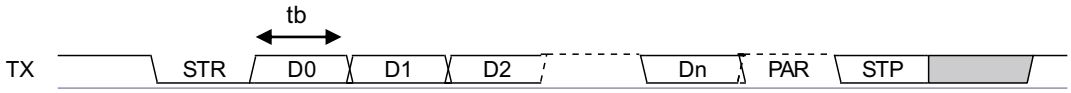

STR-Start-bit; D0..Dn - Data bits (LSB first); PAR - Parity bit (if used); STP - Stop-bit

Figure 7-11. UART Data Frame

Copyright © 2025 Texas Instruments Incorporated

7.21.8 Bluetooth Codec-PCM (Audio) Timing Specifications

Figure 7-12 shows the Bluetooth codec-PCM (audio) timing diagram.

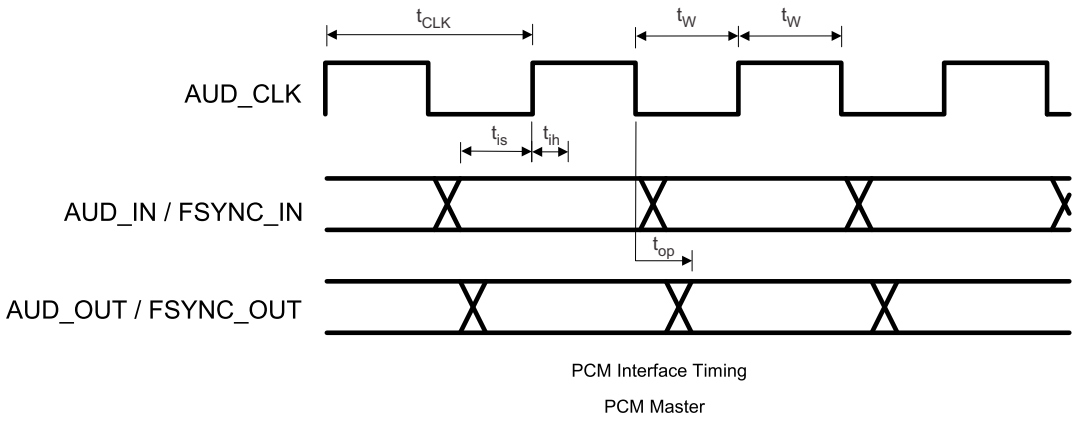

Figure 7-12. Bluetooth Codec-PCM (Audio) Master Timing Diagram

Table 7-6 lists the Bluetooth codec-PCM master timing characteristics.

Table 7-6. Bluetooth Codec-PCM Master Timing Characteristics

PARAMETER		MIN	MAX	UNIT
T_{clk}	Cycle time	162.76 (6.144 MHz)	15625 (64 kHz)	ns
T_w	High or low pulse duration	35% of T_{clk} min		
t_{is}	AUD_IN setup time	10.6		
t_{ih}	AUD_IN hold time	0		
t_{op}	AUD_OUT propagation time	0	15	
t_{op}	FSYNC_OUT propagation time	0	15	
C_l	Capacitive loading on outputs		40	pF

Table 7-7 lists the Bluetooth codec-PCM slave timing characteristics.

Table 7-7. Bluetooth Codec-PCM Slave Timing Characteristics

PARAMETER		MIN	MAX	UNIT
T_{clk}	Cycle time	81.38 (12.288 MHz)		ns
T_w	High or low pulse duration	35% of T_{clk} min		
t_{is}	AUD_IN setup time	5		
t_{ih}	AUD_IN hold time	0		
t_{is}	AUD_FSYNC setup time	5		
t_{ih}	AUD_FSYNC hold time	0		
t_{op}	AUD_OUT propagation time	0	19	
C_l	Capacitive loading on outputs		40	pF

Copyright © 2025 Texas Instruments Incorporated

8 Detailed Description

The WiLink 8 module is a self-contained connectivity solution based on WiLink 8 connectivity. As the eighth-generation connectivity combo chip from TI, the WiLink 8 module is based on proven technology.

Figure 8-1 shows a high-level view of the WL1837MOD variant.

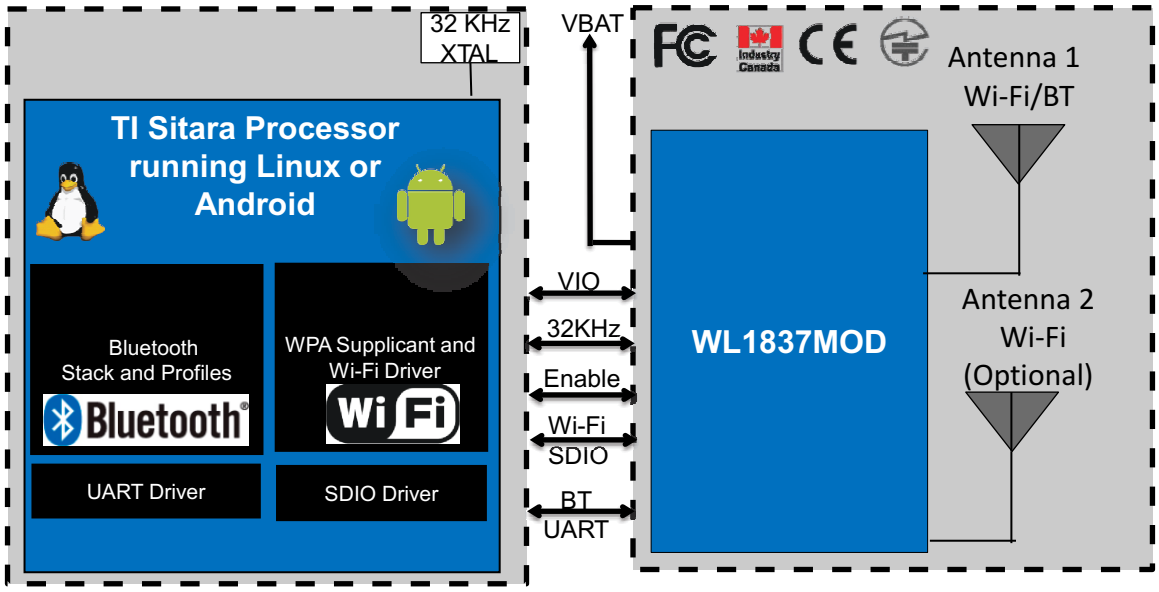

Figure 8-1. WL1837MOD High-Level System Diagram

Table 8-1, Table 8-2, and Table 8-3 list performance parameters along with shutdown and sleep currents.

Table 8-1. WLAN Performance Parameters

WLAN(1)	CONDITIONS	SPECIFICATION (TYP)	UNIT
Maximum TX power, 5GHz (OFDM6)	6Mbps OFDM	18	dBm
Maximum TX power, 2.4GHz (1DSSS)	1Mbps DSSS	16.5	dBm
Minimum sensitivity, 5GHz (OFDM6)	6Mbps OFDM	–92.5	dBm
Minimum sensitivity, 2.4GHz (1DSSS)	1Mbps DSSS	–95	dBm
Sleep current	Leakage, firmware retained	160	µA
Connected IDLE	No traffic IDLE connect	750	µA
RX search	2.4GHz SISO 20	58	mA
RX current (SISO20)	MCS7, 2.4GHz	69	mA
RX current (SISO20)	MCS7, 5GHz	77	mA
TX current (SISO20)	MCS7, 2.4GHz	238	mA
TX current (SISO20)	MCS7, 5GHz	324	mA
Maximum peak current consumption during calibration(2)		850	mA

(1) The system design power scheme must comply with both peak and average TX bursts.
(2) Peak current V_{BAT} can hit 850mA during device calibration.

- At wakeup, the WiLink 8 module performs the entire calibration sequence at the center of the 2.4GHz band.
- After a link is established, calibration is performed periodically (every 5 minutes) on the specific channel tuned.
- The maximum VBAT value is based on peak calibration consumption with a 30% margin.

Copyright © 2025 Texas Instruments Incorporated

Table 8-2. Bluetooth Performance Parameters

BLUETOOTH	CONDITIONS	SPECIFICATION (TYP)	UNIT
Maximum TX power	GFSK	11.7	dBm
Minimum sensitivity	GFSK	–92.2	dBm
Sniff	1 attempt, 1.28s (+4dBm)	178	µA
Page or inquiry	1.28s interrupt, 11.25ms scan window (+4dBm)	253	µA
A2DP	MP3 high quality 192kbps (+4dBm)	7.5	mA

Table 8-3. Shutdown and Sleep Currents

PARAMETER	POWER SUPPLY CURRENT	TYP	UNIT
Shutdown mode All functions shut down	VBAT	10	µA
	VIO	2	
WLAN sleep mode	VBAT	160	µA
	VIO	60	
Bluetooth sleep mode	VBAT	110	µA
	VIO	60	

8.1 WLAN Features

The device supports the following WLAN features:

- Integrated 2.4GHz power amplifiers (PAs) for a complete WLAN solution
- Baseband processor: IEEE Std 802.11a, 802.11b/g, and IEEE Std 802.11n data rates with 20MHz or 40MHz SISO and 20MHz MIMO
- Fully calibrated system (production calibration not required)
- Medium access controller (MAC)
  - Embedded Arm® central processing unit (CPU)
  - Hardware-based encryption-decryption using 64-, 128-, and 256-bit WEP, TKIP, or AES keys
  - Requirements for Wi-Fi-protected access (WPA and WPA2.0) and IEEE Std 802.11i (includes hardware-accelerated Advanced Encryption Standard [AES])
- New advanced coexistence scheme with Bluetooth and Bluetooth Low Energy wireless technology
- 2.4GHz and 5GHz radio
  - Internal LNA and PA
  - IEEE Std 802.11a, 802.11b, 802.11g, and 802.11n
- 4-bit SDIO host interface, including high speed (HS) and V3 modes

8.2 Bluetooth Features

The device supports the following Bluetooth features:

- Bluetooth 5.1 secure connection as well as CSA2
- Concurrent operation and built-in coexisting and prioritization handling of Bluetooth and Bluetooth Low Energy wireless technology, audio processing, and WLAN
- Dedicated audio processor supporting on-chip SBC encoding + A2DP
  - Assisted A2DP (A3DP): SBC encoding implemented internally
  - Assisted WB-speech (AWBS): modified SBC codec implemented internally

Copyright © 2025 Texas Instruments Incorporated

8.3 Bluetooth Low Energy Features

The device supports the following Bluetooth Low Energy features:

- Bluetooth 5.1 low-energy dual-mode standard
- All roles and role combinations, mandatory as well as optional
- Up to 10 low-energy connections
- Independent low energy buffering allowing multiple connections with no effect on BR-EDR performance

8.4 Device Certification

The WL18MODGI modules from TI (test grades 07 and 37) are certified for FCC, IC, ETSI/CE, and Japan MIC. TI customers who build products based on the WL18MODGI device from TI can save on testing costs and time per product family. Table 8-4 shows the certification list for the WL18MODGI module.

Table 8-4. Device Certification

REGULATORY BODY	SPECIFICATION	ID (IF APPLICABLE)
FCC (USA)	Part 15C + MPE FCC RF exposure	Z64-WL18DBMOD
ISED (Canada)	RSS-102 (MPE) and RSS-247 (Wi-Fi, Bluetooth)	451I-WL18DBMOD
ETSI/CE (Europe)	EN300328 v2.1.1 (2.4-GHz Wi-Fi, Bluetooth)	—
	EN301893 v2.1.1 (5-GHz Wi-Fi)	—
	EN62311:2008 (MPE)	—
	EN301489-1 v2.1.1 (general EMC)	—
	EN301489-17 v3.1.1 (EMC)	—
	EN60950-1:2006/A11:2009/A1:2010/A12:2011/A2:2013	—
MIC (Japan)	Article 49-20 of ORRE	201-140447

8.4.1 FCC Certification and Statement

The WL18MODGI modules from TI are certified for the FCC as a single-modular transmitter. The modules are FCC-certified radio modules that carry a modular grant. Users are cautioned that changes or modifications not expressly approved by the party responsible for compliance could void the authority of the user to operate the equipment.

This device complies with Part 15 of the FCC rules. Operation is subject to the following two conditions:

- This device may not cause harmful interference.
- This device must accept any interference received, including interference that may cause undesired operation of the device.

CAUTION

FCC RF Radiation Exposure Statement

This equipment complies with FCC radiation exposure limits set forth for an uncontrolled environment. End users must follow the specific operating instructions to satisfy RF exposure limits. This transmitter must not be colocated or operate with any other antenna or transmitter.

8.4.2 Innovation, Science, and Economic Development Canada (ISED)

The WL18MODGI modules from TI are certified for IC as a single-modular transmitter. The WL18MODGI modules from TI meet IC modular approval and labeling requirements. The IC follows the same testing and rules as the FCC regarding certified modules in authorized equipment. This device complies with Industry Canada licence-exempt RSS standards.

Operation is subject to the following two conditions:

- This device may not cause interference.

Copyright © 2025 Texas Instruments Incorporated

- This device must accept any interference, including interference that may cause undesired operation of the device.

Le présent appareil est conforme aux CNR d'Industrie Canada applicables aux appareils radio exempts de licence.

L'exploitation est autorisée aux deux conditions suivantes:

- L'appareil ne doit pas produire de brouillage.
- L'utilisateur de l'appareil doit accepter tout brouillage radioélectrique subi, même si le brouillage est susceptible d'en compromettre le fonctionnement.

CAUTION

IC RF Radiation Exposure Statement:

To comply with IC RF exposure requirements, this device and its antenna must not be colocated or operating in conjunction with any other antenna or transmitter.

Pour se conformer aux exigences de conformité RF canadienne l'exposition, cet appareil et son antenne ne doivent pas étre co-localisés ou fonctionnant en conjonction avec une autre antenne or transmitter.

8.4.3 ETSI/CE

The WL18MODGB modules conform to the EU Radio Equipment Directive. For further detains, see the full text of the EU Declaration of Conformity for the WL18MODGI (test grade 07) and WL18MODGI (test grade 37) devices.

8.4.4 MIC Certification

The WL18MODGI modules from TI are MIC certified against article 49-20 and the relevant articles of the Ordinance Regulating Radio Equipment. Operation is subject to the following condition:

- The host system does not contain a wireless wide area network (WWAN) device.

Copyright © 2025 Texas Instruments Incorporated

8.5 Module Markings

Figure 8-2 shows the markings for the TI WiLink 8 module.

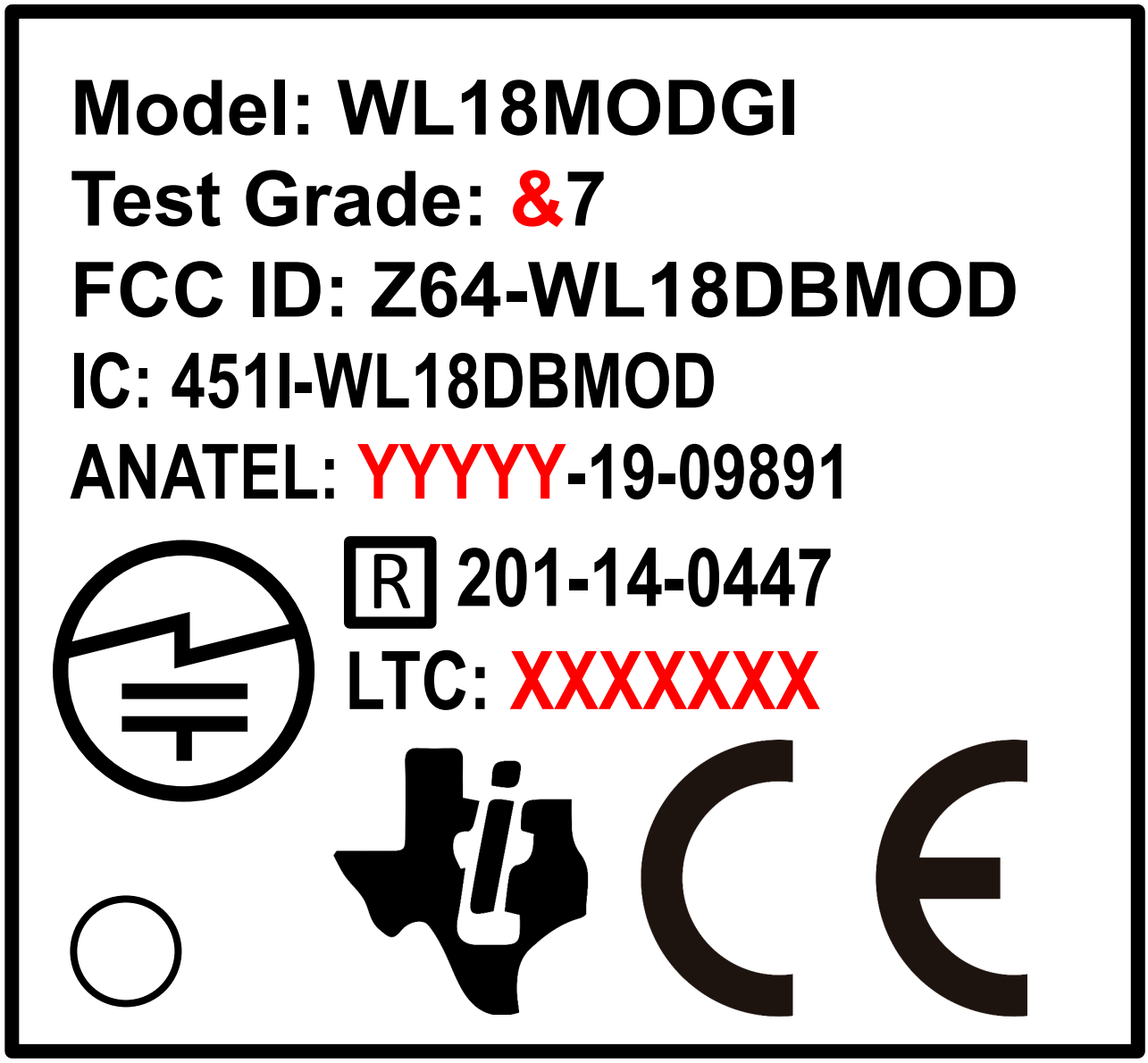

Figure 8-2. WiLink 8 Module Markings

Table 8-5 describes the WiLink 8 module markings.

Table 8-5. Description of WiLink™ 8 Module Markings

MARKING	DESCRIPTION
WL18MODGI	Model
&7	Test grade (for more information, see Section 8.6)
Z64-WL18DBMOD	FCC ID: single modular FCC grant ID
451I-WL18DBMOD	IC: single modular IC grant ID
201-140447	R: single modular TELEC grant ID
LTC (lot trace code): XXXXXXX	LTC: Reserved for TI Use
ANATEL: YYYYY-19-09891	ANATEL single modular grant ID

Copyright © 2025 Texas Instruments Incorporated

Table 8-5. Description of WiLink™ 8 Module Markings (continued)

MARKING	DESCRIPTION
.	TELEC compliance mark
CE	CE compliance mark

8.6 Test Grades

To minimize delivery time, TI may ship the device ordered or an equivalent device currently available that contains at least the functions of the part ordered. From all aspects, this device behaves exactly the same as the part ordered. For example, if a customer orders device WL1807MOD, the part shipped can be marked with a test grade of 37, 07 (see Table 8-6).

Table 8-6. Test Grade Markings for Model WL18MODGI

MARK	WLAN 2.4 and 5 GHz	Bluetooth
07	Tested	–
37	Tested	Tested

Copyright © 2025 Texas Instruments Incorporated

8.7 End Product Labeling

These modules are designed to comply with the FCC single modular FCC grant, FCC ID: Z64-WL18DBMOD. The host system using this module must display a visible label indicating the following text:

Contains FCC ID: Z64-WL18DBMOD

These modules are designed to comply with the IC single modular FCC grant, IC: 451I-WL18DBMOD. The host system using this module must display a visible label indicating the following text:

Contains IC: 451I-WL18DBMOD

This module is designed to comply with the JP statement, 201-140447. The host system using this module must display a visible label indicating the following text:

Contains transmitter module with certificate number: 201-140447

8.8 Manual Information to the End User

The OEM integrator must be aware of not providing information to the end user regarding how to install or remove this RF module in the user’s manual of the end product that integrates this module. The end user's manual must include all required regulatory information and warnings as shown in this manual.

Copyright © 2025 Texas Instruments Incorporated

9 Applications, Implementation, and Layout

Note

Information in the following applications sections is not part of the TI component specification, and TI does not warrant its accuracy or completeness. TI's customers are responsible for determining suitability of components for their purposes, as well as validating and testing their design implementation to confirm system functionality.

9.1 Application Information

9.1.1 Typical Application – WL1837MOD Reference Design

Figure 9-1 shows the TI WL1837MODGI reference design.

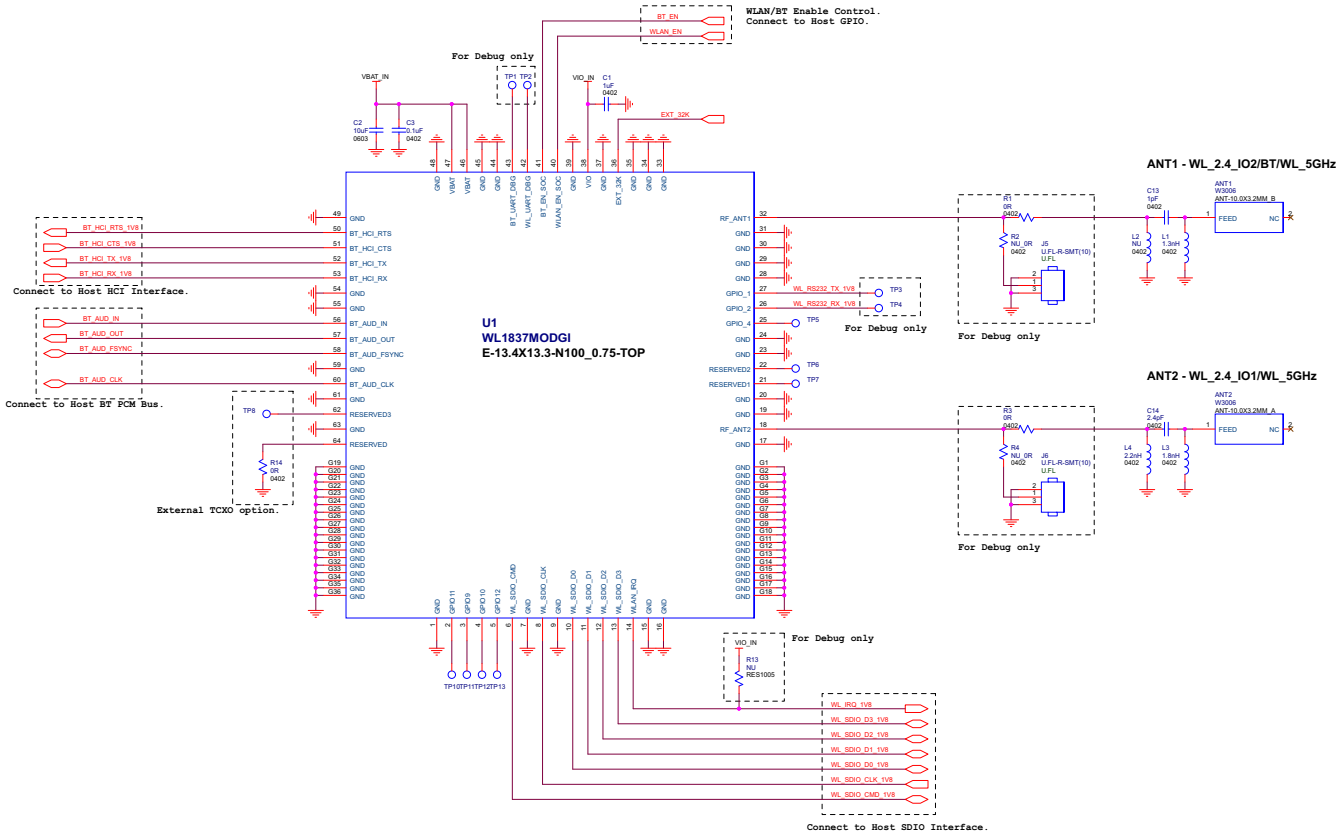

Figure 9-1. TI Module Reference Schematics

Table 9-1 lists the bill materials (BOM).

Table 9-1. Bill of Materials

ITEM	DESCRIPTION	PART NO.	PACKAGE	REFERENCE	QTY	MFR
1	WL1837 Wi-Fi / Bluetooth module	WL1837MODGI	13.4 × 13.3 × 2.0 mm	U1	1	TI
2	XOSC 3225 / 32.768 kHz / 1.8 V / ±50 ppm	7XZ3200005	3.2 × 2.5 × 1.0 mm	OSC1	1	TXC
3	ANT / Chip / 2.4 GHz and 5 GHz(1)	W3006	10.0 × 3.2 × 1.5 mm	ANT1, ANT2	2	Pulse
4	Mini-RF header receptacle	U.FL-R-SMT-1 (10)	3.0 × 2.6 × 1.25 mm	J5, J6	2	Hirose
5	Inductor 0402 / 1.3 nH / ±0.1 nH / SMD	LQP15MN1N3B02	0402	L1	1	Murata
6	Inductor 0402 / 1.8 nH / ±0.1 nH / SMD	LQP15MN1N8B02	0402	L3	1	Murata
7	Inductor 0402 / 2.2 nH / ±0.1 nH / SMD	LQP15MN2N2B02	0402	L4	1	Murata
8	Capacitor 0402 / 1 pF/ 50 V / C0G / ±0.1 pF	GJM1555C1H1R0BB01	0402	C13	1	Murata
9	Capacitor 0402 / 2.4 pF / 50 V / C0G / ±0.1 pF	GJM1555C1H2R4BB01	0402	C14	1	Murata
10	Capacitor 0402 / 0.1 µF / 10 V / X7R / ±10%	0402B104K100CT	0402	C3	1	Walsin
11	Capacitor 0402 / 1 µF / 6.3 V / X5R / ±10%/HF	GRM155R60J105KE19D	0402	C1	1	Murata
12	Capacitor 0603 / 10 µF / 6.3 V / X5R / ±20%	C1608X5R0J106M	0603	C2	1	TDK
13	Resistor 0402 / 0R / ±5%	WR04X000 PTL	0402	R1, R3	2	Walsin

(1) For more information, see the Pulse Electronics W3006 product page.

9.1.2 Design Recommendations

This section describes the layout recommendations for the WL1837 module, RF trace, and antenna.

Table 9-2 summarizes the layout recommendations.

Table 9-2. Layout Recommendations Summary

ITEM	DESCRIPTION
Thermal	
1	The proximity of ground vias must be close to the pad.
2	Signal traces must not be run underneath the module on the layer where the module is mounted.
3	Have a complete ground pour in layer 2 for thermal dissipation.
4	Have a solid ground plane and ground vias under the module for stable system and thermal dissipation.
5	Increase the ground pour in the first layer and have all of the traces from the first layer on the inner layers, if possible.
6	Signal traces can be run on a third layer under the solid ground layer, which is below the module mounting layer.
RF Trace and Antenna Routing	
7	The RF trace antenna feed must be as short as possible beyond the ground reference. At this point, the trace starts to radiate.
8	The RF trace bends must be gradual with an approximate maximum bend of 45° with trace mitered. RF traces must not have sharp corners.
9	RF traces must have via stitching on the ground plane beside the RF trace on both sides.
10	RF traces must have constant impedance (microstrip transmission line).
11	For best results, the RF trace ground layer must be the ground layer immediately below the RF trace. The ground layer must be solid.
12	There must be no traces or ground under the antenna section.
13	RF traces must be as short as possible. The antenna, RF traces, and modules must be on the edge of the PCB product. The proximity of the antenna to the enclosure and the enclosure material must also be considered.

Copyright © 2025 Texas Instruments Incorporated

Table 9-2. Layout Recommendations Summary (continued)

ITEM	DESCRIPTION
Supply and Interface	
14	The power trace for V_{BAT} must be at least 40-mil wide.
15	The 1.8-V trace must be at least 18-mil wide.
16	Make VBAT traces as wide as possible to ensure reduced inductance and trace resistance.
17	If possible, shield V_{BAT} traces with ground above, below, and beside the traces.
18	SDIO signals traces (CLK, CMD, D0, D1, D2, and D3) must be routed in parallel to each other and as short as possible (less than 12 cm). In addition, every trace length must be the same as the others. There should be enough space between traces – greater than 1.5 times the trace width or ground – to ensure signal quality, especially for the SDIO_CLK trace. Remember to keep these traces away from the other digital or analog signal traces. TI recommends adding ground shielding around these buses.
19	SDIO and digital clock signals are a source of noise. Keep the traces of these signals as short as possible. If possible, maintain a clearance around them.

9.1.3 RF Trace and Antenna Layout Recommendations

Figure 9-2 shows the location of the antenna on the WL1837MODCOM8I board as well as the RF trace routing from the WL1837 module (TI reference design). The Pulse multilayer antennas are mounted on the board with a specific layout and matching circuit for the radiation test conducted in FCC, CE, and IC certifications.

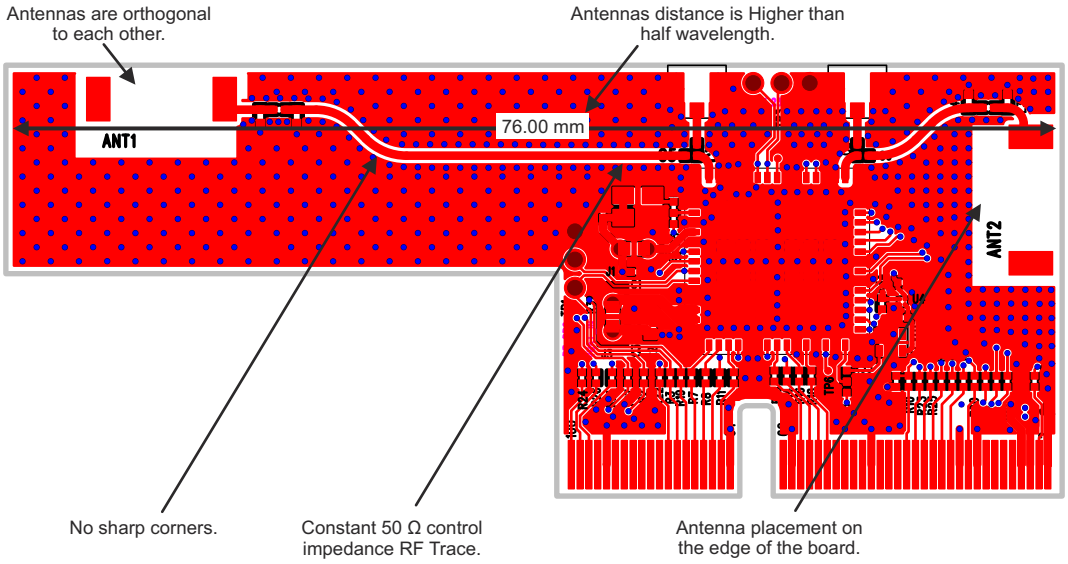

Figure 9-2. Location of Antenna and RF Trace Routing on the WL1837MODCOM8I Board

Follow these RF trace routing recommendations:

- RF traces must have 50Ω impedance.
- RF traces must not have sharp corners.
- RF traces must have via stitching on the ground plane beside the RF trace on both sides.
- RF traces must be as short as possible. The antenna, RF traces, and module must be on the edge of the PCB product in considering the product enclosure material and proximity.

Copyright © 2025 Texas Instruments Incorporated

9.1.4 Module Layout Recommendations

Figure 9-3 and Figure 9-4 show layer 1 and layer 2 of the TI module layout.

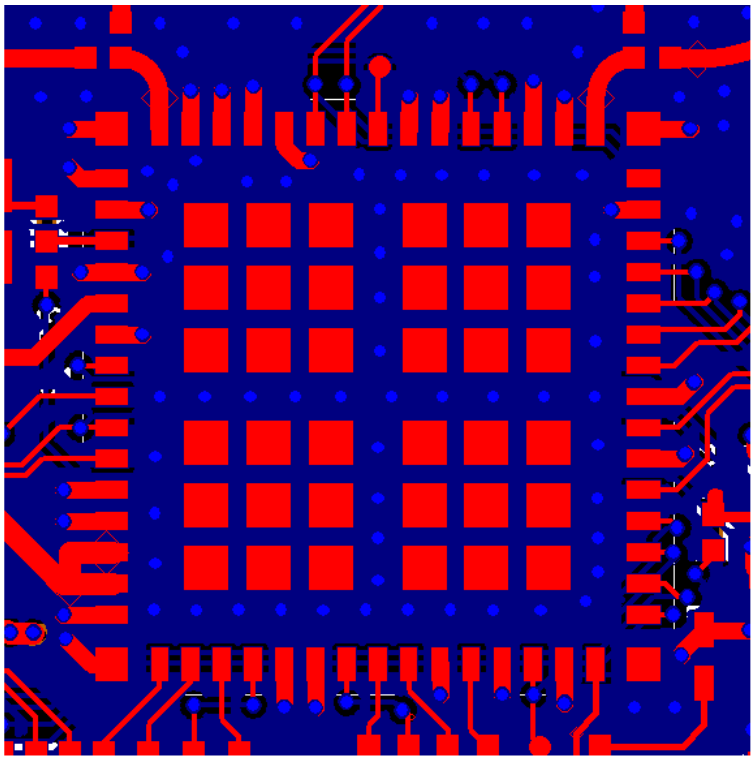

Figure 9-3. TI Module Layout: Layer 1

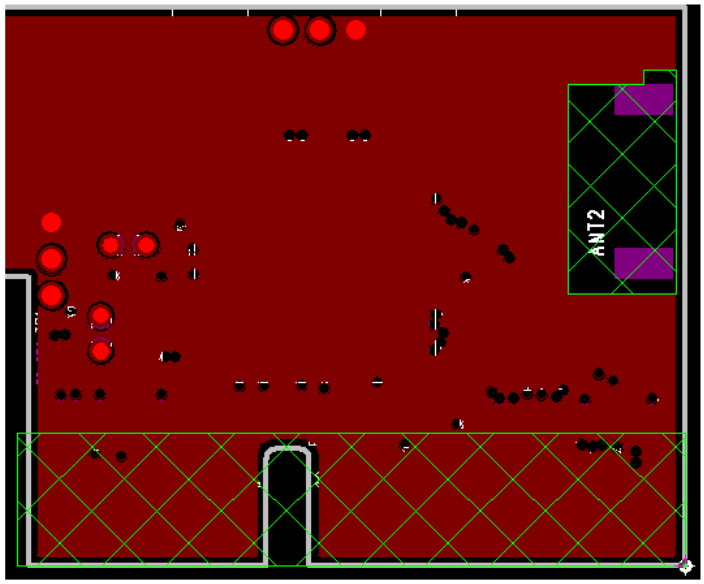

Figure 9-4. TI Module Layout: Layer 2 (Solid GND)

Copyright © 2025 Texas Instruments Incorporated

Follow these module layout recommendations:

- Ensure a solid ground plane and ground vias under the module for a stable system and thermal dissipation.
- Do not run signal traces under the module on a layer where the module is mounted.
- Signal traces can be run on a third layer under the solid ground layer and beneath the module mounting.
- Run the host interfaces with ground on the adjacent layer to improve the return path.
- TI recommends routing the signals as short as possible to the host.

9.1.5 Thermal Board Recommendations

The TI module uses µvias for layers 1 through 6 with full copper filling, providing heat flow all the way to the module ground pads.

TI recommends using one big ground pad under the module with vias all the way to connect the pad to all ground layers (see Figure 9-5).

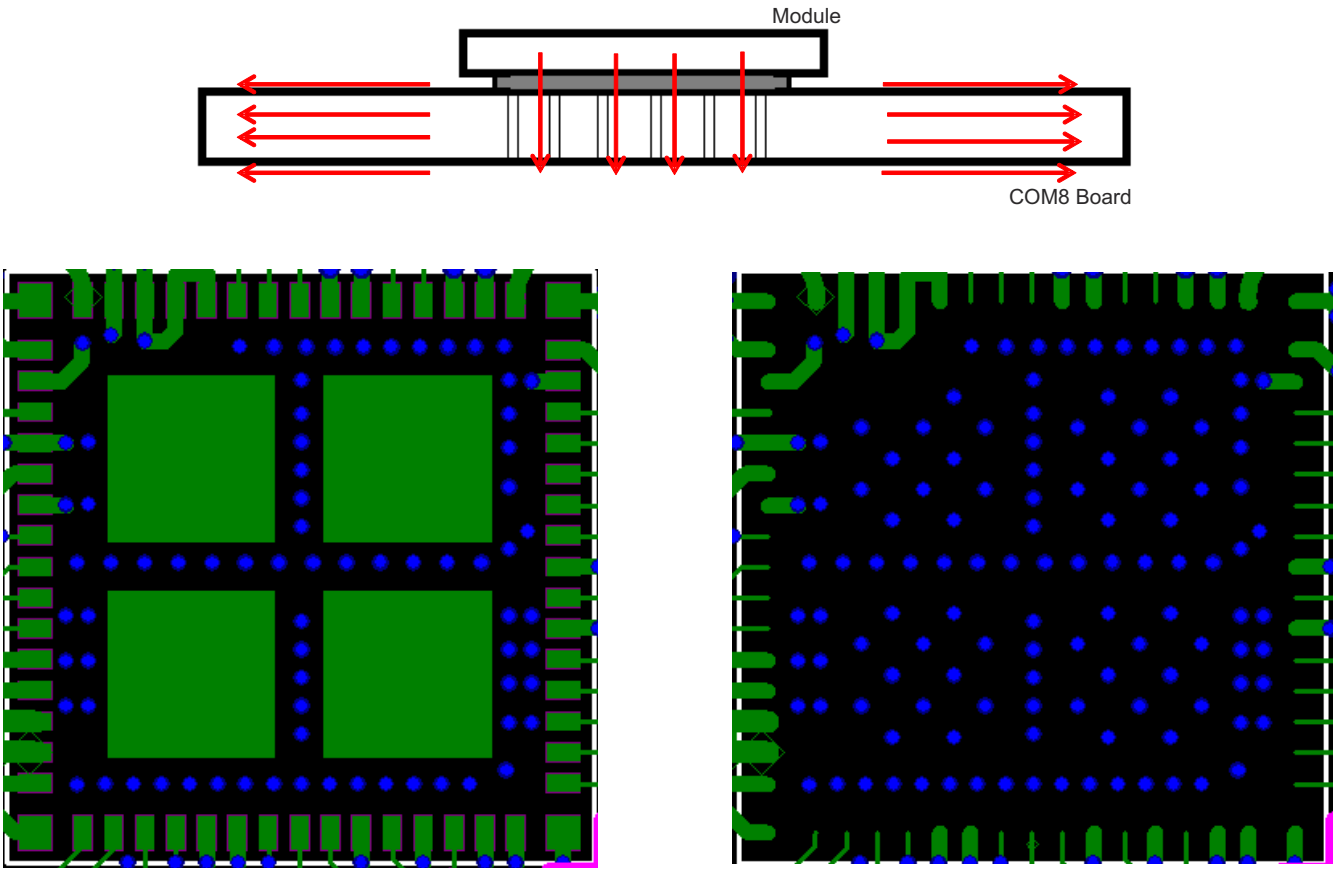

Figure 9-5. Block of Ground Pads on Bottom Side of Package

Figure 9-6 shows via array patterns, which are applied wherever possible to connect all of the layers to the TI module central or main ground pads.



Figure 9-6. Via Array Patterns

Copyright © 2025 Texas Instruments Incorporated

9.1.6 Baking and SMT Recommendations

9.1.6.1 Baking Recommendations

Follow these baking guidelines for the WiLink 8 module:

- Follow MSL level 3 to perform the baking process.
- After the bag is open, devices subjected to reflow solder or other high-temperature processes must be mounted within 168 hours of factory conditions (< 30°C/60% RH) or stored at <10% RH.
- If the humidity indicator card reads >10%, devices require baking before they are mounted.
- If baking is required, bake devices for 8 hours at 125°C.

9.1.6.2 SMT Recommendations

Figure 9-7 shows the recommended reflow profile for the WiLink 8 module.

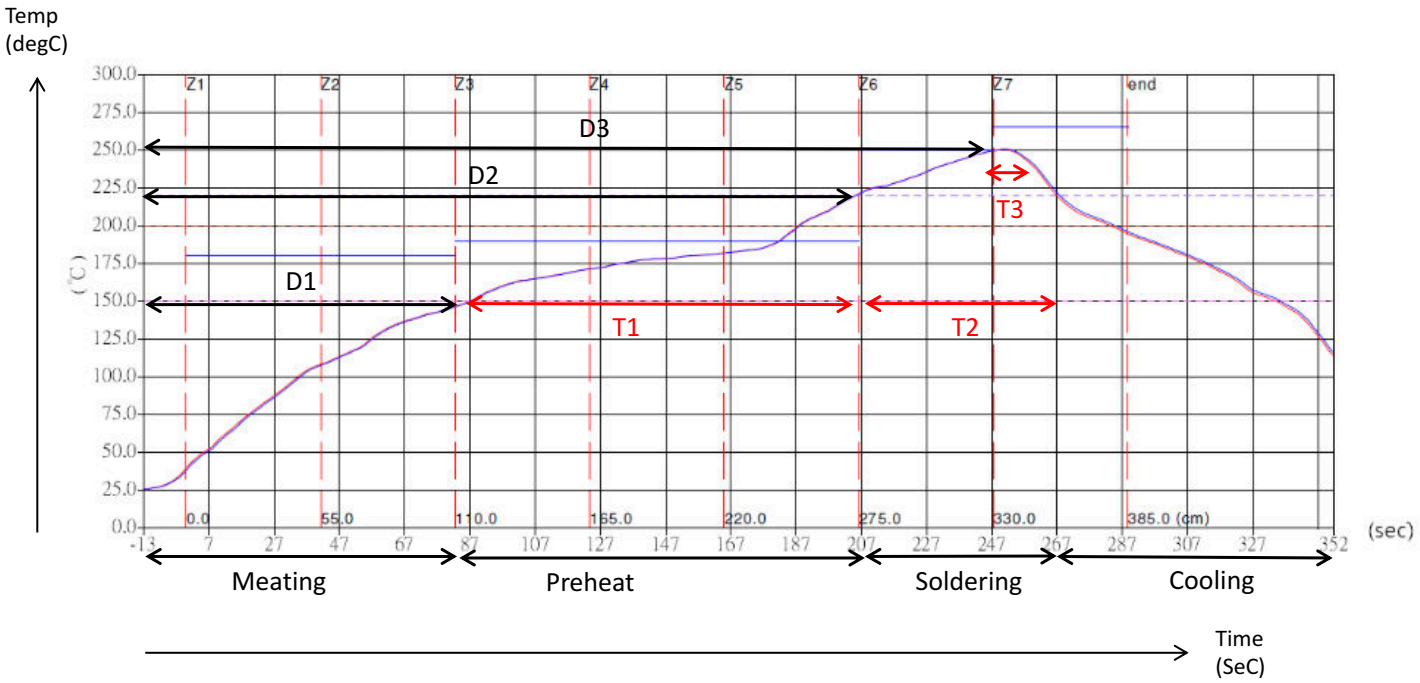

Figure 9-7. Reflow Profile for the WiLink 8 Module

Table 9-3 lists the temperature values for the profile shown in Figure 9-7.

Table 9-3. Temperature Values for Reflow Profile

ITEM	TEMPERATURE (°C)	TIME (s)
Preheat	D1 to approximately D2: 140 to 200	T1: 80 to approximately 120
Soldering	D2: 220	T2: 60 ±10
Peak temperature	D3: 250 maximum	T3: 10

Note

TI does not recommend the use of conformal coating or similar material on the WiLink 8 module. This coating can lead to localized stress on the WCSP solder connections inside the module and impact the device reliability. Care should be taken during module assembly process to the final PCB to avoid the presence of foreign material inside the module.

Copyright © 2025 Texas Instruments Incorporated

10 Device and Documentation Support

10.1 Device Support

10.1.1 Third-Party Products Disclaimer

TI'S PUBLICATION OF INFORMATION REGARDING THIRD-PARTY PRODUCTS OR SERVICES DOES NOT CONSTITUTE AN ENDORSEMENT REGARDING THE SUITABILITY OF SUCH PRODUCTS OR SERVICES OR A WARRANTY, REPRESENTATION OR ENDORSEMENT OF SUCH PRODUCTS OR SERVICES, EITHER ALONE OR IN COMBINATION WITH ANY TI PRODUCT OR SERVICE.

10.1.2 Development Support

TI offers an extensive line of development tools, including tools to evaluate the performance of the processors, generate code, develop algorithm implementations, and fully integrate and debug software and hardware modules.

10.1.2.1 Tools and Software

For a complete listing of development-support tools, visit the Texas Instruments WL18xx Wiki. For information on pricing and availability, contact the nearest TI field sales office or authorized distributor.

Design Kits and Evaluation Modules

AM335x EVM (TMDXEVM3358)	The AM335x EVM enables developers to immediately evaluate the AM335x processor family (AM3351, AM3352, AM3354, AM3356, and AM3358) and begin building applications, such as portable navigation, portable gaming, and home and building automation.
AM437x Evaluation Module (TMDSEVM437X)	The AM437x EVM enables developers to immediately evaluate the AM437x processor family (AM4376, AM4377, AM4378, and AM437) and begin building applications, such as portable navigation, patient monitoring, home and building automation, barcode scanners, and portable data terminals.
BeagleBone Black Development Board (BEAGLEBK)	BeagleBone Black is a low-cost, open source, community-supported development platform for Arm Cortex-A8 processor developers and hobbyists. Boot Linux in under 10 seconds and get started on Sitara™ AM335x Arm Cortex-A8 processor development in less than 5 minutes using just a single USB cable.
WiLink 8 Module 2.4 GHz Wi-Fi + Bluetooth COM8 EVM (WL1835MODCOM8B)	The WL1835MODCOM8 Kit for Sitara EVMs easily enables customers to add Wi-Fi and Bluetooth technology (WL183x module only) to embedded applications based on TI's Sitara microprocessors. TI's WiLink 8 Wi-Fi + Bluetooth modules are precertified and offer high throughput and extended range along with Wi-Fi and Bluetooth coexistence (WL183x modules only) in a power-optimized design. Drivers for the Linux and Android high-level operating systems (HLOSs) are available free of charge from TI for the Sitara AM335x microprocessor (Linux and Android version restrictions apply). Note: The WL1835MODCOM8 EVM is one of the two evaluation boards for the TI WiLink 8 combo module family. For designs requiring performance in the 5-GHz band and extended temperature range, see the WL1837MODCOM8I EVM.
WL18XXCOM82SDMMC Adapter Board	The WiLink SDIO board is an SDMMC adapter board and an easy-to-use connector between the WiLink COM8 EVM (WL1837MODCOM8i and WL1835MODCOM8B) and a generic SD/MMC card slot on a host processor EVM. The adapter card enables the WiLink Wi-Fi module to operate over SDIO and provides a UART connection for Bluetooth technology over an FPC connector or wire cables. In addition, the adapter is a standalone evaluation platform using TI wireless PC debug tools for any WiLink module or chip

Copyright © 2025 Texas Instruments Incorporated

solution with a PCB 100-pin edge connector. This board is designed for use with various platforms such as the TI Sitara AM335 and AM437.

TI Reference Designs

Find reference designs leveraging the best in TI technology to solve your system-level challenges.

TI WiLink 8 Wi-Fi/Bluetooth/ Bluetooth Smart Audio Multi-Room Cape Reference Design (TIDC-WL1837MOD-AUDIO-MULTIROOM-CAPE)	The TI WiLink 8 WL1837MOD audio cape is a wireless multi-room audio reference design used with BeagleBone Black featuring the TI Sitara (AM335x). The WLAN capability of the WiLink 8 device to capture and register the precise arrival time of the connected AP beacon is used to achieve ultra-precise synchronization between multiple connected audio devices. The WiLink 8 module (WL1837MOD) offers an integrated Wi-Fi/Bluetooth/Bluetooth Smart solution featuring 2.4GHz MIMO and antenna diversity on the 5GHz band. The WiLink 8 module offers a best-in-class audio solution featuring multi-room, Airplay® receiver, full audio stack streaming, support for online music services, and much more. This reference design enables customers to design their own audio boards with Wi-Fi/Bluetooth/Bluetooth Smart connectivity from our WiLink 8 module (WL1837MOD) and evaluate audio multi-room software.
2.4-GHz Wi-Fi + Bluetooth Certified Antenna Design on WiLink 1835 Module (TIDC-WL1835MODCOM8B)	The WiLink 1835 Module Antenna reference design combines the functionalities of the WiLink 8 module with a built-in antenna on a single board, implementing the module in the way the module is certified. Customers can thus evaluate the performance of the module through embedded applications, such as home automation and the Internet of Things that make use of both Wi-Fi and Bluetooth/Bluetooth Low Energy functionalities found on the WiLink 1835 module. This antenna design is the same layout used during module certification, allowing customers to avoid repeated certification when creating their specific applications.
Smart Home and Energy Gateway Reference Design (TIEP-SMART-ENERGY-GATEWAY)	The Smart Home and Energy Gateway reference design provides an example implementation for measurement, management, and communication of energy systems for smart homes and buildings. This example design is a bridge between different communication interfaces, such as Wi-Fi, Ethernet, Zigbee, or Bluetooth, that are commonly found in residential and commercial buildings. Because objects in homes and buildings are becoming more and more connected and no single RF standard dominates the market, the gateway design must be flexible to accommodate different RF standards. This example gateway addresses the problem by supporting existing legacy RF standards (Wi-Fi, Bluetooth) and newer RF standards (Zigbee® and BLE).
Streaming Audio Reference Design (TIDEP0009)	The TIDEP0009 Streaming Audio reference design minimizes design time for customers by offering small form factor hardware and major software components, including streaming protocols and Internet radio services. With this reference design, TI offers a quick and easy transition path to the AM335x and WiLink 8 platform solution. This proven combination solution provides key advantages in this market category that help bring your products to the next level.

Software

WiLink 8 Wi-Fi Driver for Linux OS (WILINK8-WIFI-NLCP)	The NLCP package contains the install package, pre-compiled object, and source of the TI Linux Open-Source Wi-Fi image to easily upgrade the default LINUX EZSDK release with the TI WiLink family NLCP Wi-Fi driver. The software is built with Linaro GCC 4.7 and can be added to Linux Software Development Kits (SDKs) that use a similar toolchain on other platforms.

Copyright © 2025 Texas Instruments Incorporated

Android Development Kit for Sitara Microprocessors (ANDROIDSDK-SITARA)	Although originally designed for mobile handsets, the Android Operating System offers designers of embedded applications the ability to easily add a high-level OS to their product. Developed in association with Google, Android delivers a complete operating system that is ready for integration and production today.
Linux EZ Software Development Kit (EZSDK) for Sitara Processors (LINUXEZSDK-SITARA)	Linux SDKs provide Sitara developers with an easy setup and quick out-of-box experience that is specific to and highlights the features of TI's Arm processors. Launching demos, benchmarks, and applications is a snap with the included graphical user interface. The Sitara Linux SDK also allows developers to quickly start development of their own applications and easily add them to the application launcher, which can be customized by the developer.
TI Dual-Mode Bluetooth Stack (TIBLUETOOTHSTACK-SDK)	TI's dual-mode Bluetooth stack enables Bluetooth + Bluetooth Low Energy and is comprised of single-mode and dual-mode offerings implementing the Bluetooth 4.0 specification. The Bluetooth stack is fully Bluetooth Special Interest Group (SIG) qualified, certified, and royalty-free, provides simple command line sample applications to speed development, and has MFI capability on request.
Bluetooth Service Pack for WL18xx (WL18XX-BT-SP)	The Bluetooth service pack is composed of the following four files: BTS file (TIInit_11.8.32.bts), ILI file (TIInit_11.8.32.ili), XML (TIInit_11.8.32.xml), Release Notes Document, and License Agreement Note.
TI Bluetooth Linux Add-On for AM335x EVM, AM437x EVM and BeagleBone with WL18xx and CC256x (TI-BT-STACK-LINUX-ADDON)	The Bluetooth Linux Add-On package contains the install package, pre-compiled object, and source of the TI Bluetooth Stack and Platform Manager to easily upgrade the default LINUX EZSDK Binary on a AM437x EVM, AM335x EVM, or BeagleBone. The software is built with Linaro GCC 4.7 and can be added to Linux SDKs that use a similar toolchain on other platforms. The Bluetooth stack is fully qualified (QDID 69886 and QDID 69887), provides simple command line sample applications to speed development, and has MFI capability on request.
WiLink Wireless Tools for WL18XX Modules (WILINK-BT_WIFI-WIRELESS_TOOLS)	The WiLink Wireless Tools package includes the following applications: WLAN Real-Time Tuning Tool (RTTT), Bluetooth Logger, WLAN gLogger, Link Quality Monitor (LQM), HCITester Tool (BTSout, BTSTransform, and ScriptPad). The applications provide all of the capabilities required to debug and monitor WiLink WLAN/Bluetooth/Bluetooth Low Energy firmware with a host, perform RF validation tests, run pretest for regulatory certification testing, and debug hardware and software platform integration issues.

Development Tools

WiLink 8 Proprietary Wi-Fi Driver – QNX, WinCE, Nucleus RTOS Baseline (WILINK8-WIFI-WAPI-MCP8, WILINK8-WIFI-MCP8, WILINK8-WIFI-SIGMA-MCP8)	The MCP package contains the install package, precompiled object, and source of the proprietary Wi-Fi driver - QNX, Nucleus, WinCE, as well as ThreadX, FreeRTOS, µC, MQX, RTX, and uITRON RTOS baseline image to easily integrate the TI WiLink Wi-Fi drivers. The integration is supported through third-party vendors. The WAPI package provides the WPA Supplicant patch to support WAPI security protocol. The Sigma package provides the required APIs for WL8 code to support automated Sigma certification testing.

10.1.3 Device Support Nomenclature

To designate the stages in the product development cycle, TI assigns prefixes to the part numbers. These prefixes represent evolutionary stages of product development from engineering prototypes through fully qualified production devices.

Copyright © 2025 Texas Instruments Incorporated

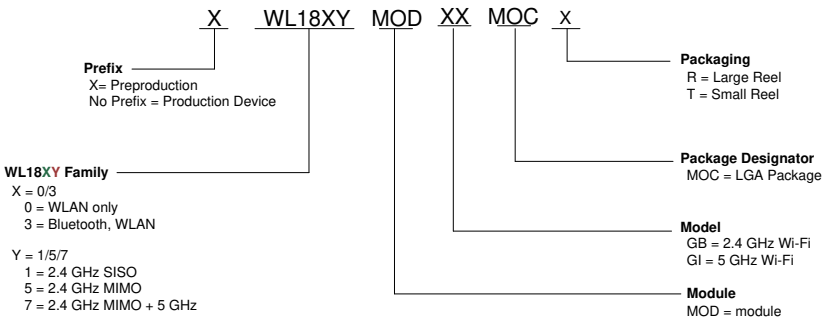

Figure 10-1. Device Nomenclature

X Experimental, preproduction, sample or prototype device. Device may not meet all product qualification conditions and may not fully comply with TI specifications. Experimental/Prototype devices are shipped against the following disclaimer: “This product is still in development and is intended for internal evaluation purposes.” Notwithstanding any provision to the contrary, TI makes no warranty expressed, implied, or statutory, including any implied warranty of merchantability of fitness for a specific purpose, of this device.

null Device is qualified and released to production. TI’s standard warranty applies to production devices.

10.2 Support Resources

TI E2E™ support forums are an engineer's go-to source for fast, verified answers and design help — straight from the experts. Search existing answers or ask your own question to get the quick design help you need.

Linked content is provided "AS IS" by the respective contributors. They do not constitute TI specifications and do not necessarily reflect TI's views; see TI's Terms of Use.

10.3 Trademarks

WiLink™ and TI E2E™ are trademarks of Texas Instruments.
Android™ is a trademark of Google, Inc.
IEEE Std 802.11™ is a trademark of IEEE.
Sitara™ is a trademark of TI.
Wi-Fi® is a registered trademark of Wi-Fi Alliance.
Bluetooth® is a registered trademark of Bluetooth SIG.
Linux® is a registered trademark of Linus Torvalds.
Arm® is a registered trademark of Arm Limited.
Airplay® is a registered trademark of Apple Inc.
Zigbee® is a registered trademark of ZigBee Alliance.
All trademarks are the property of their respective owners.

10.4 Electrostatic Discharge Caution



This integrated circuit can be damaged by ESD. Texas Instruments recommends that all integrated circuits be handled with appropriate precautions. Failure to observe proper handling and installation procedures can cause damage.

ESD damage can range from subtle performance degradation to complete device failure. Precision integrated circuits may be more susceptible to damage because very small parametric changes could cause the device not to meet its published specifications.

10.5 Glossary

TI Glossary	This glossary lists and explains terms, acronyms, and definitions.

Copyright © 2025 Texas Instruments Incorporated

11 Revision History

NOTE: Page numbers for previous revisions may differ from page numbers in the current version.

Changes from November 6, 2023 to January 1, 2025 (from Revision K (November 2023) to Revision L (May 2025)) **Page**

- Updated functional block diagram and added certification information.....2
- Changed Bluetooth LE sensitivity typical value from –93.2.....18
- Added "(TYP)" to Specification column in WLAN Performance Parameters.....28
- Changed calibration performance from 5 seconds to 5 minutes *WLAN Performance Parameters* 28

Changes from April 26, 2021 to November 6, 2023 (from Revision J (April 2021) to Revision K (November 2023)) **Page**

- Updated functional block diagram and added certification information.....2

Copyright © 2025 Texas Instruments Incorporated

12 Mechanical, Packaging, and Orderable Information

12.1 TI Module Mechanical Outline

Figure 12-1 shows the mechanical outline for the device.

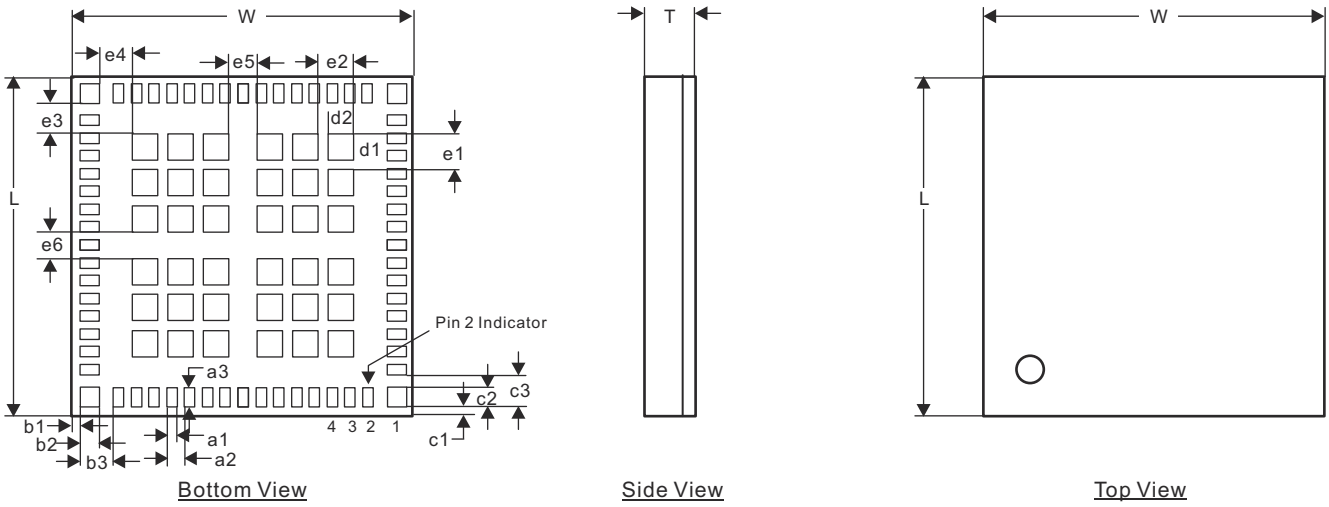

Figure 12-1. TI Module Mechanical Outline

Table 12-1 lists the dimensions for the mechanical outline of the device.

Note

The TI module weighs 0.684 g typical.

Table 12-1. Dimensions for TI Module Mechanical Outline

MARKING	MIN (mm)	NOM (mm)	MAX (mm)	MARKING	MIN (mm)	NOM (mm)	MAX (mm)
L (body size)	13.20	13.30	13.40	c2	0.65	0.75	0.85
W (body size)	13.30	13.40	13.50	c3	1.15	1.25	1.35
T (thickness)	1.80	1.90	2.00	d1	0.90	1.00	1.10
a1	0.30	0.40	0.50	d2	0.90	1.00	1.10
a2	0.60	0.70	0.80	e1	1.30	1.40	1.50
a3	0.65	0.75	0.85	e2	1.30	1.40	1.50
b1	0.20	0.30	0.40	e3	1.15	1.25	1.35
b2	0.65	0.75	0.85	e4	1.20	1.30	1.40
b3	1.20	1.30	1.40	e5	1.00	1.10	1.20
c1	0.20	0.30	0.40	e6	1.00	1.10	1.20

12.2 Tape and Reel Information

Emboss taping specification for MOC 100 pin.

Copyright © 2025 Texas Instruments Incorporated

12.2.1 Tape and Reel Specification

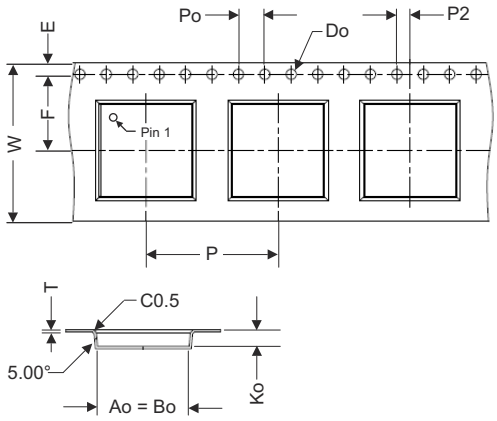

Figure 12-2. Tape Specification

Table 12-2. Dimensions for Tape Specification

ITEM	W	E	F	P	Po	P2	Do	T	Ao	Bo	Ko
DIMENSION (mm)	24.00 (±0.30)	1.75 (±0.10)	11.50 (±0.10)	20.00 (±0.10)	4.00 (±0.10)	2.00 (±0.10)	2.00 (±0.10)	0.35 (±0.05)	13.80 (±0.10)	13.80 (±0.10)	2.50 (±0.10)

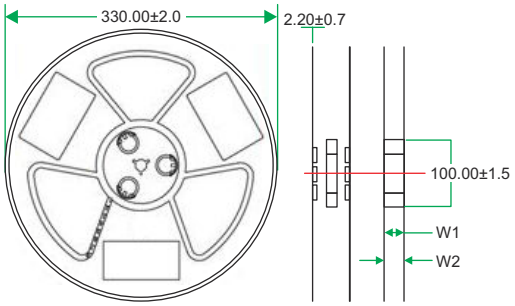

Figure 12-3. Reel Specification

Table 12-3. Dimensions for Reel Specification

ITEM	W1	W2
DIMENSION (mm)	24.4 (+1.5, –0.5)	30.4 (maximum)

Copyright © 2025 Texas Instruments Incorporated

12.2.2 Packing Specification

12.2.2.1 Reel Box

The reel is packed in a moisture barrier bag fastened by heat-sealing. Each moisture-barrier bag is packed into a reel box, as shown in Figure 12-4.

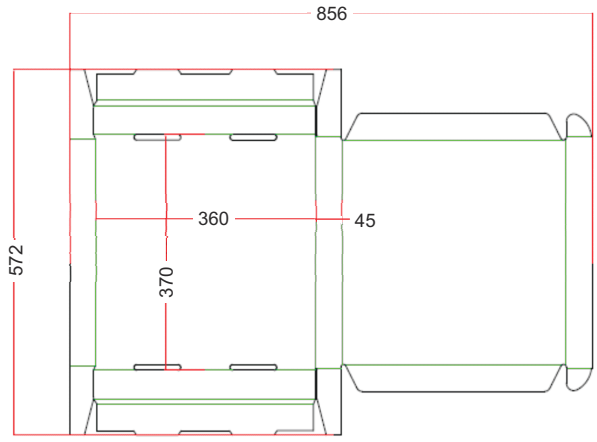

Figure 12-4. Reel Box

The reel box is made of corrugated fiberboard.

12.2.2.2 Shipping Box

Figure 12-5 shows a typical shipping box. If the shipping box has excess space, filler (such as cushion) is added.

Note

The size of the shipping box may vary depending on the number of reel boxes packed.

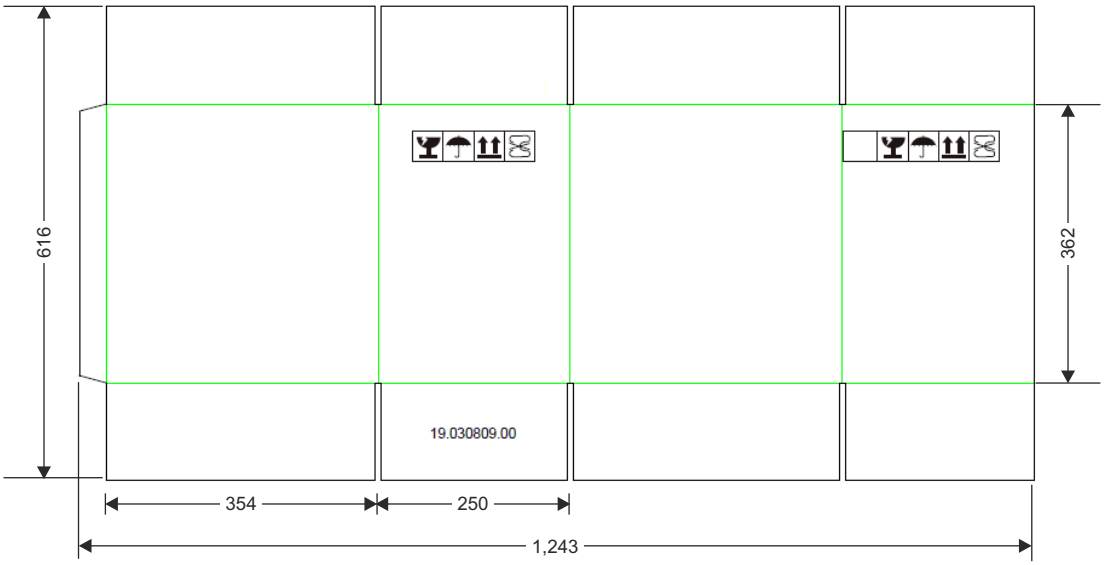

Figure 12-5. Shipping Box

The shipping box is made of corrugated fiberboard.

Copyright © 2025 Texas Instruments Incorporated

12.3 Packaging Information

The following pages include mechanical, packaging, and orderable information. This information is the most current data available for the designated devices. This data is subject to change without notice and revision of this document. For browser-based versions of this data sheet, refer to the left-hand navigation.

Copyright © 2025 Texas Instruments Incorporated

12.3.1 PACKAGE OPTION ADDENDUM

Orderable Device	Status(1)	Package Type	Package Drawing	Pins	Package Qty	Eco Plan(2)	Lead/Ball Finish	MSL Peak Temp (°C)(3)	Op Temp (°C)
WL1807MODGIMOCR	ACTIVE	QFM	MOC	100	1200	Green	NiPdAu	250	–40 to 85
WL1807MODGIMOCT	ACTIVE	QFM	MOC	100	250	Green	NiPdAu	250	–40 to 85
WL1837MODGIMOCR	ACTIVE	QFM	MOC	100	1200	Green	NiPdAu	250	–40 to 85
WL1837MODGIMOCT	ACTIVE	QFM	MOC	100	250	Green	NiPdAu	250	–40 to 85

(1) The marketing status values are defined as follows:
ACTIVE: Product device recommended for new designs.
LIFEBUY: TI has announced that the device will be discontinued, and a lifetime-buy period is in effect.
NRND: Not recommended for new designs. Device is in production to support existing customers, but TI does not recommend using this part in a new design.
PRE_PROD Unannounced device, not in production, not available for mass market, nor on the web, samples not available.
PREVIEW: Device has been announced but is not in production. Samples may or may not be available.
OBSOLETE: TI has discontinued the production of the device.

(2) RoHS Compliance: This product has an RoHS exemption for one or more subcomponent(s). The product is otherwise considered Pb-Free (RoHS compatible) as defined above.

(3) MSL, Peak Temp. -- The Moisture Sensitivity Level rating according to the JEDEC industry standard classifications, and peak solder temperature.

Important Information and Disclaimer: The information provided on this page represents TI's knowledge and belief as of the date that it is provided. TI bases its knowledge and belief on information provided by third parties, and makes no representation or warranty as to the accuracy of such information. Efforts are underway to better integrate information from third parties. TI has taken and continues to take reasonable steps to provide representative and accurate information but may not have conducted destructive testing or chemical analysis on incoming materials and chemicals. TI and TI suppliers consider certain information to be proprietary, and thus CAS numbers and other limited information may not be available for release.

Copyright © 2025 Texas Instruments Incorporated

TAPE AND REEL INFORMATION

REEL DIMENSIONS

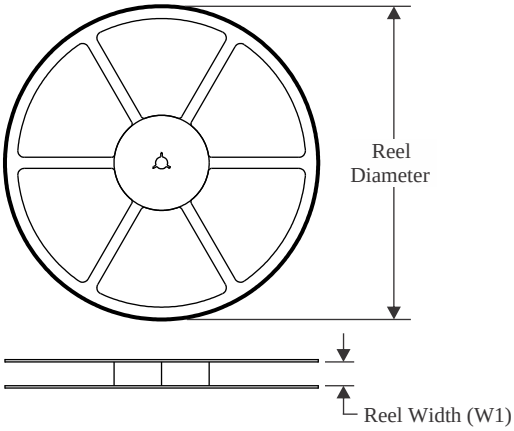

TAPE DIMENSIONS

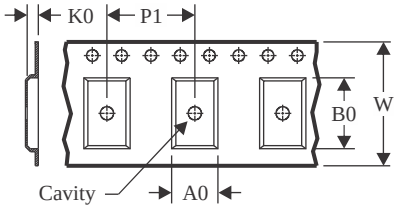

A0	Dimension designed to accommodate the component width
B0	Dimension designed to accommodate the component length
K0	Dimension designed to accommodate the component thickness
W	Overall width of the carrier tape
P1	Pitch between successive cavity centers

QUADRANT ASSIGNMENTS FOR PIN 1 ORIENTATION IN TAPE

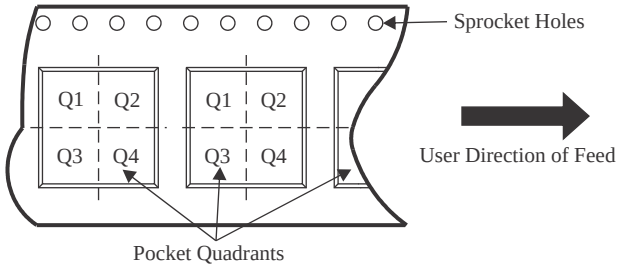

*All dimensions are nominal

Device	Package Type	Package Drawing	Pins	SPQ	Reel Diameter (mm)	Reel Width W1 (mm)	A0 (mm)	B0 (mm)	K0 (mm)	P1 (mm)	W (mm)	Pin1 Quadrant
WL1807MODGIMOCR	QFM	MOC	100	1200	330.0	24.4	13.8	13.8	2.5	20.0	24.0	Q1
WL1807MODGIMOCT	QFM	MOC	100	250	330.0	24.4	13.8	13.8	2.5	20.0	24.0	Q1
WL1837MODGIMOCR	QFM	MOC	100	1200	330.0	24.4	13.8	13.8	2.5	20.0	24.0	Q1
WL1837MODGIMOCT	QFM	MOC	100	250	330.0	24.4	13.8	13.8	2.5	20.0	24.0	Q1

TAPE AND REEL BOX DIMENSIONS

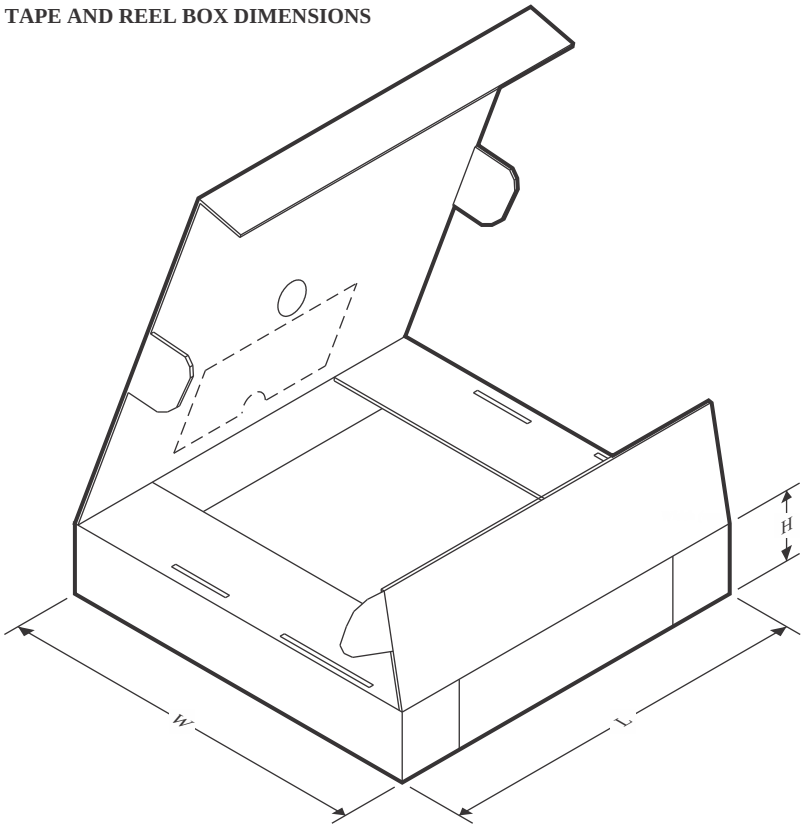

*All dimensions are nominal

Device	Package Type	Package Drawing	Pins	SPQ	Length (mm)	Width (mm)	Height (mm)
WL1807MODGIMOCR	QFM	MOC	100	1200	367.0	367.0	55.0
WL1807MODGIMOCT	QFM	MOC	100	250	367.0	367.0	55.0
WL1837MODGIMOCR	QFM	MOC	100	1200	367.0	367.0	55.0
WL1837MODGIMOCT	QFM	MOC	100	250	367.0	367.0	55.0

PACKAGE OUTLINE

MOC0100A

QFM - 2.0 mm max height

QUAD FLAT MODULE

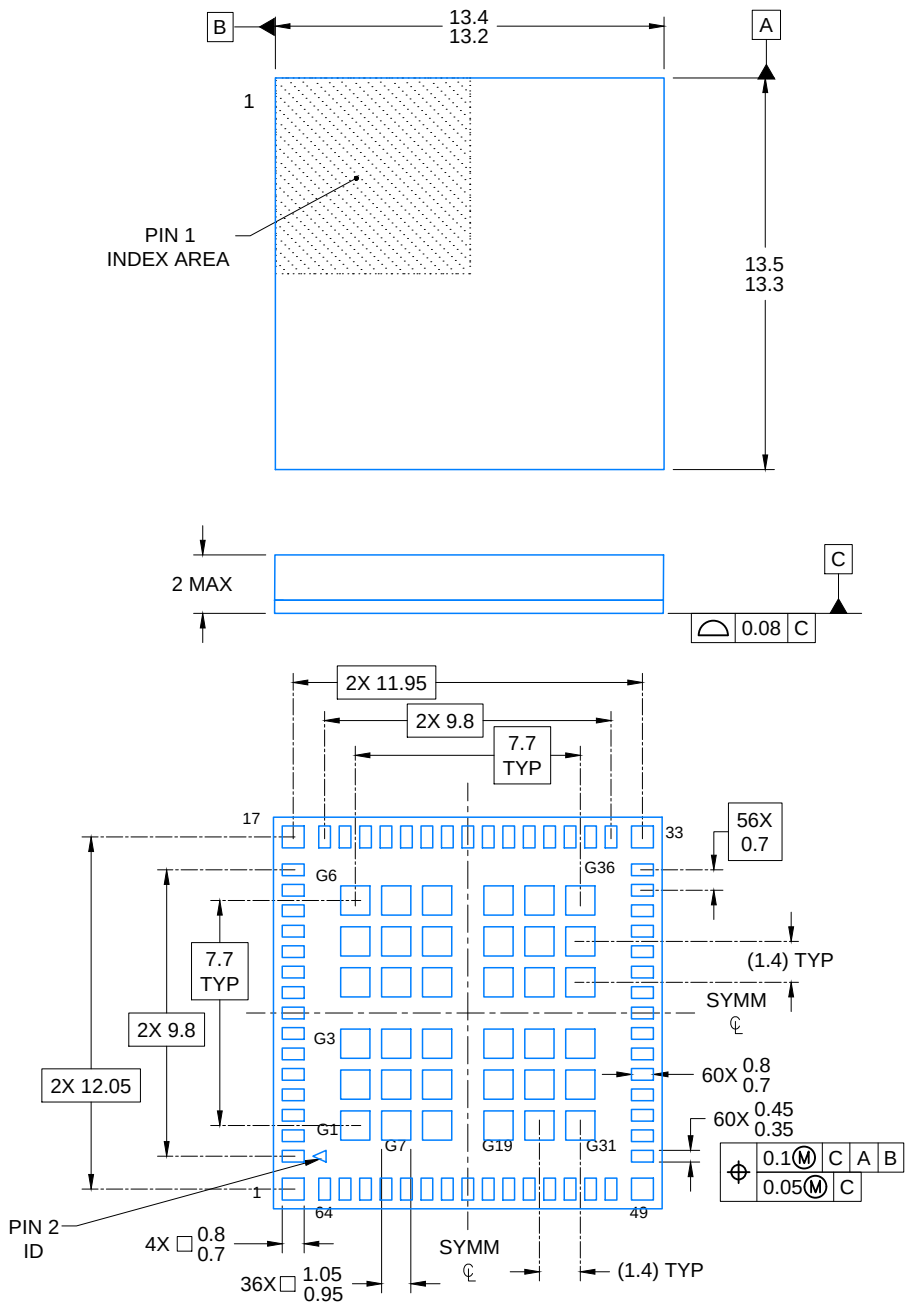

NOTES:

1. All linear dimensions are in millimeters. Any dimensions in parenthesis are for reference only. Dimensioning and tolerancing per ASME Y14.5M.
2. This drawing is subject to change without notice.
3. The package thermal pads must be soldered to the printed circuit board for thermal and mechanical performance.

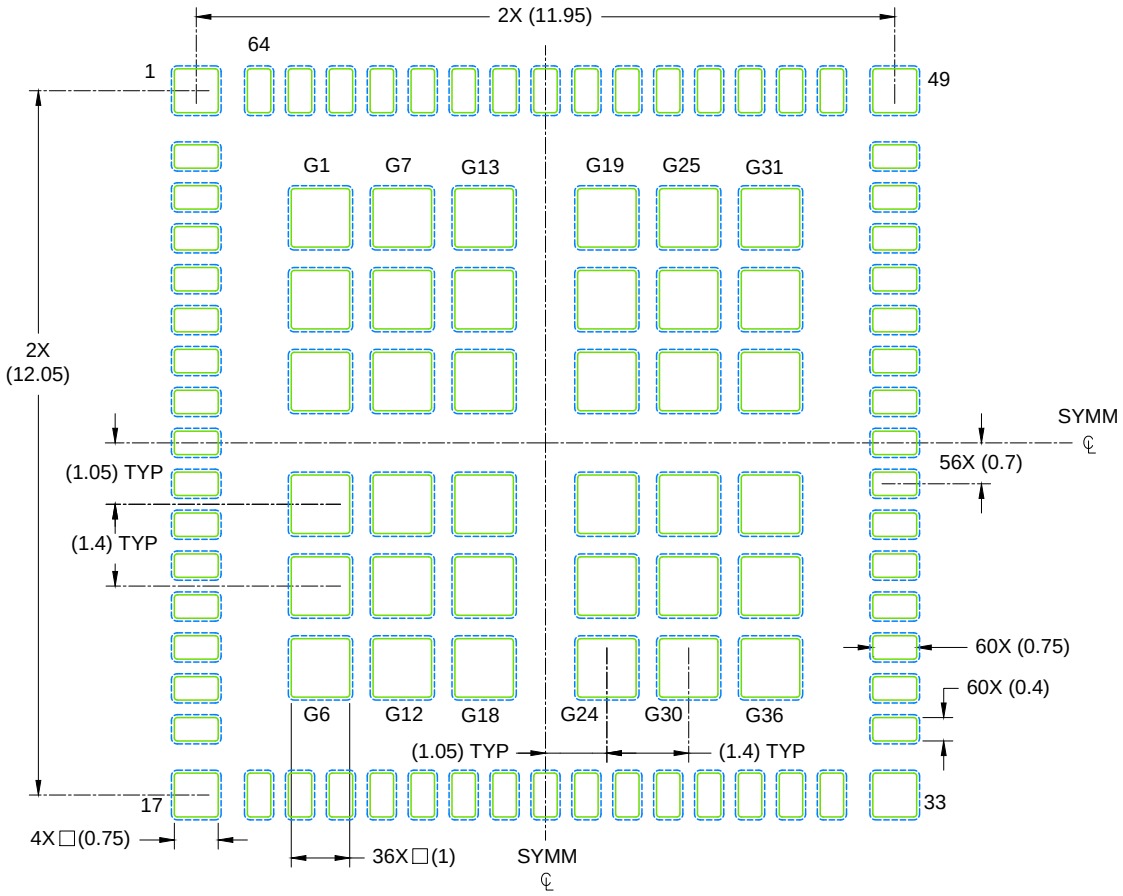

LAND PATTERN EXAMPLE

SCALE: 8X

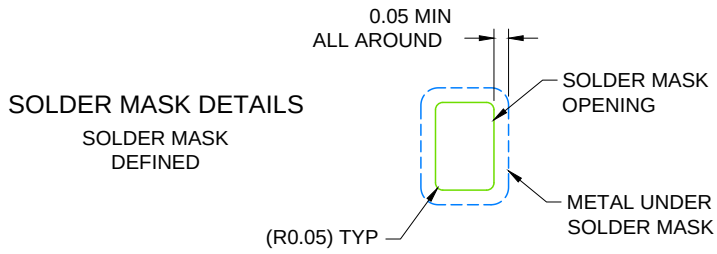

4221006/B 10/2016

NOTES: (continued)

4. This package is designed to be soldered to thermal pads on the board. For more information, see Texas Instruments literature number SLUA271 (www.ti.com/lit/slua271) .
5. Solder mask tolerances between and around signal pads can vary based on board fabrication site.
6. Vias are optional depending on application, refer to device data sheet. If any vias are implemented, it is recommended that vias under paste be filled, plugged or tented.

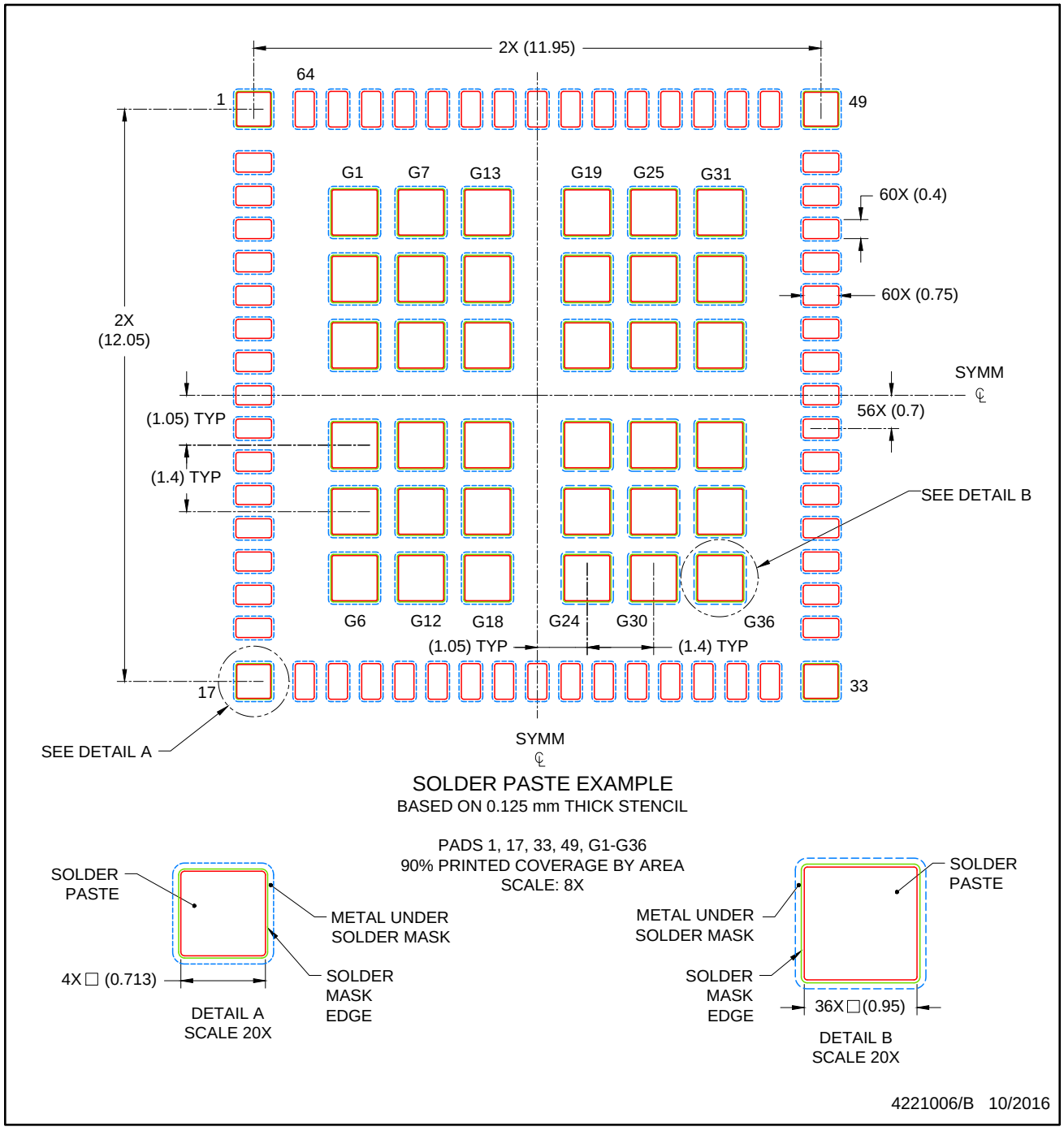

NOTES: (continued)

7. Laser cutting apertures with trapezoidal walls and rounded corners may offer better paste release. IPC-7525 may have alternate design recommendations..

IMPORTANT NOTICE AND DISCLAIMER

TI PROVIDES TECHNICAL AND RELIABILITY DATA (INCLUDING DATA SHEETS), DESIGN RESOURCES (INCLUDING REFERENCE DESIGNS), APPLICATION OR OTHER DESIGN ADVICE, WEB TOOLS, SAFETY INFORMATION, AND OTHER RESOURCES “AS IS” AND WITH ALL FAULTS, AND DISCLAIMS ALL WARRANTIES, EXPRESS AND IMPLIED, INCLUDING WITHOUT LIMITATION ANY IMPLIED WARRANTIES OF MERCHANTABILITY, FITNESS FOR A PARTICULAR PURPOSE OR NON-INFRINGEMENT OF THIRD PARTY INTELLECTUAL PROPERTY RIGHTS.

These resources are intended for skilled developers designing with TI products. You are solely responsible for (1) selecting the appropriate TI products for your application, (2) designing, validating and testing your application, and (3) ensuring your application meets applicable standards, and any other safety, security, regulatory or other requirements.

These resources are subject to change without notice. TI grants you permission to use these resources only for development of an application that uses the TI products described in the resource. Other reproduction and display of these resources is prohibited. No license is granted to any other TI intellectual property right or to any third party intellectual property right. TI disclaims responsibility for, and you will fully indemnify TI and its representatives against, any claims, damages, costs, losses, and liabilities arising out of your use of these resources.

TI’s products are provided subject to TI’s Terms of Sale or other applicable terms available either on ti.com or provided in conjunction with such TI products. TI’s provision of these resources does not expand or otherwise alter TI’s applicable warranties or warranty disclaimers for TI products.

TI objects to and rejects any additional or different terms you may have proposed.

Mailing Address: Texas Instruments, Post Office Box 655303, Dallas, Texas 75265
Copyright © 2025, Texas Instruments Incorporated