XC6241 Series

ETR03122-001

Ultra-Low Supply Current 0.6μA High Speed Voltage Regulators

☆Green Operation Compatible

■GENERAL DESCRIPTION

The XC6241 series are CMOS process high-speed voltage regulator ICs with low supply current, high accuracy, and high ripple rejection. The output voltage is fixed internally and can be set in the range of 1.2V to 5.0V.

It has a Green Operation (GO) function that achieves both high-speed operation and low supply current, and switches automatically between high speed (HS) mode and power save (PS) mode according to the output current.
At light load, high efficiency is realized by operating in PS mode with low supply current, and at heavy load, high-speed operation is enabled by operating in HS mode. This is ideal for applications that require both low supply current and high-speed operation.

The lineup package of the small and thin USPQ-4B05 and general-purpose SSOT-24 are available for various applications. Low ESR capacitors such as ceramic capacitors can be used at the output capacitors.

■APPLICATIONS

- Smart meters
- Smart cards
- Wearable devices
- Remote controllers

■FEATURES

Low Supply Current	:	0.6μA (PS)
Accuracy	:	±1.0% (V_{OUT}≧2.00V) ±20mV (V_{OUT}≦1.95V)
Operating Voltage Range	:	1.6V ~ 6.0V
Output Voltage Range	:	1.2V ~ 5.0V (0.05V increments)
Maximum Output Current	:	150mA
High Ripple Rejection	:	60dB@1kHz (HS)
Function	:	Green Operation, CE function: “H” Active C_L Discharge (A TYPE)
Protective Function	:	Current Limit 250mA (TYP.) Short-Circuit Current 15mA (TYP.)
Output Capacitor	:	Ceramic capacitor
Operating Ambient Temperature	:	-40℃ ~ 105℃
Packages	:	USPQ-4B05 (1.0 x 1.0 x h0.33mm) SSOT-24 (2.0 x 2.1 x h1.1mm)
Environmentally Friendly	:	EU RoHS Compliant, Pb Free

■TYPICAL APPLICATION CIRCUIT

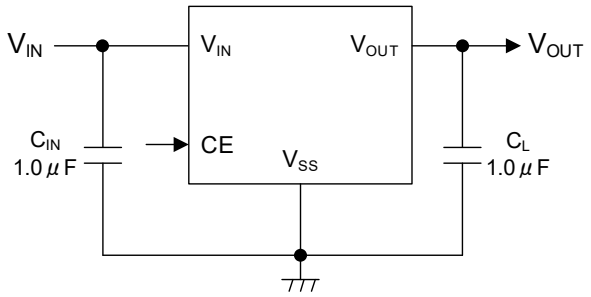

■ TYPICAL PERFORMANCE CHARACTERISTICS

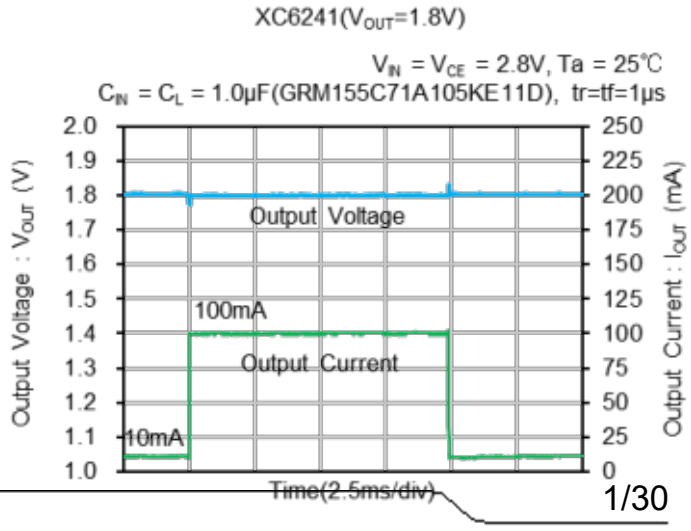

■BLOCK DIAGRAMS

A Type

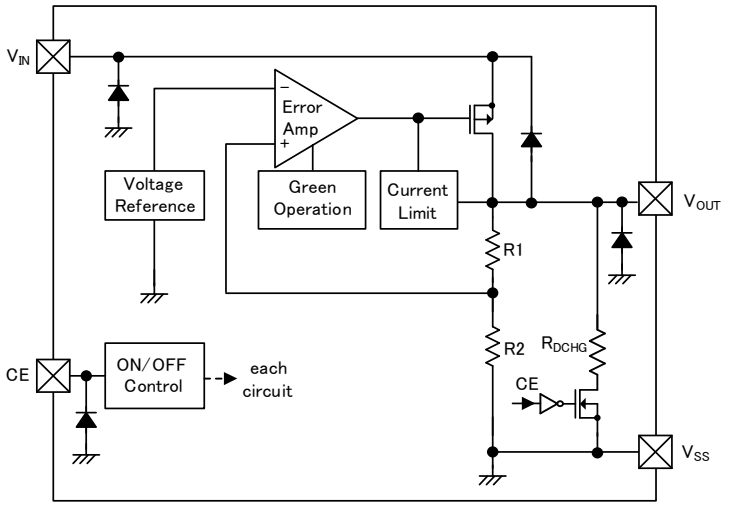

B Type

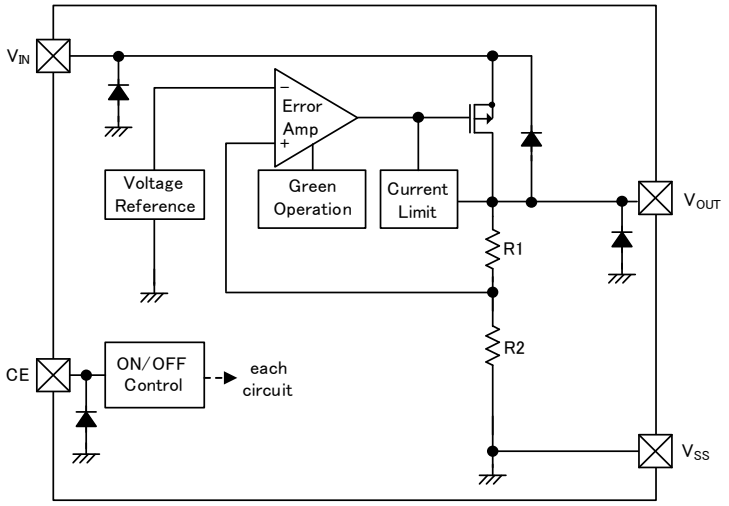

※Diodes inside the circuits are ESD protection diodes and parasitic diodes.

■PRODUCT CLASSIFICATION

●Ordering Information

XC6241①②③④⑤⑥-⑦(*1)

DESIGNATOR	ITEM	SYMBOL	DESCRIPTION
①	TYPE	A	With C_L auto-discharge function
		B	Without C_L auto-discharge function
②③	Output Voltage	12 ~ 50	e.g. 2.8V ②=2, ③=8
④	Output Voltage (the 2nd decimal place)	1	Output Voltage {x.x0V} e.g. 2.80V → ②=2, ③=8, ④=1
		B	Output Voltage {x.x5V} e.g. 2.85V → ②=2, ③=8, ④=B
⑤⑥-⑦	Packages (Order Unit)	9R-G (*1)	USPQ-4B05 (5,000pcs/Reel)
		NR-G (*1)	SSOT-24 (3,000pcs/Reel)

(*1) "-G" suffix denotes Halogen and Antimony free as well as being fully EU RoHS compliant.

■PIN CONFIGURATION

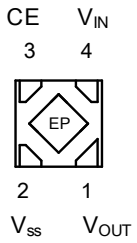

USPQ-4B05
(BOTTOM VIEW)

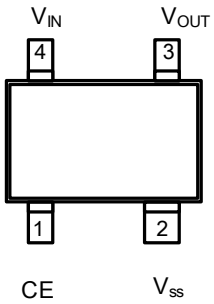

SSOT-24
(TOP VIEW)

■PIN ASSIGNMENT

PIN NUMBER		PIN NAME	FUNCTION
USPQ-4B05	SSOT-24		
1	3	V_{OUT}	Output
2	2	V_{SS}	Ground
3	1	CE	ON/OFF Control
4	4	V_{IN}	Power Input
5	-	EP	Exposed thermal pad. The Exposed pad must be connected to Vss(Pin2).

■FUNCTION CHART

PIN NAME	SIGNAL	STATUS
CE	H	Active
	L	Stand-by
	OPEN	Undefined state*

*Please do not leave the CE pin open. Each should have a certain voltage.

■ABSOLUTE MAXIMUM RATINGS

PARAMETER		SYMBOL	RATINGS	UNITS
V_{IN} Pin Voltage		V_{IN}	-0.3 ~ 6.5	V
V_{OUT} Pin Voltage		V_{OUT}	-0.3 ~ V_{IN} + 0.3 or 6.5 (*1)	V
CE Pin Voltage		V_{CE}	-0.3 ~ 6.5	V
Power Dissipation (Ta=25℃)	USPQ-4B05	Pd	550 (40mm x 40mm Standard board) (*2)	mW
	SSOT-24		680 (JESD51-7 board) (*2)	
Operating Ambient Temperature		Topr	-40 ~ 105	℃
Junction Temperature		Tj	-40 ~ 125	℃
Storage Temperature		Tstg	-55 ~ 125	℃

All voltages are described based on the V_{SS}.

(*1) The maximum rating corresponds to the lowest value between V_{IN}+0.3V or 6.5V.

(*2) The power dissipation figure shown is PCB mounted and is for reference only.
Please refer to PACKAGING INFORMATION for the mounting condition.

■RECOMMENDED OPERATING CONDITIONS

PARAMETER	SYMBOL	MIN.	TYP.	MAX.	UNITS
Input Voltage	V_{IN}	1.6	-	6.0	V
Output Current	I_{OUT}	0.0	-	150	mA
CE Pin Voltage	V_{CE}	0.0	-	6.0	V
Operating Ambient Temperature	Topr	-40	-	105	℃
Junction Temperature	Tj	-40	-	125	℃
Input Capacitor (Effective Value)	C_{IN}	1.0 (*1)	-	1000	μF
Output Capacitor (Effective Value)	C_L	1.0 (*1)	-	100	μF

All voltages are described based on the V_{SS}.

(*1) Some ceramic capacitors have an effective capacitance that is significantly lower than the nominal value due to the applied DC bias and ambient temperature.
For the input / output capacitance of this IC, use an appropriate ceramic capacitor according to the DC bias usage conditions (ambient temperature, input / output voltage) so that the effective capacitance value is equal to or higher than the recommended component.

■ELECTRICAL CHARACTERISTICS

Ta=25℃

PARAMETER	SYMBOL	CONDITIONS	MIN.	TYP.	MAX.	UNIT	CIRCUIT
Input Voltage	V_{IN}		1.6	-	6.0	V	①
Output Voltage	$V_{OUT(E)}$(*1)	$V_{OUT(T)}$≧2.00V I_{OUT}=10mA	$V_{OUT(T)}$ (*2) × 0.99	$V_{OUT(T)}$(*2)	$V_{OUT(T)}$ (*2) × 1.01	V	①
		$V_{OUT(T)}$≦1.95V I_{OUT} =10mA	$V_{OUT(T)}$ (*2) -0.02		$V_{OUT(T)}$ (*2) + 0.02		
Maximum Output Current	I_{OUTMAX}		150	-	-	mA	①
Load Regulation	ΔV_{OUT}	10mA≦I_{OUT}≦150mA	-	-	20	mV	①
		0.1mA≦I_{OUT}≦150mA	-	10	50		
Dropout Voltage	V_{dif}(*3)	I_{OUT} =150mA	-	E-1		mV	①
Supply Current	I_{SS}	I_{OUT} =0mA	-	0.6	0.9	μA	②
Stand-by Current	I_{STB}	V_{IN}=6.0V, V_{CE}=V_{SS}	-	0.01	0.1	μA	②
Line Regulation	ΔV_{OUT}/ (ΔV_{IN}・V_{OUT})	$V_{OUT(T)}$+0.5V≦V_{IN}≦6.0V I_{OUT}=30mA	-	±0.05	±0.20	%/V	①
Output Voltage Temperature Characteristics	ΔV_{OUT}/ (ΔTopr・V_{OUT})	I_{OUT} =10mA -40℃≦Topr≦105℃	-	±50	-	ppm/℃	①
Ripple Rejection	PSRR	V_{IN}=5.75V_{DC}+0.5Vp-p_{AC} 4.75V≦$V_{OUT(T)}$ V_{CE}=V_{IN}, I_{OUT}=30mA、f=1kHz	-	60	-	dB	④
		V_{IN}={$V_{OUT(T)}$+1.0}V_{DC}+0.5Vp-p_{AC}, $V_{OUT(T)}$≦4.7V V_{CE}=V_{IN}, I_{OUT}=30mA、f=1kHz					
Current Limit	I_{LIM}	V_{OUT} = $V_{OUT(E)}$ ×0.95	155	250	-	mA	①
Short-Circuit Current	I_{SHORT}	V_{OUT}=V_{SS}	-	15	-	mA	①
PS(*4) Switched Current	I_{GOR}	I_{OUT}: heavy to light load	0.5	-	-	mA	②
HS(*5) Switched Current	I_{GO}	I_{OUT}: light to heavy load	-	-	10	mA	②
CE "H" Level Voltage	V_{CEH}		1.2	-	6.0	V	③
CE "L" Level Voltage	V_{CEL}	V_{IN}=6.0V	V_{SS}	-	0.3	V	③
CE "H" Level Current	I_{CEH}	V_{IN}=V_{CE}=6.0V	-0.1	0.0	0.1	μA	③
CE "L" Level Current	I_{CEL}	V_{IN}=6.0V, V_{CE}=V_{SS}	-0.1	0.0	0.1	μA	③
C_L Auto-Discharge Resistance (Only A Type) (*6)	R_{DCHG}	V_{IN}=V_{OUT}=6.0V, V_{CE}=V_{SS}	-	280	-	Ω	①

Unless otherwise stated regarding input voltage conditions,
(V_{IN}=$V_{OUT(T)}$+1.0V), V_{CE}=V_{IN}, C_{IN} = 1.0uF, C_L = 1.0uF.

(*1) $V_{OUT(E)}$: Active output voltage value
(*2) $V_{OUT(T)}$: Set output voltage value
(*3) V_{dif} = {V_{IN1}-V_{OUT1}}
V_{IN1} : As input voltage is gradually reduced, the input voltage at which V_{OUT}1 is output.
V_{OUT1} : 98% of the output voltage when V_{IN} is input after stabilizing sufficiently at I_{OUT} {$V_{OUT(T)}$+1.0V}.
(*4) PS: Power save mode (Low current consumption operation)
(*5) HS: High speed mode (High speed operation)
(*6) For B type, the discharge resistance is in series with the block diagram R1 and R2.

■ELECTRICAL CHARACTERISTICS

●Voltage Chart

SYMBOL	E-1	
NOMINAL OUTPUT VOLTAGE (V)	DROPOUT VOLTAGE Vdif (mV) I_{OUT}=150mA	
$V_{OUT(T)}$	V_{dif}	
	TYP.	MAX
1.20	470	825
1.25		
1.30		
1.35		
1.40		
1.45		
1.50		
1.55		
1.60	315	550
1.65		
1.70		
1.75		
1.80		
1.85		
1.90		
1.95		
2.00	240	420
2.05		
2.10		
2.15		
2.20		
2.25		
2.30		
2.35		
2.40		
2.45		
2.50	200	325
2.55		
2.60		
2.65		
2.70		
2.75		
2.80		
2.85		
2.90		
2.95		
3.00	165	255
3.05		
3.10		
3.15		
3.20		
3.25		
3.30		
3.35		

SYMBOL	E-1	
NOMINAL OUTPUT VOLTAGE (V)	DROPOUT VOLTAGE Vdif (mV) I_{OUT}=150mA	
$V_{OUT(T)}$	V_{dif}	
	TYP.	MAX
3.40	165	255
3.45		
3.50		
3.55		
3.60		
3.65		
3.70		
3.75		
3.80		
3.85		
3.90		
3.95		
4.00		
4.05	130	235
4.10		
4.15		
4.20		
4.25		
4.30		
4.35		
4.40		
4.45		
4.50		
4.55		
4.60		
4.65		
4.70		
4.75		
4.80		
4.85		
4.90		
4.95		
5.00		

■TEST CIRCUITS

TEST CIRCUITS①

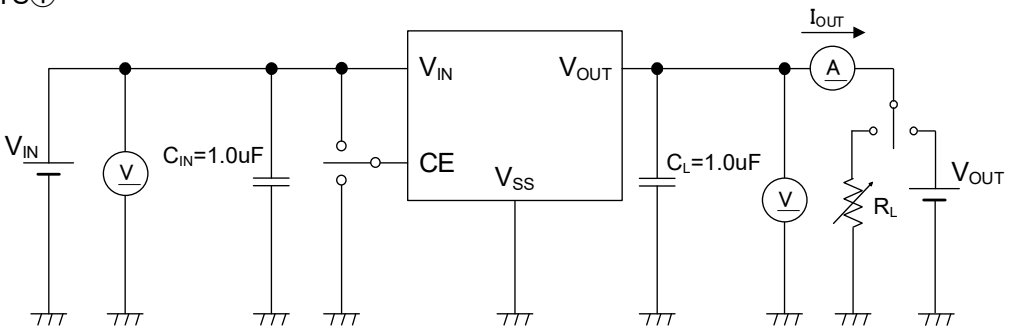

TEST CIRCUITS②

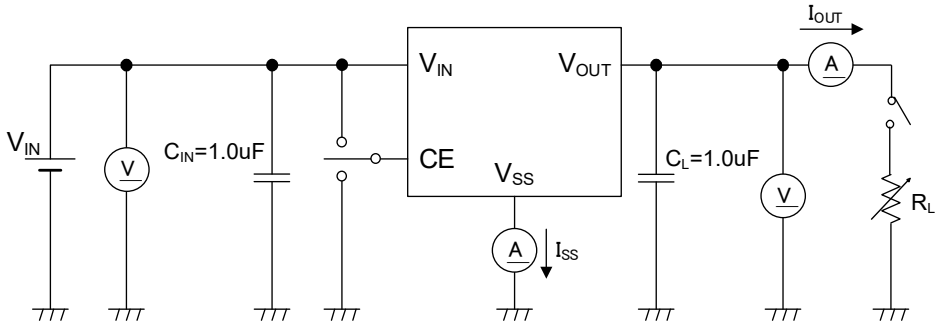

TEST CIRCUITS③

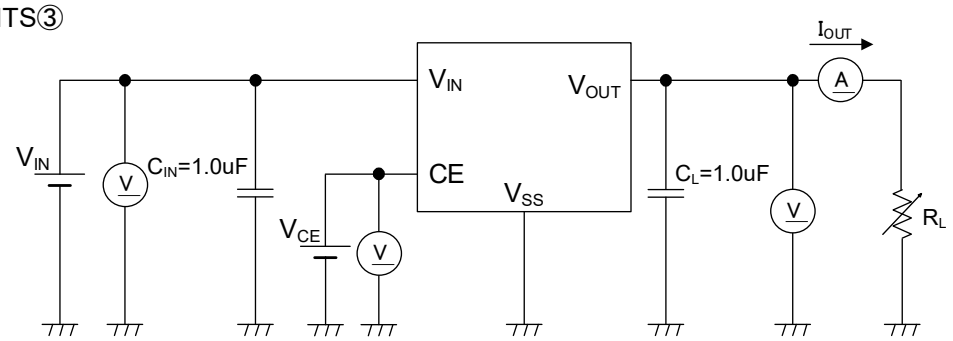

TEST CIRCUITS④

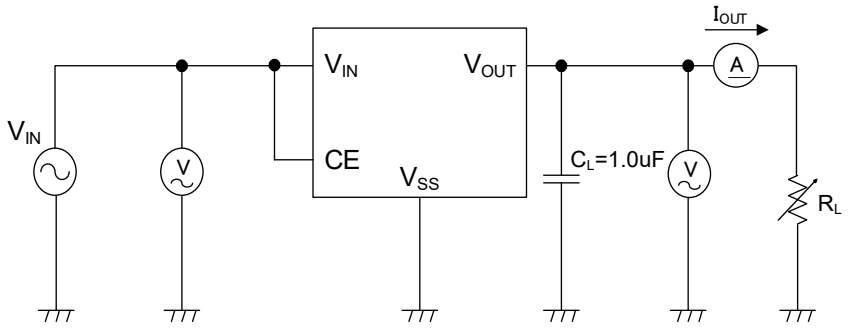

■TYPICAL APPLICATION CIRCUIT

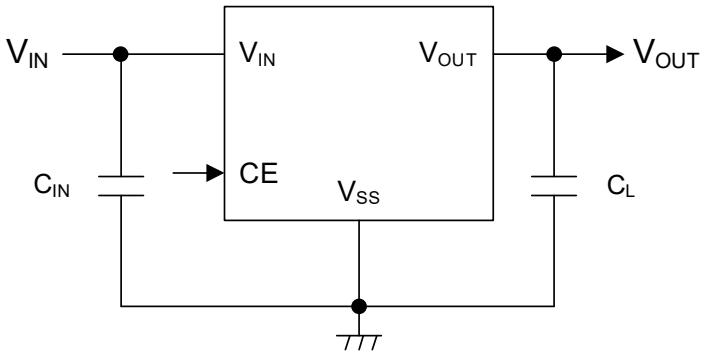

【Typical Examples】(*1)

	MANUFACTURER	PRODUCT NUMBER	VALUE	SIZE(L×W×T)
C_{IN}, C_L	Murata	GRM155C71A105KE11D	1.0μF/10V	1.0×0.5×0.6(mm)
	Murata	GRM033D70J105ME01D	1.0μF/6.3V 2parallel	0.6×0.3×0.39(mm)
	Murata	GRM033R60J225ME47D	2.2μF/6.3V	0.6×0.3×0.39(mm)

(*1) Use a capacitor according to the DC bias usage conditions (ambient temperature, input / output voltage) so that the effective capacitance value is equal to or higher than the recommended component.
For C_L, the output voltage may become unstable if a capacitor with a low effective capacitance value is used.
Also, if large-capacity capacitors such as electrolytic capacitors are connected in parallel, the inrush current may increase at startup and the output voltage may become unstable.

■OPERATIONAL EXPLANATION

The XC6241 series controls the output voltage by means of a scheme in which the error amplifier compares the voltage divided by R1 and R2 connected to the V_{OUT} pin with the voltage of the internal reference power supply. The output signal from the error amplifier makes the Pch MOSFET connected to the V_{IN} pin drive, and negative feedback is applied to stabilize the output voltage.

The GO function monitors the output current and switches IC's supply current according to the level of output current.

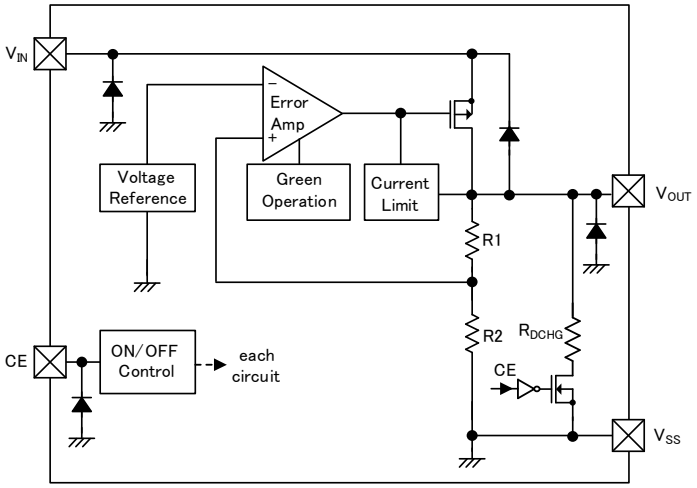

※Diodes inside the circuits are ESD protection diodes and parasitic diodes.

<Green Operation (GO) Function >

The GO function enables the IC to automatically switch the supply current to the high speed (HS) mode or the power save (PS) mode according to the level of output current. While having both high-speed operation and low supply current state, the series can acquire high efficiency.

At the HS/PS automatic switching mode (GO function), the switching point of the HS mode and the PS mode is being fixed inside the IC. When the output current becomes I_{GOR} 0.5mA (MIN.) or below, the mode changes automatically to the PS mode and it can reduce supply current in light load.

Also, when the output current becomes I_{GO} 10mA (MAX.) or more, the mode changes automatically to the HS mode and the IC becomes high speed operation. When the input voltage is lower than the set output voltage or the input / output voltage difference is small, it may operate in the HS mode regardless of the output current.

In addition, when the output current fluctuates from a heavy load (HS mode operating range 10mA or more) to a light load (PS mode operating range 0.5mA or less), the IC temporarily reduces the responsiveness to prevent IC malfunction and to keep the output stability.

In addition, when the output current fluctuates from a heavy load to a light load and the mode changes from HS mode to PS mode, the PS mode is forcibly maintained for 10ms to stabilize the output voltage.

<CE Function>

The XC6241 series allows stopping of the IC internal circuit by a CE pin signal. In shutdown mode, output at the V_{OUT} pin will be pulled down to the V_{SS} level via R1 & R2.

The A type has the C_L auto-discharge function, which can quickly discharge the electric charge at the output capacitor (C_L) when IC is shutdown mode and power is supplied to the V_{IN} pin.

The output voltage becomes unstable, when the CE pin is open. Please input a certain voltage within an electrical characteristic into CE pin.

If this IC is used with the correct CE voltage for the CE pin, the logic is fixed and the IC will operate normally. However, supply current may increase as a result of through current 0.16μA(TYP.) in the IC's internal circuit when medium voltage is input to the CE pin.

■OPERATIONAL EXPLANATION(Continued)

< Current Limit, Short-Circuit Protection>

The XC6241 series' foldback circuit operates as an output current of the output pin.

When the output current reaches I_{LIM} (TYP. 250mA), the fixed current limiter circuit operates and the output voltage drops. As a result of this drop in output voltage, the foldback circuit operates, output voltage drops further and output current decreases. When the output pin is shorted, the output current is I_{SHORT} (TYP. 15mA) with constant current limit and can be used safely by short-circuit.

As a result, it can be started without any problem even when a negative voltage is applied to the output voltage due to the influence of the start sequence.

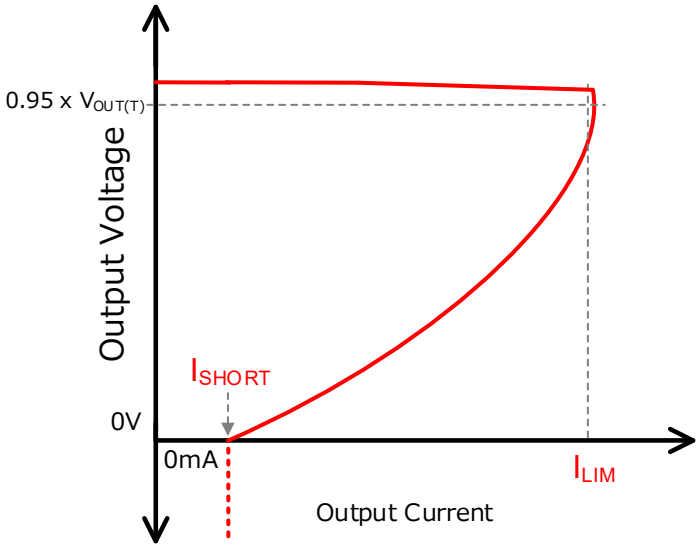

<C_L Auto-Discharge Function>

The A type has the C_L auto-discharge function, which can quickly discharge the electric charge at the output capacitor (C_L).

An Nch MOSFET connect between the V_{OUT} pin and the V_{SS} pin, and the Nch MOSFET quickly discharge the electric charge in C_L when a low signal input to the CE pin.

Discharge time of the C_L and output voltage is determined by a C_L auto-discharge resistor value R_{DCHG} (TYP. 280Ω@V_{IN}=6.0V) and an output capacitor value. Output voltage after starting discharge can be calculated by the following formula.

$$V = V_{OUT(E)} \times e^{-t/\tau}$$

V	: Output voltage after starting discharge
$V_{OUT(E)}$	: Output voltage
t	: Discharge time
τ	: $R_{DCHG} \times C_L$
C_L	: Capacitance connected V_{OUT} pin
R_{DCHG}	: Output discharge resistor (C_L Discharge Resistance)

It can be expanded on "t",

$$t = \tau \ln(V_{OUT(E)} / V)$$

Discharge time can be calculated by the above formula.

■ NOTES ON USE

1. For temporary, transitional voltage drop or voltage rising phenomenon, the IC is liable to malfunction should the ratings be exceeded. Also, if the IC used under conditions outside the recommended operating range, the IC may not operate normally or may cause deterioration.

2. Where wiring impedance is high, operations may become unstable due to noise and/or phase lag depending on output current. Please strengthen V_{IN} and V_{SS} wiring in particular.

3. The input capacitor (C_{IN}) and the output capacitor (C_L) should be placed to the IC as close as possible. Capacitances of these capacitors (C_{IN}, C_L) are decreased by the influences of bias voltage and ambient temperature. Care shall be taken for capacitor selection to ensure stability of phase compensation from the point of Capacitance and ESR influence.

4. The function of Green Operation has the specific threshold current for switching the operation mode according to the output load. In the range of 0.5mA to 10mA, it is unclear which mode to operate due to IC variations. To be fixed the operation mode, we would recommend user designs that stable operation range is over 10mA as HS mode and under 0.5mA as PS mode.

5. When the input voltage is lower than the set output voltage or the input / output voltage difference is extremely small, it may operate in the HS mode regardless of the output current. At this time, ripple voltage may be shown by switching the operation mode if the load current is a light load in PS mode. If it is necessary, please consider increasing the output capacitor to compensate for ripple voltage.

6. When transitioning from HS mode to PS mode due to a fluctuate from heavy load to light load, PS mode is forcibly maintained for 10ms. During this time, the transition to HS mode is not possible, so the output voltage may fluctuate significantly due to load fluctuations. If it is necessary, please consider increasing the output capacitor to compensate for ripple voltage.

7. The current limit function is operating even the output is started. If the IC is started with a current load that exceeds the fold-back curve, a start failure may occur due to the current limiting characteristics. In this case, after the output voltage rises to near the set output voltage, please control the sequence so that the load current is pulled.

8. Torex places an importance on improving our products and their reliabilities. We request that users incorporate fail-safe designs and post-aging prevention treatment when using Torex products in their systems.

■TYPICAL PERFORMANCE CHARACTERISTICS

(1) Output Voltage vs. Output Current

XC6241(V_{OUT}=1.8V)

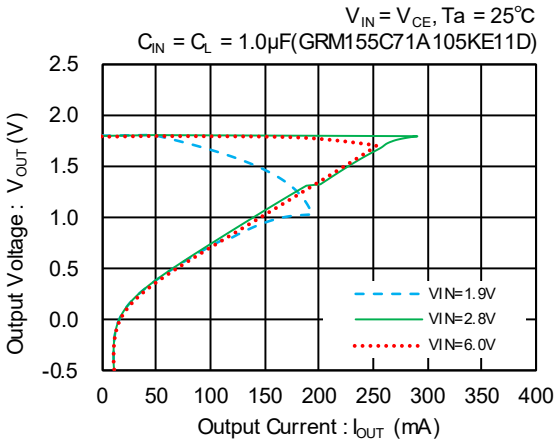

XC6241(V_{OUT}=1.8V)

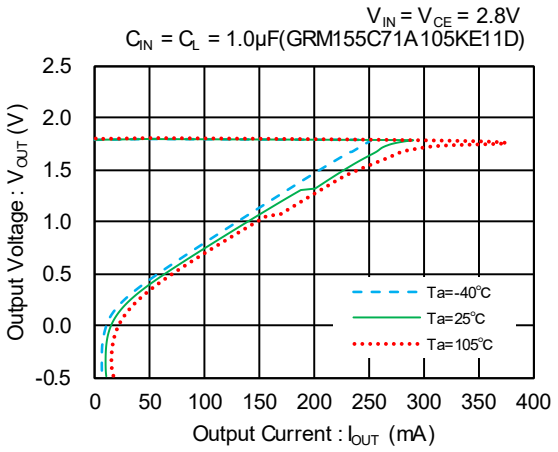

XC6241(V_{OUT}=3.3V)

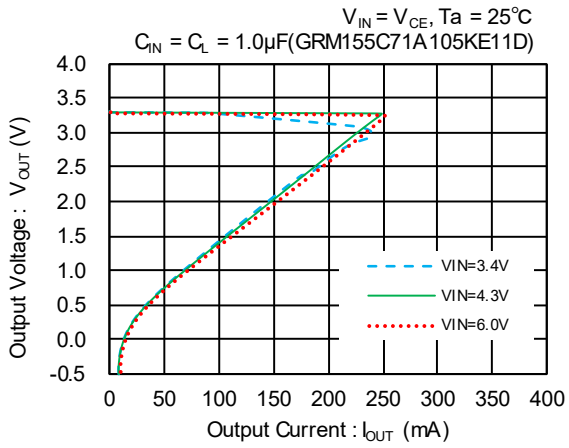

XC6241(V_{OUT}=3.3V)

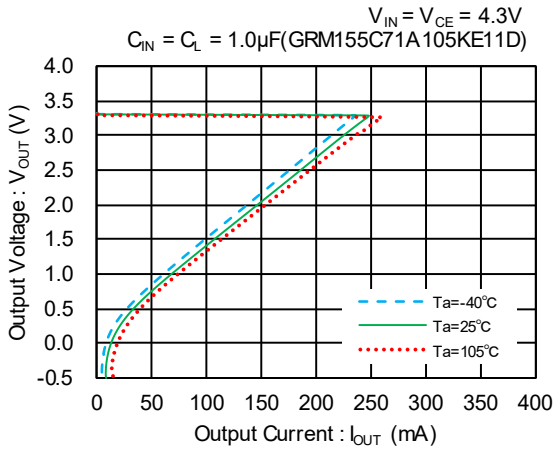

XC6241(V_{OUT}=5.0V)

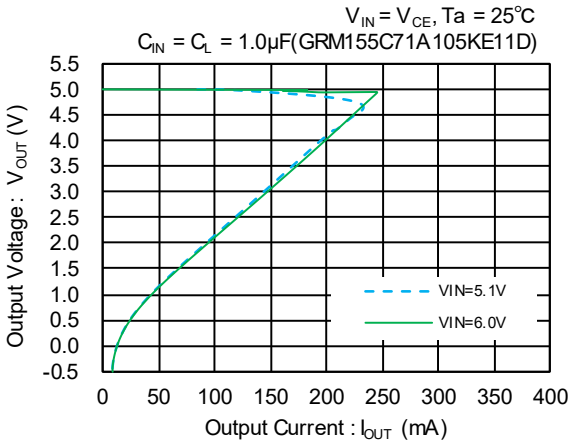

XC6241(V_{OUT}=5.0V)

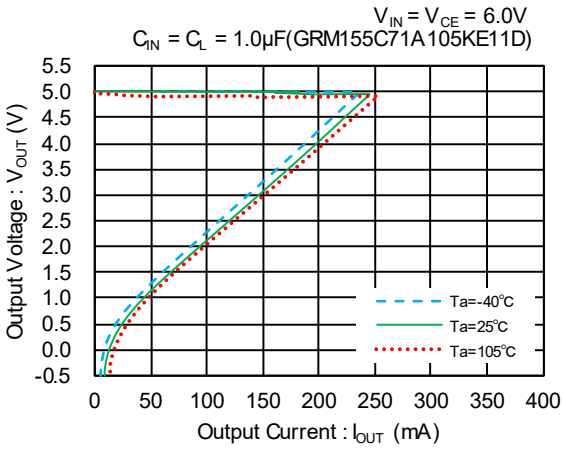

■TYPICAL PERFORMANCE CHARACTERISTICS (Continued)

(2) Output Voltage vs. Input Voltage

XC6241(V_{OUT}=1.8V)

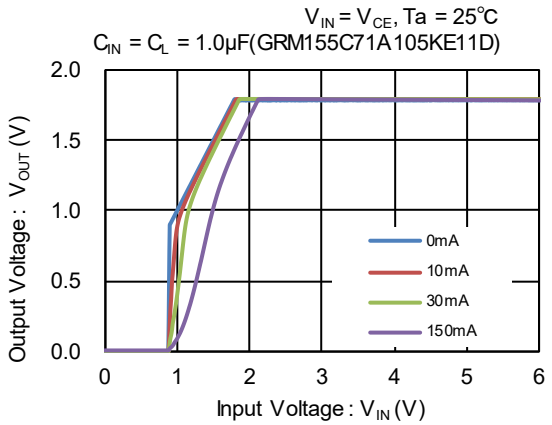

XC6241(V_{OUT}=1.8V)

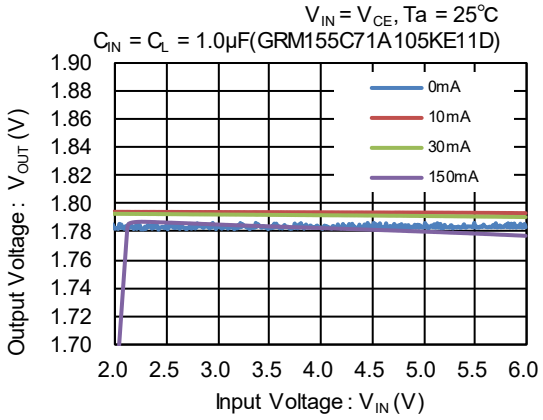

XC6241(V_{OUT}=3.3V)

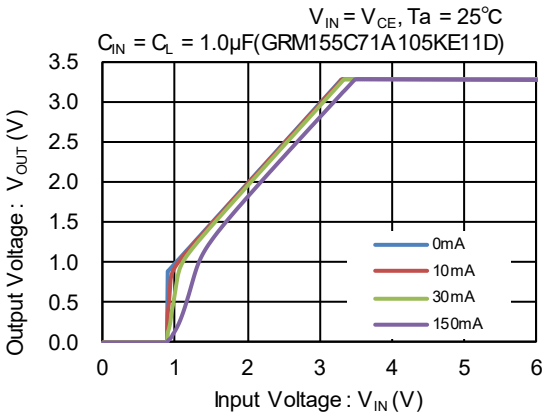

XC6241(V_{OUT}=3.3V)

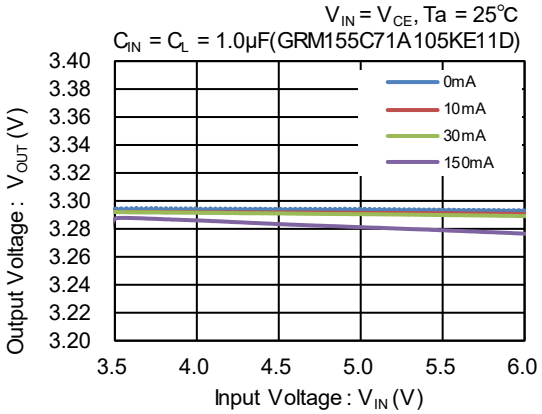

XC6241(V_{OUT}=5.0V)

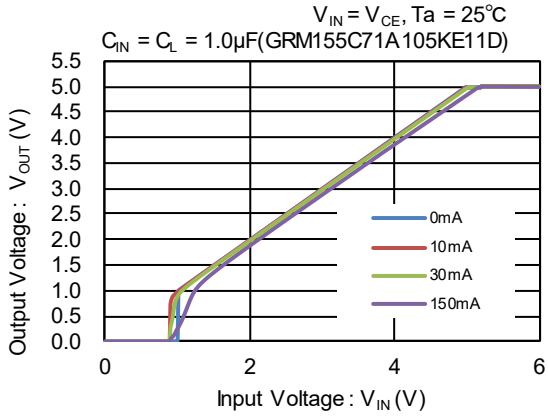

XC6241(V_{OUT}=5.0V)

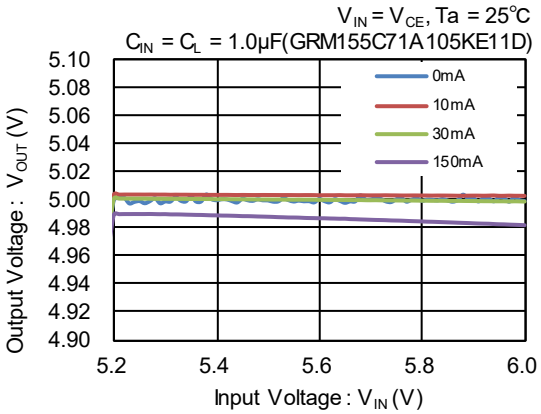

■TYPICAL PERFORMANCE CHARACTERISTICS (Continued)

(3) Dropout Voltage vs. Output Current

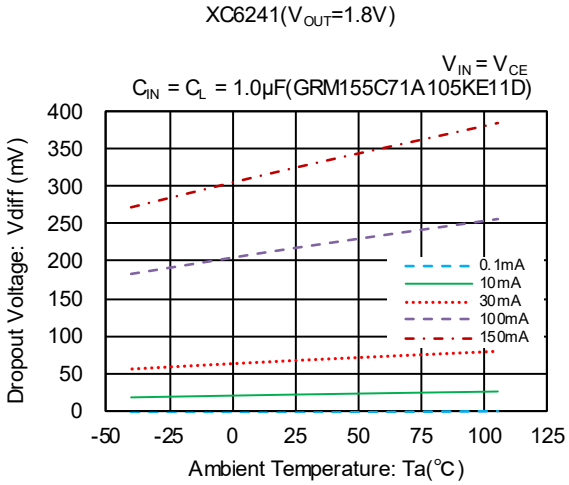

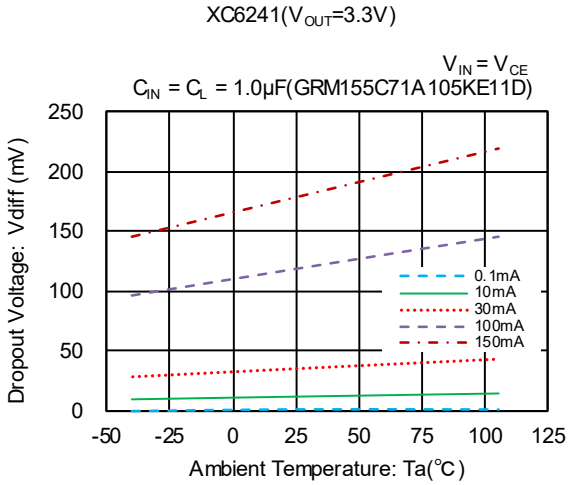

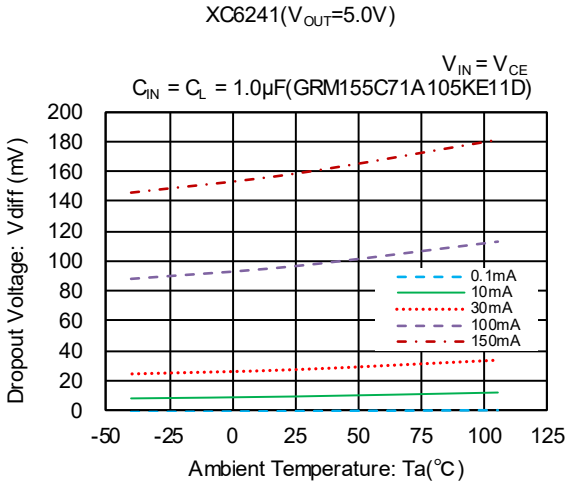

■TYPICAL PERFORMANCE CHARACTERISTICS (Continued)

(4) Dropout Voltage vs. Ambient Temperature

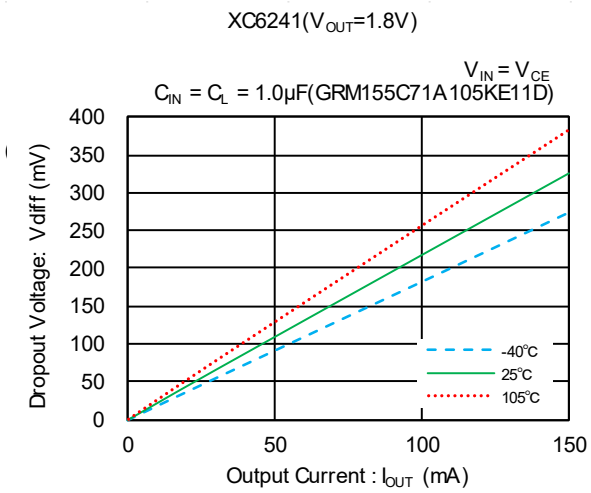

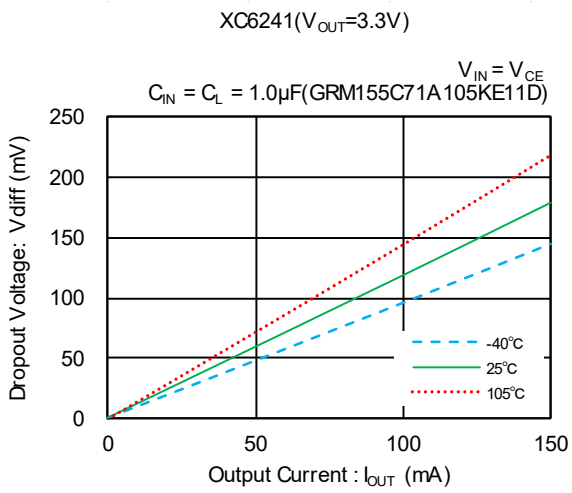

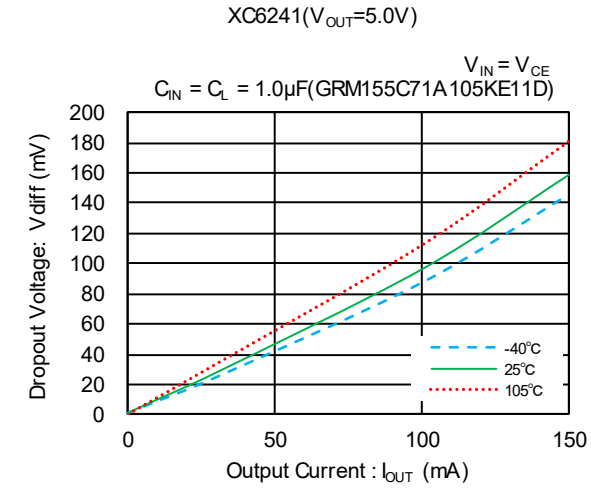

■TYPICAL PERFORMANCE CHARACTERISTICS (Continued)

(5) Output Voltage vs. Ambient Temperature

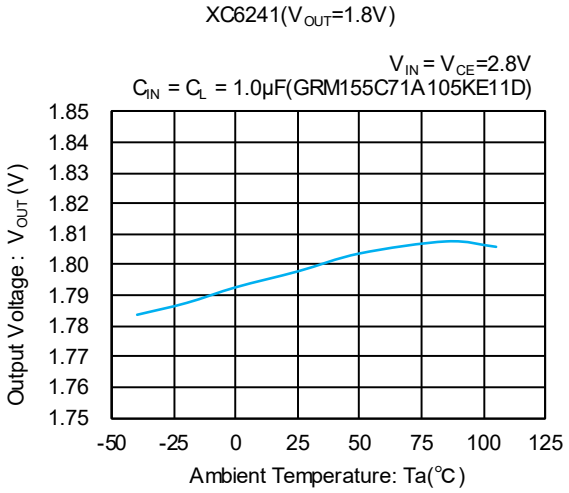

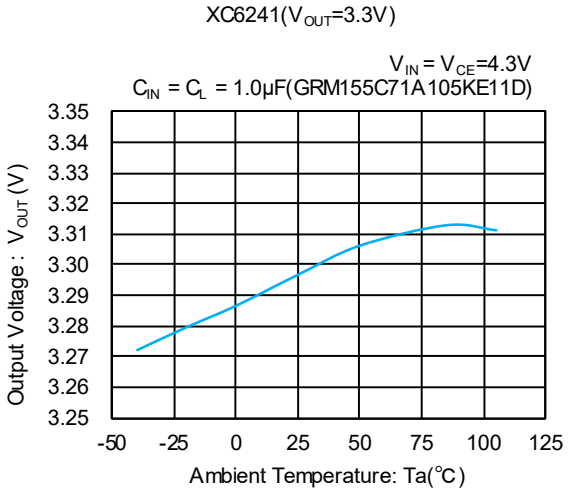

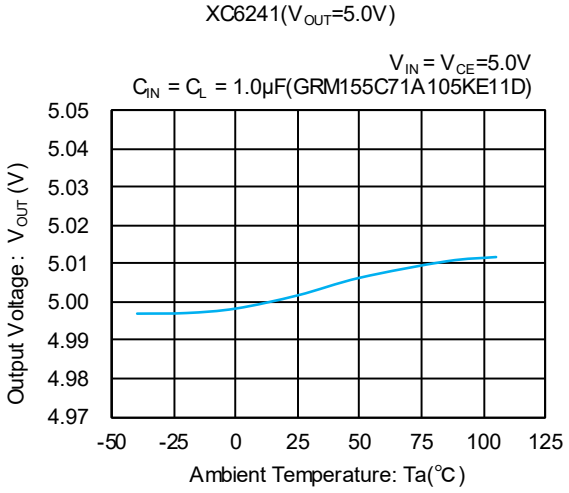

■TYPICAL PERFORMANCE CHARACTERISTICS (Continued)

(6) Supply Current vs. Input Voltage

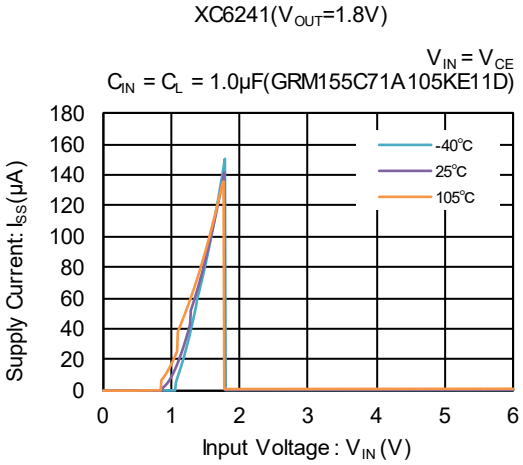

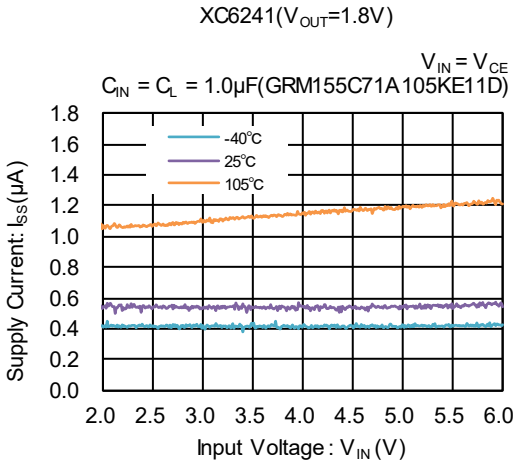

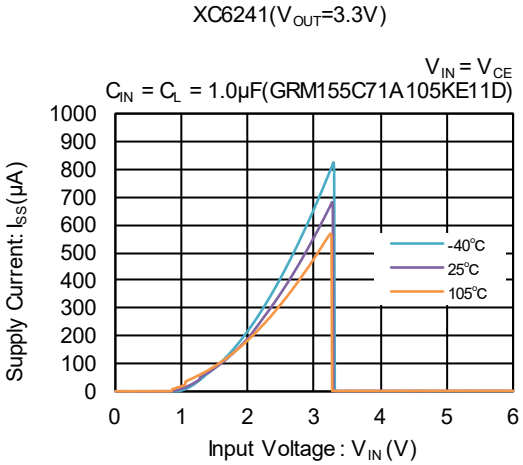

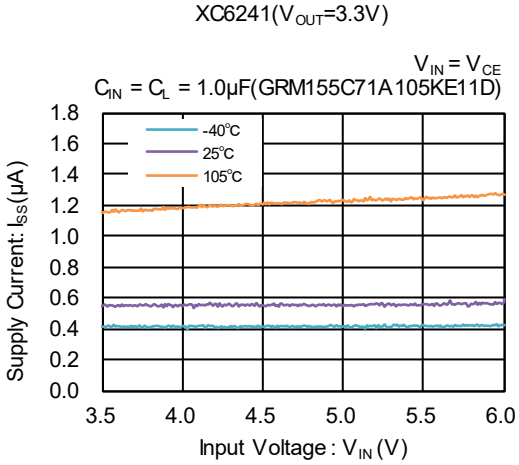

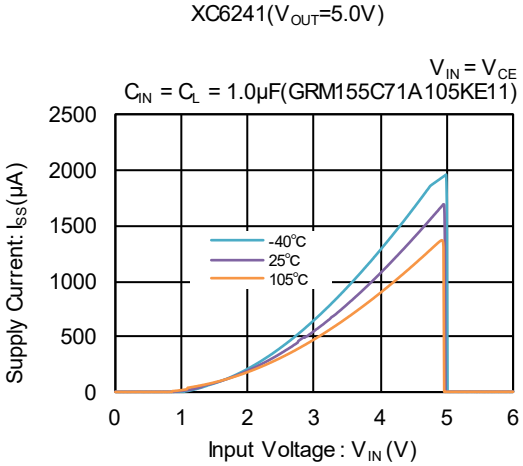

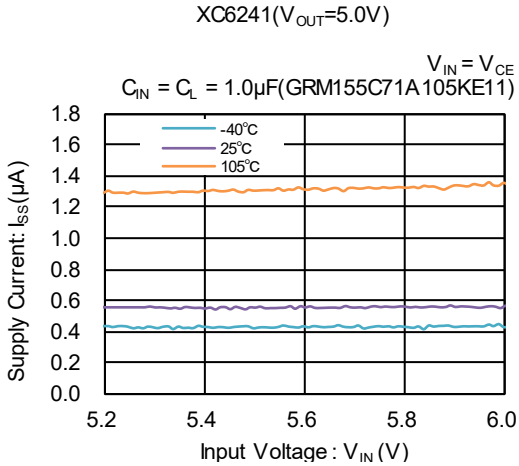

■TYPICAL PERFORMANCE CHARACTERISTICS (Continued)

(6) Supply Current vs. Input Voltage (Continued)

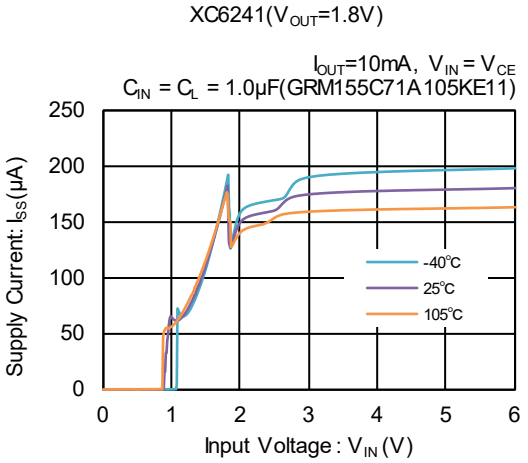

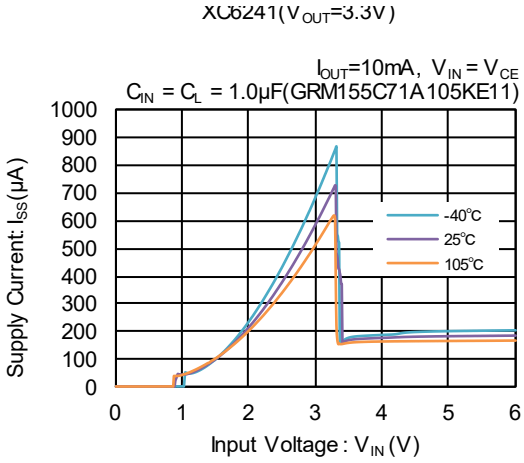

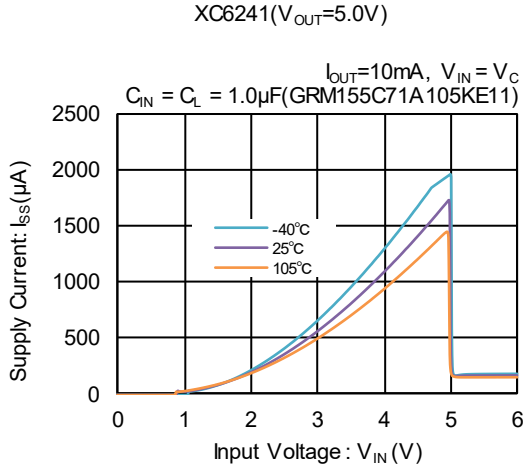

(7) Supply Current vs. Ambient Temperature

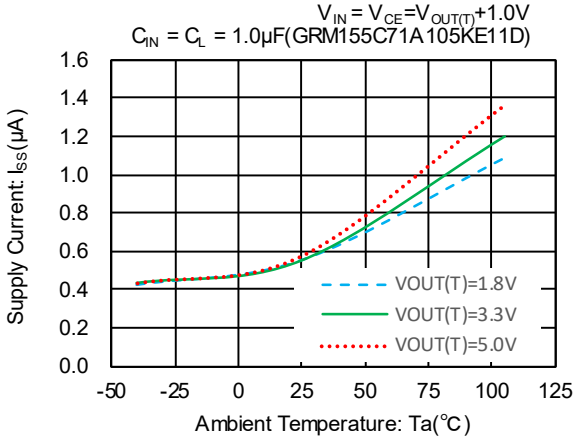

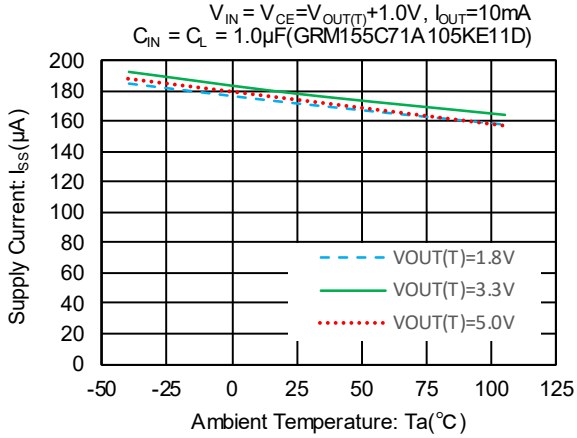

■TYPICAL PERFORMANCE CHARACTERISTICS (Continued)

(8) Load Transient Response

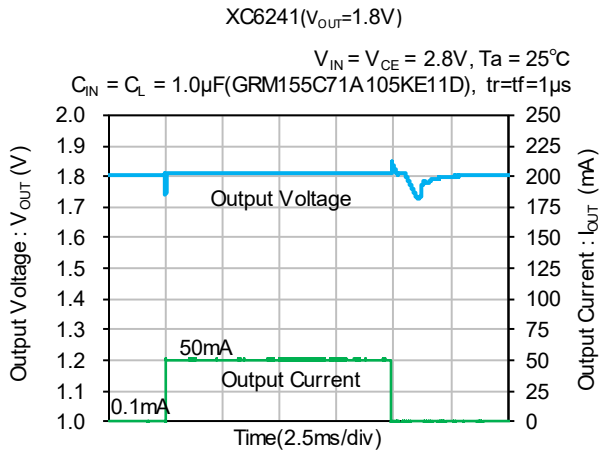

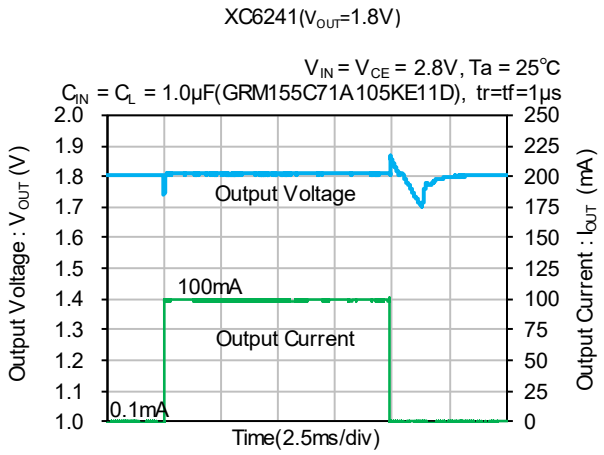

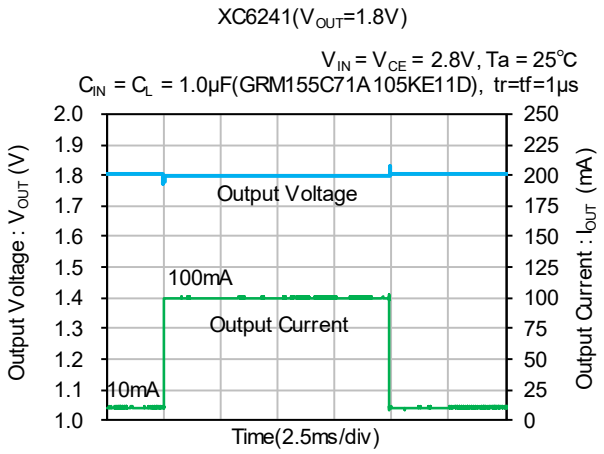

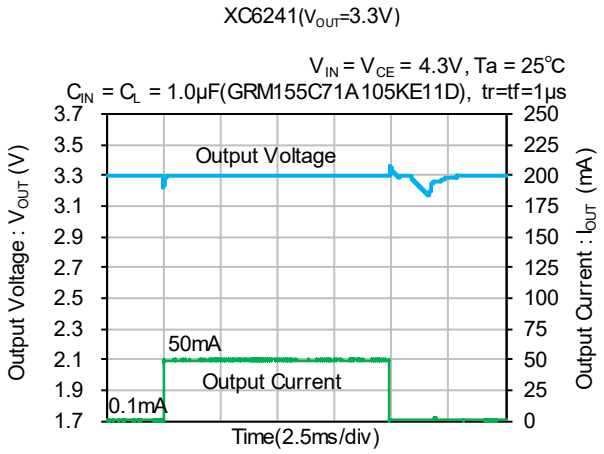

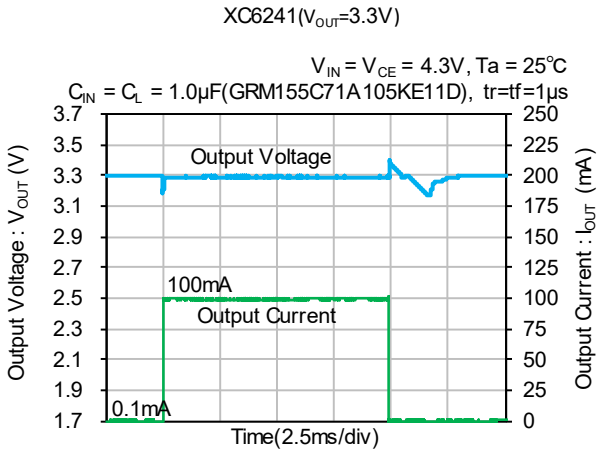

■TYPICAL PERFORMANCE CHARACTERISTICS (Continued)

(8) Load Transient Response (Continued)

XC6241(V_{OUT}=3.3V)

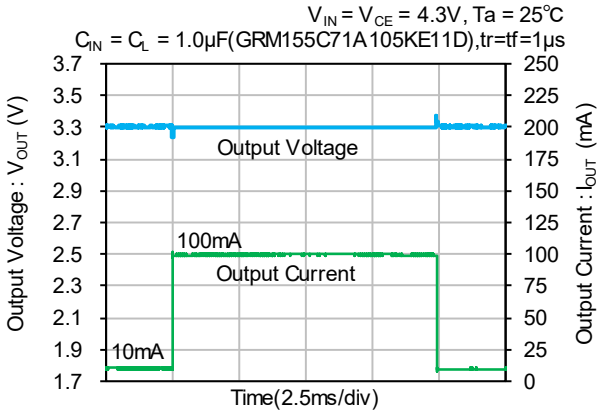

XC6241(V_{OUT}=5.0V)

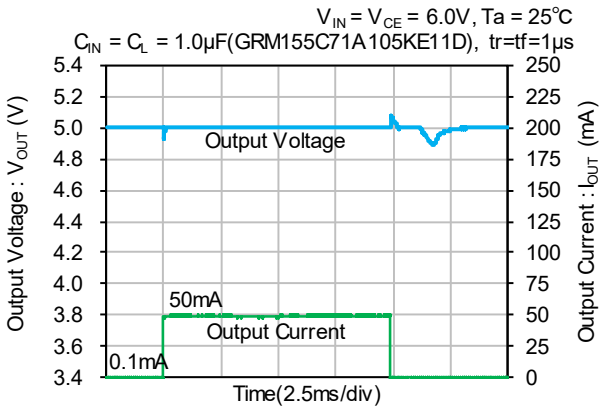

XC6241(V_{OUT}=5.0V)

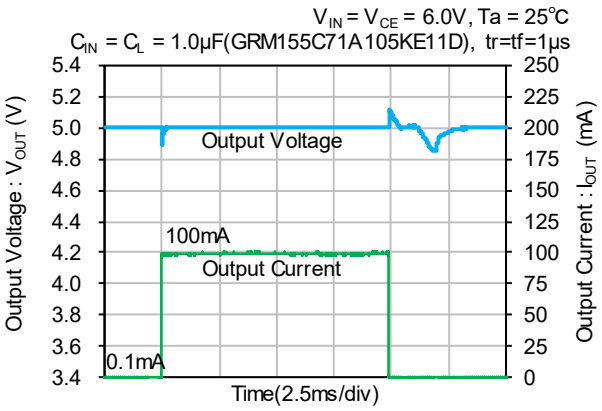

XC6241(V_{OUT}=5.0V)

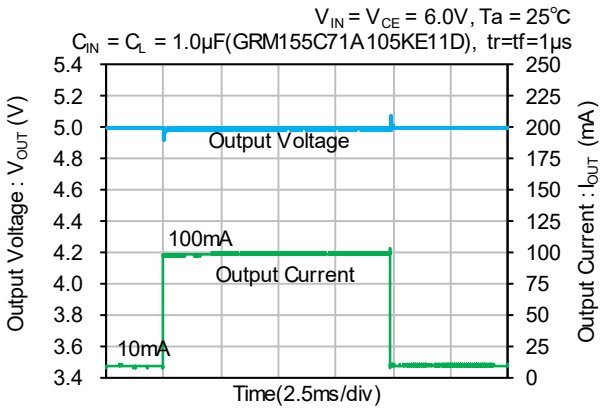

■TYPICAL PERFORMANCE CHARACTERISTICS (Continued)

(9) Line Transient Response

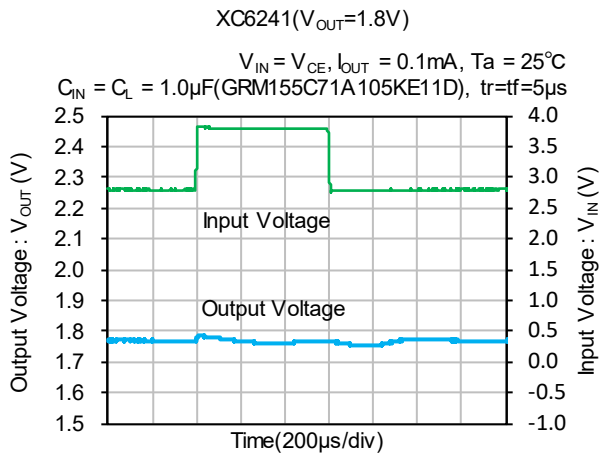

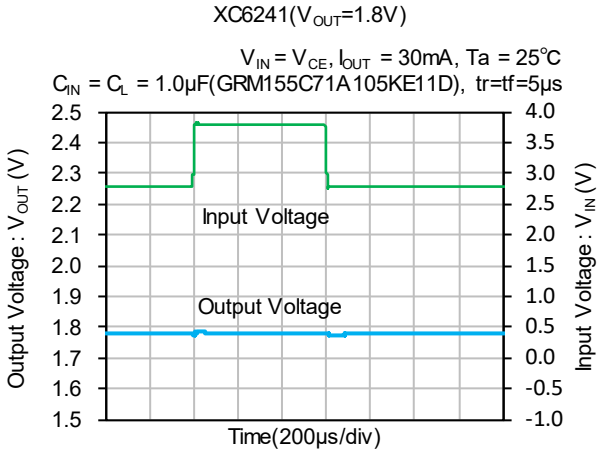

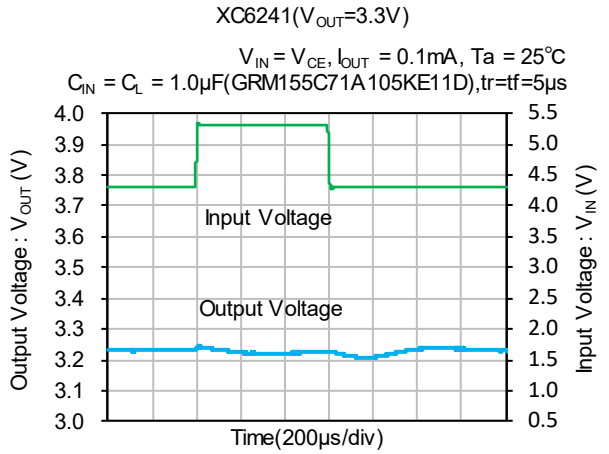

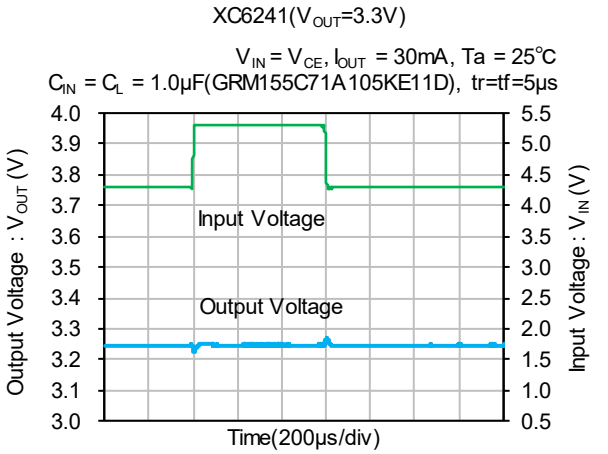

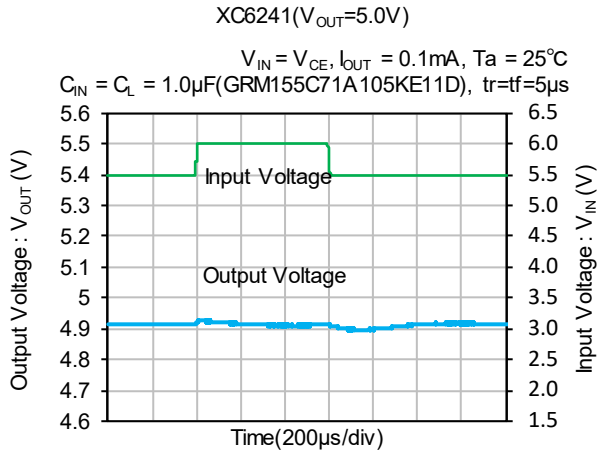

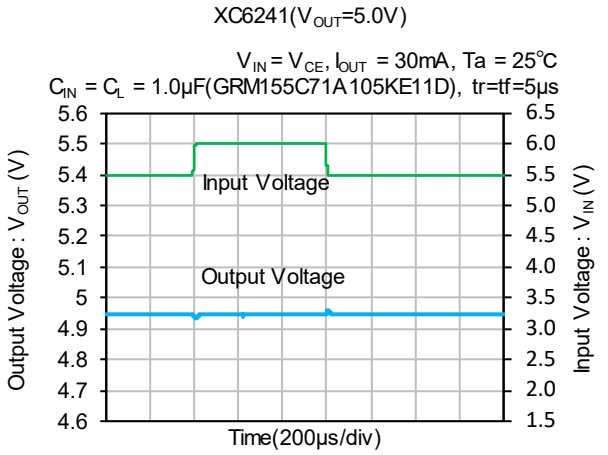

■TYPICAL PERFORMANCE CHARACTERISTICS (Continued)

(10) Turn-On Response

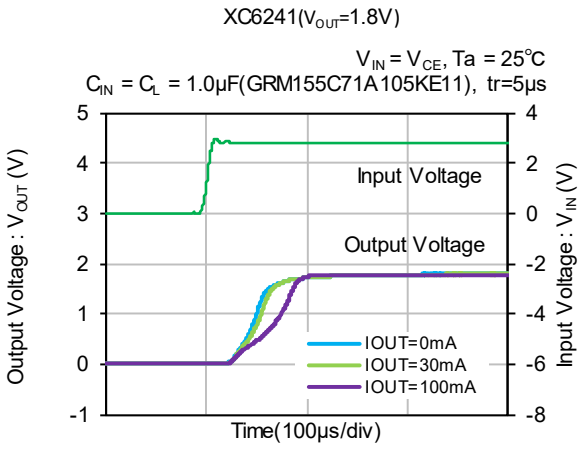

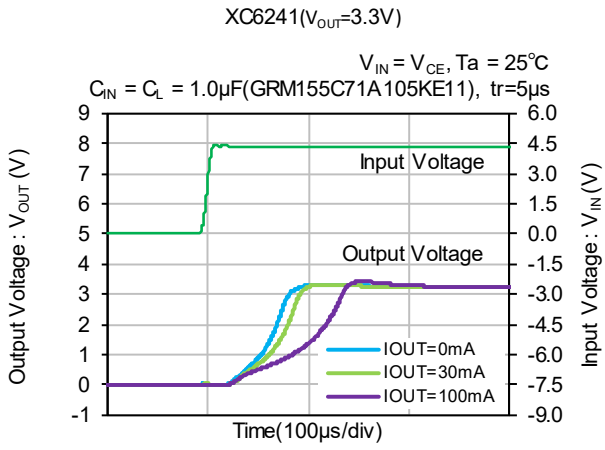

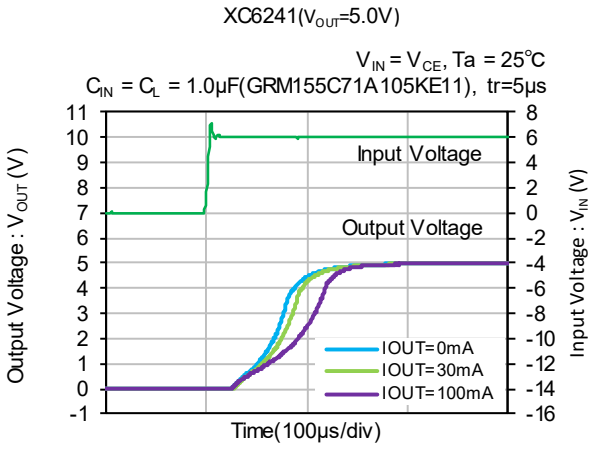

■TYPICAL PERFORMANCE CHARACTERISTICS (Continued)

(11) CE Transient Response

XC6241(V_{OUT}=1.8V)

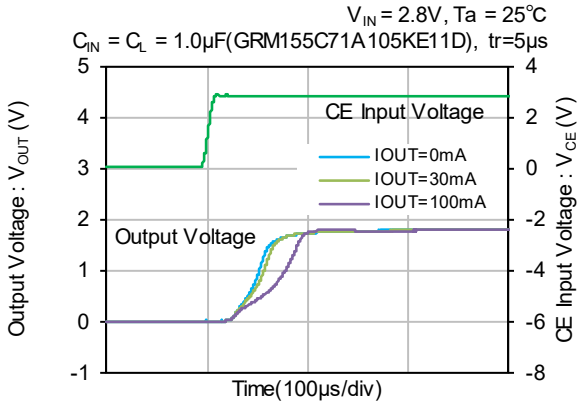

XC6241A(V_{OUT}=1.8V)

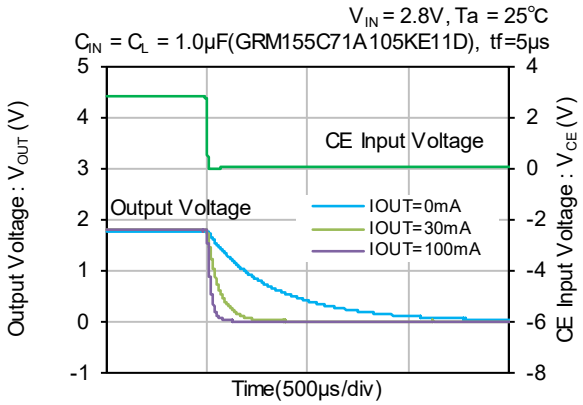

XC6241(V_{OUT}=3.3V)

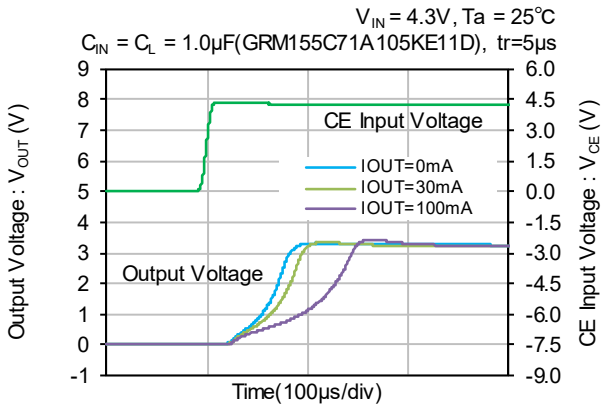

XC6241A(V_{OUT}=3.3V)

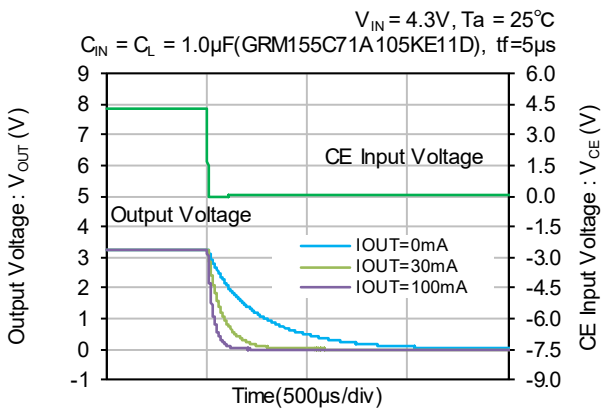

XC6241(V_{OUT}=5.0V)

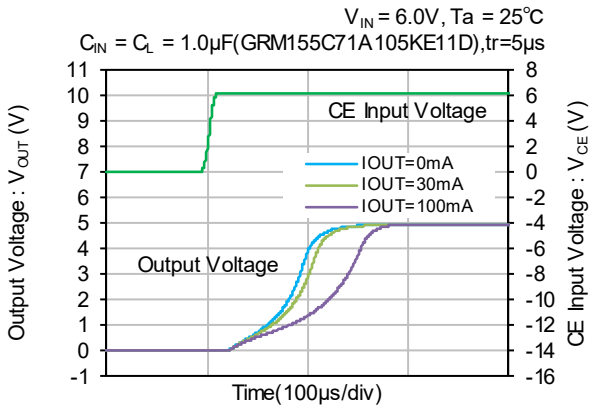

XC6241A(V_{OUT}=5.0V)

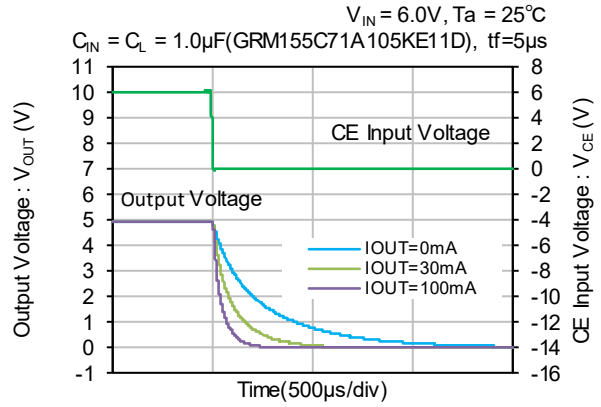

■TYPICAL PERFORMANCE CHARACTERISTICS (Continued)

(12) Inrush Current Response

XC6241(V_{OUT}=1.8V)

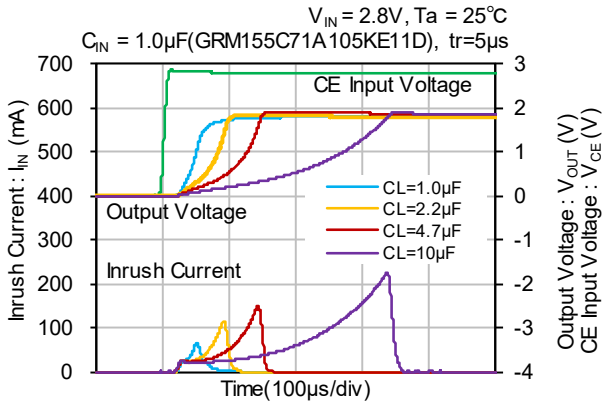

XC6241(V_{OUT}=3.3V)

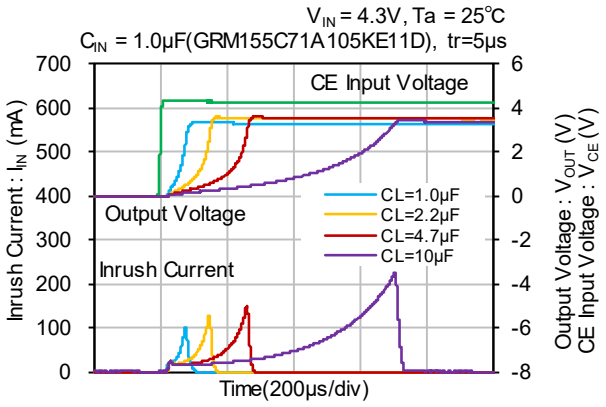

XC6241(V_{OUT}=5.0V)

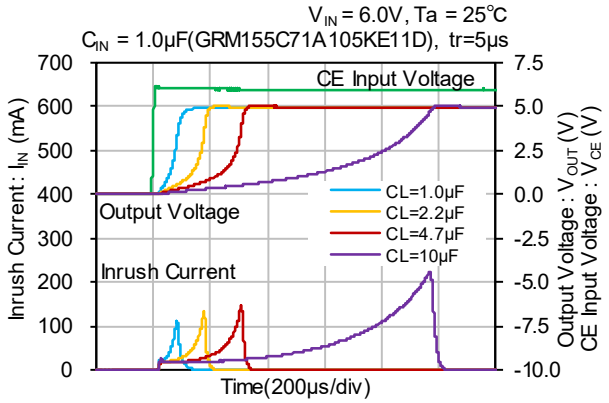

■TYPICAL PERFORMANCE CHARACTERISTICS (Continued)

(13) Ripple Rejection: PSRR

XC6241 (V_{OUT}=1.8V)

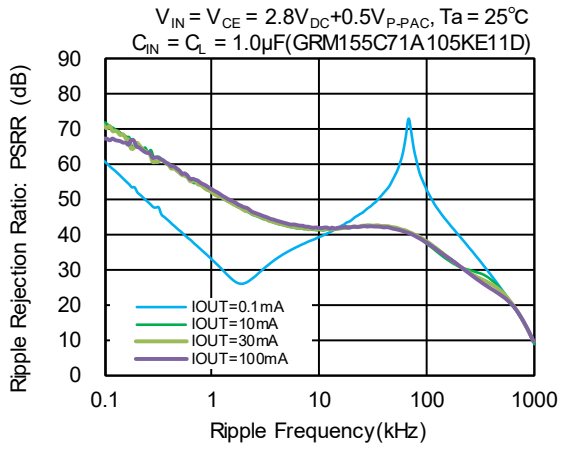

XC6241 (V_{OUT}=3.3V)

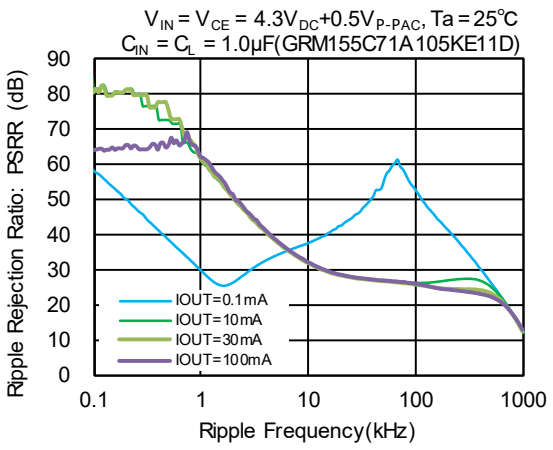

XC6241 (V_{OUT}=5.0V)

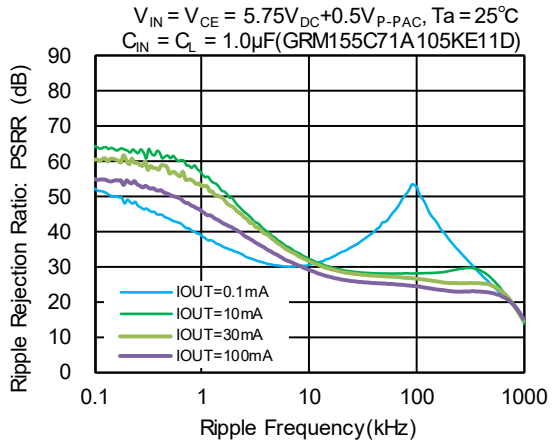

■PACKAGING INFORMATION

For the latest package information go to, www.torexsemi.com/technical-support/packages

PACKAGE	OUTLINE / LAND PATTERN	THERMAL CHARACTERISTICS
SSOT-24	SSOT-24 PKG	SSOT-24 Power Dissipation
USPQ-4B05	USPQ-4B05 PKG	USPQ-4B05 Power Dissipation

■MARKING RULE

●USPQ-4B05

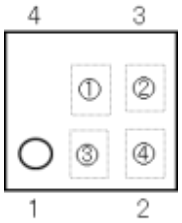

① represents type and the second decimal place of the output voltage

Type	SYMBOL	Output Voltage Range(V)	Product Series
With CE function and CL Auto-Discharge	A	1.20～2.15	XC6241A***9-G
	B	2.20～3.15	
	C	3.20～4.15	
	D	4.20～5.00	
With CE function	E	1.20～2.15	XC6241B***9-G
	F	2.20～3.15	
	H	3.20～4.15	
	K	4.20～5.00	

② represents output voltage

SYMBOL	Output Voltage(V)				SYMBOL	Output Voltage(V)				SYMBOL	Output Voltage(V)			
A	1.20	2.20	3.20	4.20	K	1.55	2.55	3.55	4.55	T	1.90	2.90	3.90	4.90
B	1.25	2.25	3.25	4.25	L	1.60	2.60	3.60	4.60	U	1.95	2.95	3.95	4.95
C	1.30	2.30	3.30	4.30	M	1.65	2.65	3.65	4.65	V	2.00	3.00	4.00	5.00
D	1.35	2.35	3.35	4.35	N	1.70	2.70	3.70	4.70	X	2.05	3.05	4.05	-
E	1.40	2.40	3.40	4.40	P	1.75	2.75	3.75	4.75	Y	2.10	3.10	4.10	-
F	1.45	2.45	3.45	4.45	R	1.80	2.80	3.80	4.80	Z	2.15	3.15	4.15	-
H	1.50	2.50	3.50	4.50	S	1.85	2.85	3.85	4.85					

③,④ represents production lot number.01～09, 0A～0Z, 11～9Z, A1～A9, AA～AZ, B1～ZZ in order.
(G, I, J, O, Q, W excluded) * No character inversion used.

■MARKING RULE

●SSOT-24

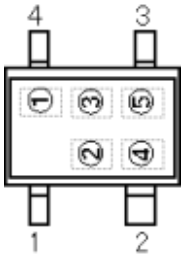

① represents type

Type	SYMBOL	Product Series
With CE function and CL Auto-Discharge	A	XC6241A***N-G
With CE function	B	XC6241B***N-G

② represents the second decimal place of the output voltage

SYMBOL	Output Voltage Range(V)	Product Series
A	1.20～2.15	XC6241*121NR-G ~ XC6241*21BNR-G
B	2.20～3.15	XC6241*221NR-G ~ XC6241*31BNR-G
C	3.20～4.15	XC6241*321NR-G ~ XC6241*41BNR-G
D	4.20～5.00	XC6241*421NR-G ~ XC6241*501NR-G

③ represents output voltage

SYMBOL	Output Voltage(V)				SYMBOL	Output Voltage(V)				SYMBOL	Output Voltage(V)			
A	1.20	2.20	3.20	4.20	K	1.55	2.55	3.55	4.55	T	1.90	2.90	3.90	4.90
B	1.25	2.25	3.25	4.25	L	1.60	2.60	3.60	4.60	U	1.95	2.95	3.95	4.95
C	1.30	2.30	3.30	4.30	M	1.65	2.65	3.65	4.65	V	2.00	3.00	4.00	5.00
D	1.35	2.35	3.35	4.35	N	1.70	2.70	3.70	4.70	X	2.05	3.05	4.05	-
E	1.40	2.40	3.40	4.40	P	1.75	2.75	3.75	4.75	Y	2.10	3.10	4.10	-
F	1.45	2.45	3.45	4.45	R	1.80	2.80	3.80	4.80	Z	2.15	3.15	4.15	-
H	1.50	2.50	3.50	4.50	S	1.85	2.85	3.85	4.85					

④,⑤ represents production lot number.01～09, 0A～0Z, 11～9Z, A1～A9, AA～AZ, B1～ZZ in order.
(G, I, J, O, Q, W excluded) * No character inversion used.

1. The product and product specifications contained herein are subject to change without notice to improve performance characteristics. Consult us, or our representatives before use, to confirm that the information in this datasheet is up to date.

2. The information in this datasheet is intended to illustrate the operation and characteristics of our products. We neither make warranties or representations with respect to the accuracy or completeness of the information contained in this datasheet nor grant any license to any intellectual property rights of ours or any third party concerning with the information in this datasheet.

3. Applicable export control laws and regulations should be complied and the procedures required by such laws and regulations should also be followed, when the product or any information contained in this datasheet is exported.

4. The product is neither intended nor warranted for use in equipment of systems which require extremely high levels of quality and/or reliability and/or a malfunction or failure which may cause loss of human life, bodily injury, serious property damage including but not limited to devices or equipment used in 1) nuclear facilities, 2) aerospace industry, 3) medical facilities, 4) automobile industry and other transportation industry and 5) safety devices and safety equipment to control combustions and explosions. Do not use the product for the above use unless agreed by us in writing in advance.

5. Although we make continuous efforts to improve the quality and reliability of our products; nevertheless Semiconductors are likely to fail with a certain probability. So in order to prevent personal injury and/or property damage resulting from such failure, customers are required to incorporate adequate safety measures in their designs, such as system fail safes, redundancy and fire prevention features.

6. Our products are not designed to be Radiation-resistant.

7. Please use the product listed in this datasheet within the specified ranges.

8. We assume no responsibility for damage or loss due to abnormal use.

9. All rights reserved. No part of this datasheet may be copied or reproduced unless agreed by Torex Semiconductor Ltd in writing in advance.

TOREX SEMICONDUCTOR LTD.